TRASCO® Couplings

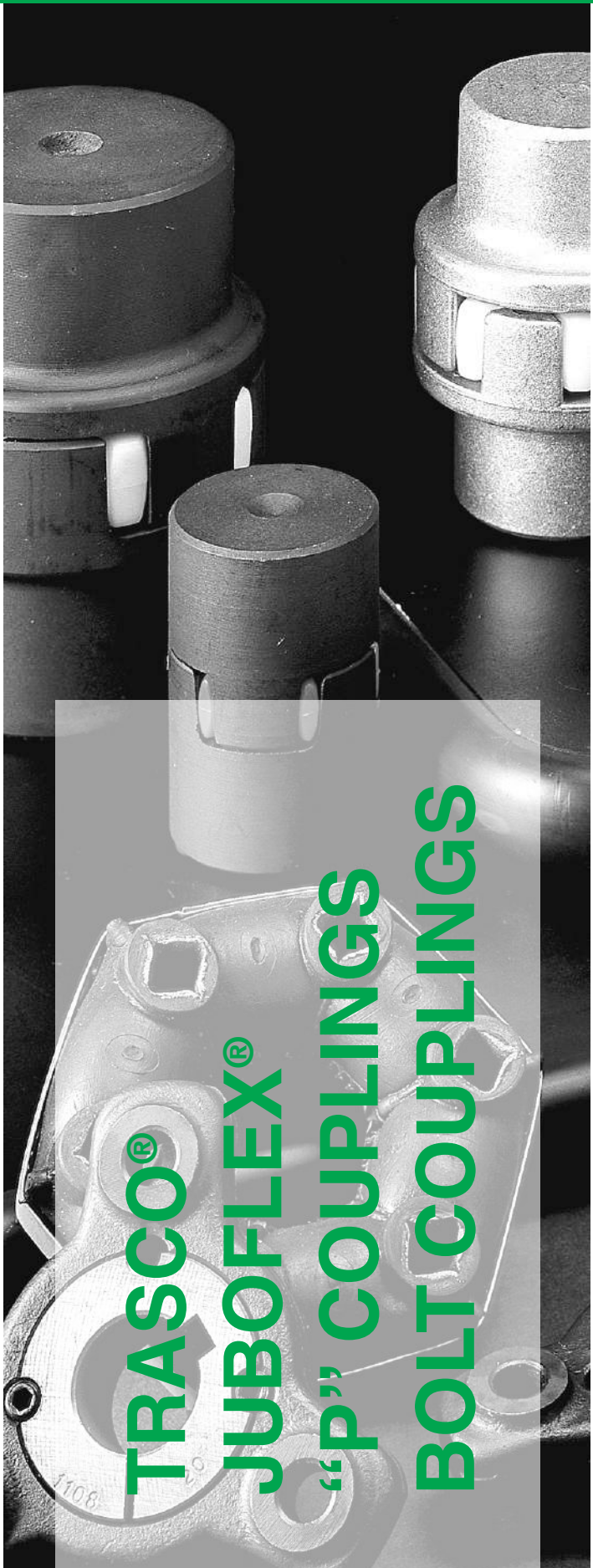

TRASCO® JUBOFLEX® "P" COUPLINGS BOLT COUPLINGS

Contents

TRASCO® couplings

Description

TRASCO® flexible coupling is the flexible and omocinetic coupling that assures the best performance in relation to the physical space occupied in its class.
It has a very compact design and allows safe power transmission by absorbing peak loads and torsional vibrations.
Moreover, the elastic design of the polyurethane gear ring compensates for angular and radial misalignments and also absorbs small shaft length variation.
The involute profile of the gear ring teeth prevents high stress concentrations on reduced surfaces and the crowned profile and avoids the transmission of axial stress.
The high duty factor of TRASCO® couplings is due to the fact that the elastic element works under compression and never under flexion.
TRASCO® couplings are suitable for working in both horizontal and in vertical positions and easily support any load variation or reversal motion. The two coupling halves are electrically insulated from each other.

"**A**" Execution

"**AL**" Execution

"**AR**" Spider

"**B**" Execution

"**BL**" Execution

ATEX Directive 2014/34/EU

It is possible to ask for specific certification for use in hazardous area according to ATEX Directive 2014/34/EU. TRASCO® couplings are available with specific mounting/operating instruction manual and conformity. For information, please contact our technical office.

TRASCO® flexible couplings consist of two precision machined metal hubs and an elastic gear ring (spider) which is resistant to oils, chemical agents, and heat.
Hubs are available in cast iron GG25 or aluminum and, in case of special request, in steel or cast iron GGG40.

Each hub is available in version "A" and "B" (in standard or long hub "L" version) which can accommodate different size of bores, leaving unchanged the performance and the technical features.

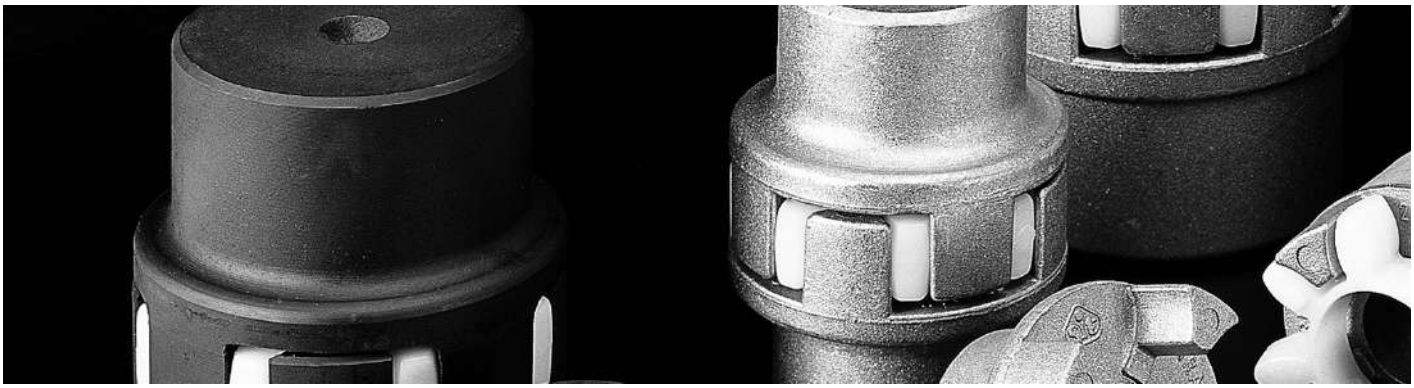

Spider

The gear ring is made of a particular polyurethane resin which shows great advantages in comparison to the standard polyurethanes available on the market.
The urethane compound of our polyurethane gear ring offers resistance to aging, hydrolysis, fatigue, and abrasion making it suitable for even the most demanding applications in high humidity conditions. It is self-dampening and shows a great resistance to the main chemical agents, acids, oils, and ozone.
Special types of gear rings are available in order to provide the right solution for each specific application covering a large range of temperatures and resisting specific chemical agents.

Standard spiders					
(Shore)	Color	Compound	Admissible Temperature [°C]		Applications
			on work	peaks	
92 Sh A	Yellow	Polyurethane	from - 40 to + 90	from - 50 to + 120	• the most of industrial application (low-mid power)
98 Sh A	Red	Polyurethane	from - 30 to + 90	from - 40 to + 120	• high torque – narrow angular misalignment – torsional rigidity
64 Sh D	Green	Polyurethane	from - 30 to + 110	from - 30 to + 130	• dampened areas – internal combustion engines

Spiders for special applications					
(Shore)	Color	Compound	Admissible Temperature [°C]		Applications
			on work	peaks	
80 Sh A	Blue	Polyurethane	from - 50 to + 80	from - 60 to + 120	• internal combustion engines / high dynamic solicitations / highly dampened areas
PA	Grey	Polyamide	from - 20 to + 110	from - 30 to + 150	• high torsion rigidity / high temperature areas / high resistance

Available on request spiders with different compound for special applications:

- High working temperature
- Heavy working conditions
- Heavy environment conditions
- Resistance to specific chemicals

TRASCO® coupling sizing as per DIN 740/2

TRASCO® coupling sizing is made according to DIN 740/2. Couplings must be selected to ensure that the maximum admissible torque is never exceeded during operation.
It is necessary to have correct sizing, so that all conditions hereunder are respected.

1) Verify the nominal torque
The nominal torque of the coupling must be greater than or equal to the nominal torque of the drive multiplied by the temperature safety factor.

$$T_{KN} \geq T_N \cdot S_\theta \quad [Nm]$$

Note that:

$$T_N = 9550 \frac{P_N}{n} \quad [Nm]$$

Where P_N is the motor nominal power in kW.

2) Verify the maximum torque
The max torque of the coupling must be greater than or equal to the starting torque Ts multiplied by the safety factors S_θ, S_Z, S_u where S_u is the higher value between driver and driven units.

$$T_{Kmax} \geq T_S \cdot S_\theta \cdot S_Z \cdot S_u \quad [Nm]$$

3) Verify torque with reversal
In case of torque with reversals it must be verified that:

$$T_{KW} \geq T_W \cdot S_\theta \quad [Nm]$$

where *Tkw* = torque with reversal, which the coupling can bear, and *Tw* = torque variation of the drive.

In case of drives with high torsional vibrations (e.g. piston compressors, combustion engine) it is recommended to make a torsional vibration calculations in order to guarantee the correct functioning of the coupling. Please consult our technical office.

Shock load safety factor

Shock load type	S_U
Light	1,4
Medium	1,5
Hard	1,8

Temperature safety factor

T (°C)	–30°C / +30°C	+40°C	+60°C	+80°C
S_θ	1	1,2	1,4	1,8

Safety factor for frequency of starting

Starts/h	0÷100	101÷200	201÷400	401÷800
S_Z	1	1,2	1,4	1,6

Hub shaft connection check
Hub shaft connection must always be checked by the user. It is important to verify the maximum torque in the drive is lower than the torque which the hub shaft connection can bear. In case of keyway connection, it is important to verify the tensile strength of the hub material with the load which the keyway seat must transmit.

T_{KN}	Coupling nominal torque	Nm
T_{Kmax}	Coupling maximum torque	Nm
T_{KW}	Torque with reversal transmissible by the coupling	Nm
T_N	Motor nominal torque	Nm
T_S	Motor peak torque	Nm
T_W	Torque with reversal of the machine	Nm

S_θ	Temperature factor	
S_Z	Start frequency factor	
S_u	Motor or driven-side shock factor	
P_N	Motor nominal torque	kW
n	rpm	min^{-1}

Type of stress

Periodic

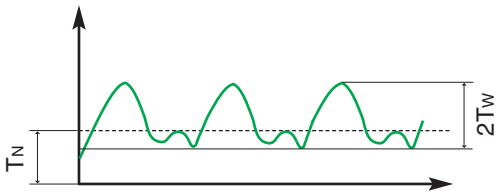

Harmonic

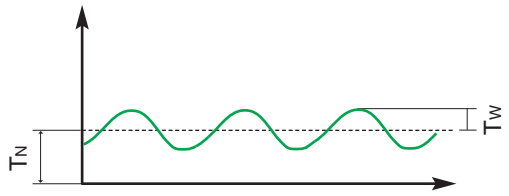

Misalignment

Size	ΔK_{aP} [mm]	ΔK_r [mm]	ΔK_w [°]
19/24	1,2	0,20	1°30’
24/32	1,4	0,22	1°30’
28/38	1,5	0,25	1°30’
38/45	1,8	0,28	1°30’
42/55	2,0	0,32	1°30’
48/60	2,1	0,36	1°30’
55/70	2,2	0,38	1°30’
65/75	2,6	0,42	1°30’
75/90	3,0	0,48	1°30’
90/100	3,4	0,50	1°30’
100/110	3,8	0,52	1°30’
110/125	4,2	0,55	1°30’
125/145	4,6	0,60	1°30’
140/160	5,0	0,62	1°30’
160/185	5,7	0,64	1°30’
180/200	6,4	0,68	1°30’

n=1500 min^{-1}

The values shown in the table for radial and angular misalignment, must be corrected in case they are simultaneously acting on the coupling.

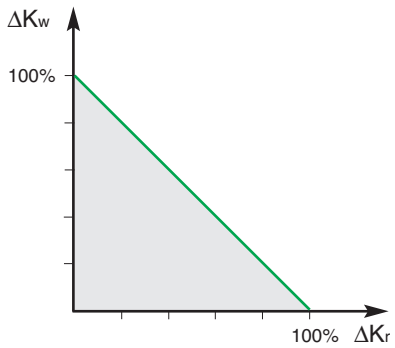

The sum of the admissible value (A) and the respective values shown in the table must be less than or equal to 1.

$$\frac{\Delta K_{rA}}{\Delta K_r} + \frac{\Delta K_{wA}}{\Delta K_w} \leq 1$$

ΔK_{aP}	Maximum axial misalignment	mm
ΔK_r	Maximum radial misalignment	mm
ΔK_w	Maximum angular misalignment	°

Dynamic torsional rigidity

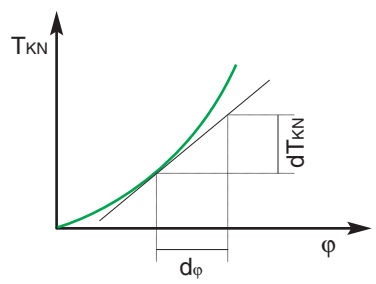

Dynamic torsional rigidity C_{Tdin} is the first derivate of the nominal torque of half coupling in respect to the torsion angle. φ is the torsion angle of half coupling in respect to the second half.

As a general rule, C_{Tdin} is greater than C_T and depends on the stress acting on the coupling.

Technical performances

The technical performances below refer to all types of TRASCO® executions and are valid for the indicated spiders when couplings are properly selected.

For particular applications needed, such as very high chemical resistance, spiders made of special material are available. Contact our Technical Department.

Type	Hardness spider		Torque			Max. speed		Dynamic torsional rigidity			
	Color	Shore	T_{KN} [Nm]	T_{Kmax} [Nm]	T_{KW} [Nm]	n (v=30m/s) [min-1]	n (v=40m/s) [min-1]	CTdin (1 T_{KN}) [Nm/rad]	CTdin (0,75 T_{KN}) [Nm/rad]	CTdin (0,5 T_{KN}) [Nm/rad]	CTdin (0,25 T_{KN}) [Nm/rad]
19/24	Yellow	92 Sh.A	10	20	2,7	14000	19000	1280	1050	800	470
	Red	98 Sh.A	17	34	4,4	14000	19000	2920	2390	1810	1070
	Green	64 Sh.D	21	42	5,5	14000	19000	5350	4390	3320	1970
24/32	Yellow	92 Sh.A	35	70	9	10600	14000	4860	3980	3010	1790
	Red	98 Sh.A	60	120	16	10600	14000	9930	8140	6160	3650
	Green	64 Sh.D	75	150	19,5	10600	14000	15110	12390	9370	5550
28/38	Yellow	92 Sh.A	95	190	25	8500	11800	10900	8940	6760	4010
	Red	98 Sh.A	160	320	42	8500	11800	26770	21950	16600	9840
	Green	64 Sh.D	200	400	52	8500	11800	27520	22570	17060	10120
38/45	Yellow	92 Sh.A	190	380	49	7100	9500	21050	17260	13050	7740
	Red	98 Sh.A	325	650	85	7100	9500	48570	39830	30110	17850
	Green	64 Sh.D	405	810	105	7100	9500	70150	57520	43490	25780
42/55	Yellow	92 Sh.A	265	530	69	6000	8000	23740	19470	14720	8730
	Red	98 Sh.A	450	900	117	6000	8000	54500	44690	33790	20030
	Green	64 Sh.D	560	1120	145	6000	8000	79860	65490	49520	29350
48/60	Yellow	92 Sh.A	310	620	81	5600	7100	36700	30090	22750	13490
	Red	98 Sh.A	525	1050	137	5600	7100	65290	53540	40480	24000
	Green	64 Sh.D	655	1310	170	5600	7100	95510	78320	59220	35100
55/70	Yellow	92 Sh.A	410	820	107	4750	6300	50720	41590	31450	18640
	Red	98 Sh.A	680	1250	178	4750	6300	94970	77880	58880	34900
	Green	64 Sh.D	825	1650	215	4750	6300	107920	88500	66910	39660
65/75	Yellow	92 Sh.A	625	1250	163	4250	5600	97130	79650	60220	35700
	Red	98 Sh.A	950	1900	245	4250	5600	129510	106200	80300	47600
	Green	64 Sh.D	1175	2350	305	4250	5600	151090	123900	93680	55530
75/90	Yellow	92 Sh.A	1280	2560	333	3550	4750	113320	92920	70260	41650
	Red	98 Sh.A	1950	3900	500	3550	4750	197500	161950	122450	72580
	Green	64 Sh.D	2410	4820	325	3550	4750	248220	203540	153900	91220
90/100	Yellow	92 Sh.A	2400	4800	624	2800	3750	190090	155870	117860	69860
	Red	98 Sh.A	3600	7200	936	2800	3750	312200	256000	193560	114730
	Green	64 Sh.D	4500	9000	1170	2800	3750	674520	553110	418200	247890
100/110	Yellow	92 Sh. A	3300	6600	860	2500	3350	253080	207530	156910	93010
	Red	98 Sh. A	4950	9900	1290	2500	3350	383260	314270	237620	140850
	Green	64 Sh. D	6200	12400	1600	2500	3350	861170	706160	533930	316480
110/125	Yellow	92 Sh. A	4800	9600	1250	2240	3000	311610	255520	193200	114520
	Red	98 Sh. A	7200	14400	1870	2240	3000	690060	565850	427840	253600
	Green	64 Sh. D	9000	18000	2340	2240	3000	1138590	933640	705920	418430
125/145	Yellow	92 Sh. A	6650	13300	1730	2000	2650	474860	389390	294410	174510
	Red	98 Sh. A	10000	20000	2600	2000	2650	1343640	1101790	833060	493790
	Green	64 Sh. D	12500	25000	3250	2000	2650	1435380	1177010	889930	527500
140/160	Red	95 Sh.A	12800	25600	3328	1800	2360	1424580	1168160	883240	523540
160/185	Red	95 Sh.A	19200	38400	4992	1500	2000	2482230	2035430	1538980	912220
180/200	Red	95 Sh.A	28000	56000	7280	1400	1800	3561450	2920400	2208100	1308840

Color	Torsion angle		Dampening factor Ψ (-)	Resonance factor V_R (-)
	j (T_{KN}) (°)	j (T_{Kmax}) (°)		
Yellow	3,2°	5°	0,8	7,9
Red	3,2°	5°	0,8	7,9
Green	2,5°	3,6°	0,75	8,5

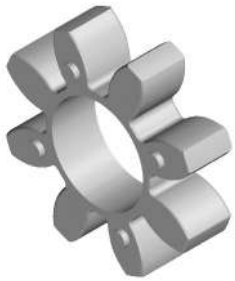

TRASCO® couplings for motors according to IEC standards (spider hardness 92 shore)

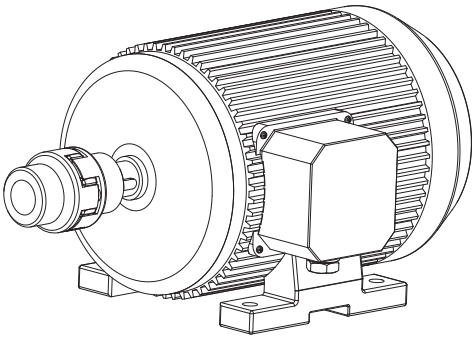

Size	3000 [1/min]				1500 [1/min]				1000 [1/min]				750 [1/min]				d x l [mm]	
	P_N [kW]	T_N [Nm]	Size	K	P_N [kW]	T_N [Nm]	Size	K	P_N [kW]	T_N [Nm]	Size	K	P_N [kW]	T_N [Nm]	Size	K	2 poles	4 - 6 - 8 poles
80	0,75	2,5	**19/24**	9,2	0,55	3,7	**19/24**	6,2	0,37	3,9	**19/24**	5,8	0,18	2,5	**19/24**	9,2	19x40	
	1,1	3,7		6,2	0,75	5,1		4,5	0,55	5,8		3,9	0,25	3,5		6,5		
90 S	1,5	5		4,6	1,1	7,5		3	0,75	8		2,8	0,37	5,3		4,3	24x50	
90 L	2,2	7,4		3,1	1,5	10		2,3	1,1	12	**24/32**	6,6	0,55	7,9		2,9		
100 L	3	9,8	**24/32**	8,1	2,2	15	**24/32**	5,3	1,5	15		5,3	0,75	11	**24/32**	7,2	28x60	
					3	20		4					1,1	16		5		
112 M	4	13		6,1	4	27		2,9	2,2	22		3,6	1,5	21		3,8		
132 S	5,5	18	**28/38**	12,7	5,5	36	**28/38**	6,3	3	30	**28/38**	7,6	2,2	30	**28/38**	7,6	38x80	
	7,5	25		9,2														
132 M					7,5	49		4,6	4	40		5,7	3	40		5,7		
									5,5	55		4,1						
160 M	11	36	**38/45**	12,5	11	72	**38/45**	6,2	7,5	74	**38/45**	6	4	54	**38/45**	8,3	42x110	
	15	49		9,1									5,5	74		6		
160 L	18,5	60		7,5	15	98		4,5	11	108		4,1	7,5	100		4,5		
180 M	22	71	**42/55**	8,7	18,5	121	**42/55**	5,1			**42/55**				**42/55**		48x110	
180 L					22	144		4,3	15	148		4,1	11	145		4,2		
200 L	30	97		6,3	30	196		3,1	18,5	181		3,4	15	198		3,1	55x110	
	37	120		5,1					22	215		2,8						
225 S					37	240	**48/60**	3			**48/60**		18,5	244	**48/60**	2,9	55x110	60x140
225 M	45	145		4,2	45	292		2,4	30	293		2,4	22	290		2,4		
250 M	55	177	**48/60**	4	55	356	**55/70**	2,4	37	361	**55/70**	2,3	30	392	**65**	2,6	60x140	65x140
280 S	75	241	**55/70**	3,5	75	484	**75/90**	5,1	45	438	**75**	5,7	37	483	**75**	5,1	65x140	75x140
280 M	90	289		2,9	90	581		4,3	55	535		4,6	45	587		4,2		
315 S	110	353		2,4	110	707	**75/90**	3,5	75	727	**75/90**	3,4	55	712	**75/90**	3,5		80x170
315 M	132	423	**75/90**	5,9	132	849		2,9	90	873		2,8	75	971		6,2		
315 L	160	513		4,8	160	1030	**90/100**	5,9	110	1070	**90**	5,7	90	1170	**90**	5,2		
	200	641		3,9	200	1290		4,7	132	1280		4,7	110	1420		4,2		
355 L	250	801		3,1	250	1610	**90/100**	3,7	160	1550	**90/100**	3,9	132	1710	**90/100**	3,5	75x140	95x170
			90/100						200	1930		3,1	160	2070	**100**	2,9		
	315	1010		6	315	2020		3	250	2420	**100**	2,5	200	2580		2,3		
400 L	355	1140		5,3	355	2280	**100**	2,6	315	3040	**100**	2	250	3220	**100**	1,8	80x170	110x210
	400	1280		4,7	400	2560		2,3										

P_N	Motor nominal torque	kW
T_N	Motor nominal torque	Nm
K	Safety factor	
d x l	Motor shaft's end	mm

“GR” base program

TRASCO® couplings are dimensionally manufactured to hub types “A” and “B”, the difference being the maximum shaft diameter which hubs can accept (corresponding respectively to the first and second code number). The long hub execution “L” (allows full coverage of the motor shaft) is available in both “A” and “B” executions.

Materials used for manufacture are:
- cast iron grade GG25 (all sizes);
- aluminum, die-casting
- cast iron grade GGG40 and steel upon request.

Approved according to ATEX directive.

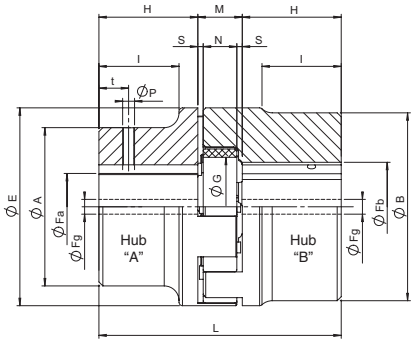

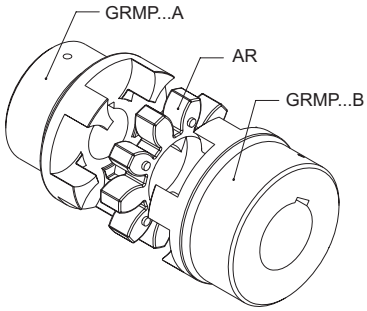

Dimensional specification hubs in GG25

Size	Fa max [mm]	Fb max [mm]	Fg [mm] executions				E [mm]	A [mm]	B [mm]	A execution [mm]			B execution [mm]			AL execution [mm]			BL execution [mm]			M [mm]	S [mm]	N [mm]	G [mm]
			A	B	AL	BL				H	L	I	H	L	I	H	L	I	H	L	I				
19/24	-	24	-	-	-	-	40	-	40	-	-	-	25	66	-	-	-	-	50	-	-	16	2	12	18
24/32	24	32	8	10	8	10	55	40	55	30	78	24	30	78	-	50	118	44	60	138	-	18	2	14	27
28/38	28	38	8	10	8	10	65	48	65	35	90	28	35	90	-	60	140	53	80	180	-	20	2,5	15	30
38/45	38	45	10	12	14	14	80	66	80	45	114	37	45	114	-	80	184	72	110	244	-	24	3	18	38
42/55	42	55	10	12	16	16	95	75	95	50	126	40	50	126	-	110	246	100	110	246	-	26	3	20	46
48/60	48	60	12	12	16	16	105	85	105	56	140	45	56	140	-	110	248	99	140	308	-	28	3,5	21	51
55/70	55	70	15	15	16	16	120	98	120	65	160	52	65	160	-	110	250	97	140	310	-	30	4	22	60
65/75	65	75	15	15	20	20	135	115	135	75	185	61	75	185	-	140	315	126	140	315	-	35	4,5	26	68
75/90	75	90	15	15	22	22	160	135	160	85	210	69	85	210	-	140	320	124	170	380	-	40	5	30	80
90/100	90	100	20	20	30	30	200	160	180	100	245	81	100	245	81	170	385	151	210	465	191	45	5,5	34	100
100/110	115	-	45	-	-	-	225	180	-	110	270	89	110	270	-	-	-	-	-	-	-	50	6	38	113
110/125	125	-	55	-	-	-	255	200	-	120	295	96	120	295	-	-	-	-	-	-	-	55	6,5	42	127
125/145	145	-	55	-	-	-	290	230	-	140	340	112	140	340	-	-	-	-	-	-	-	60	7	46	147
140/160	160	-	55	-	-	-	320	255	-	155	375	124	-	-	-	-	-	-	-	-	-	65	7,5	50	165
160/185	185	-	75	-	-	-	370	290	-	175	425	140	-	-	-	-	-	-	-	-	-	75	9	57	190
180/200	200	-	80	-	-	-	420	325	-	195	475	156	-	-	-	-	-	-	-	-	-	85	10,5	64	220

Material: 19/24 Sintered steel - from 24/32 to 90/100 Cast Iron - Ductile Iron over.
Keyway according to DIN 6885 sheet 1 - JS9

Dimensional specification hubs in aluminum

Size	Fa max [mm]	Fb max [mm]	Fg [mm] execution		E [mm]	A [mm]	B [mm]	L [mm]	H [mm]	M [mm]	S [mm]	N [mm]	I [mm]	G [mm]	t [mm]	P [mm]
			A	B												
19/24	-	24	-	-	40	40	40	66	25	16	2	12	-	18	10	M5
24/32	24	32	-	-	55	40	55	78	30	18	2	14	24	27	10	M5
28/38	28	38	12	28	65	48	65	90	35	20	2,5	15	28	30	15	M6
38/45	38	45	22	38	80	66	77	114	45	24	3	18	37	38	15	M8
42/55	-	55	-	22	95	-	95	126	50	26	3	20	-	46	20	M8
48/60	-	60	-	30	105	-	105	140	56	28	3,5	21	-	51	20	M8

Order form

Hub — **GRMP 48/60 AL F48**

- GRMP: Standard TRASCO® hub
  GRMALU: TRASCO® aluminium hub
- Size
- A: execution A
  B: execution B
  AL: long execution A
  BL: long execution B
- F...: diameter of the bore

Spider — **AR 48/60 R**

- TRASCO® spider
- Size
- 92 Sh A (yellow) if not indicated
  R: 98 Sh A (red)
  V: 64 Sh D (green)

Stock range
Hubs with finished bore H7, keyway (DIN 6885 sheet 1 - JS9), setscrew

Type		19/24		24/32				28/38				38/45				42/55			48/60			55/70		65/75	75/90	90/100
Material*		ALU	AC	ALU		GG		ALU		GG		ALU		GG		ALU	GG		ALU	GG		GG		GG	GG	GG
Hub execution		B	B	A	B	A	B	A	B	A	B	A	B	A	B	B	A	B	B	A	B	A	B	A	A	A
Stock range bore [mm]	10	●	●																							
	11	●	●																							
	12	●	●																							
	14	●	●	●		●		●		●																
	15	●	●	●		●		●		●																
	16	●	●	●		●		●		●																
	18		●	●		●		●		●																
	19	●	●	●		●		●		●																
	20	●	●	●		●		●		●																
	22			●		●		●		●				●												
	24	●	●	●	●	●	●	●		●		●		●			●									
	25				●		●	●		●		●		●		●	●									
	28				●		●	●		●		●		●		●	●									
	30						●		●		●	●		●		●	●			●		●				
	32						●				●	●		●		●	●		●	●		●				
	35								●		●	●		●		●	●		●	●		●				
	38								●		●	●		●		●	●		●	●		●				
	40												●		●	●	●		●	●		●		●		
	42												●		●	●	●		●	●		●				
	45															●		●	●	●		●		●	●	
	48															●		●	●	●		●		●	●	
	50															●		●	●		●	●		●	●	●
	55															●		●	●		●	●		●	●	●
	60																		●		●		●	●	●	●
	65																						●	●	●	●
	70																						●		●	●
	75																								●	●
	80																									●
	85																									●
	90																									●

*ALU = Aluminum - AC = Steel - GG = Cast iron

Setscrews types for single hubs

Hub dimension	P	t [mm]	Screw tightening torque [Nm]
19/24	M5	10	2
24/32	M5	10	2
28/38	M6	15	4,8
38/45	M8	15	10
42/55	M8	20	10
48/60	M8	20	10
55/70	M10	20	17
65/75	M10	20	17
75/90	M10	25	17
90/100	M12	30	40
100/110	M12	30	40
110/125	M16	35	80
125/145	M16	40	80
140/160	M20	45	140
160/185	M20	50	140
180/200	M20	50	140

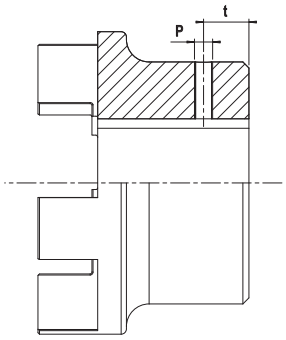

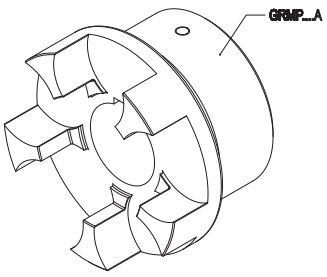

“GRB” taper bushing series

TRASCO® couplings type GRB for taper bushing SER-SIT®, are manufactured in cast iron GG25.
They combine the typical high performances of standard TRASCO® couplings with the advantages of easy mounting and dismounting offered by the taper bushing SER-SIT®.
These hubs are manufactured in two different mounting executions:

- B1: installing of taper bushing from outside
- B2: installing of taper bushing from inside (not available for size 90/100)

The GRB execution eliminate the problem of fitting corrosion, making it suitable for all type of machinery.
Hubs type B1 may be axially moved for spider replacement.
Approved according to ATEX Directive.

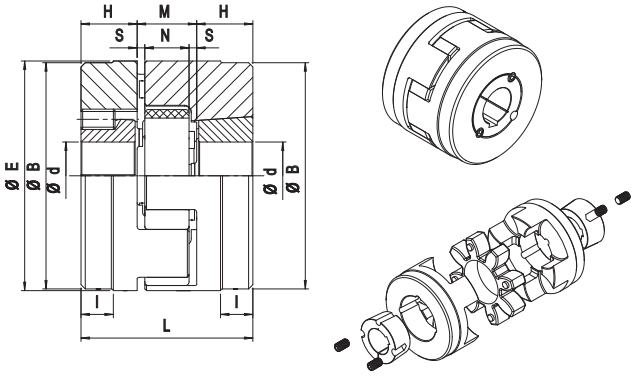

B1

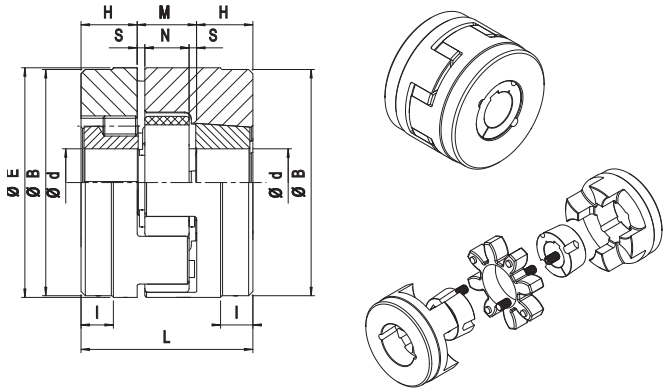

B2

Size	Taper bushing	E [mm]	B [mm]	L [mm]	H [mm]	M [mm]	S [mm]	N [mm]	I [mm]
28/38	1108 (2820)	65	65	66	23	20	2,5	15	-
38/45	1108 (2820)	80	78	70	23	24	3	18	15
42/55	1610 (4025)	95	94	78	26	26	3	20	16
48/60	1615 (4040)	105	104	106	39	28	3,5	21	28
55/70	2012 (5030)	120	118	96	33	30	4	22	20
65/75	2012 (5030)	135	133	101	33	35	4,5	26	19
75/90	2517 (6545)	160	158	130	45	40	5	30	36
90/100 *	3535 (9090)	200	180	223	89	45	5,5	34	70

* Only “B1” execution

Taper lock type	Diameter of the bore (H7) Keyway according to DIN 6885 sheet 1 - JS9		Transmissible torque [Nm]	Transmittable friction torque	
				Ø bore [mm]	[Nm]
1108 (2820)	[mm]	9 10 11 12 14 15 16 18 19 20 22 24 25 26 27 28	150	12 19 24 28	28 49 64 79
	[inches]	3/8 - 1/2 - 5/8 - 3/4 - 7/8 - 1 - 1 1/8			
1610 (4025)	[mm]	12 14 15 16 18 19 20 22 24 25 26 28 30 32 35 38 40 42	490	19 24 38 42	98 135 240 265
	[inches]	3/8 - 1/2 - 5/8 - 3/4 - 7/8 -1 -1 1/8 -1 1/4 -1 3/8 -1 1/2 -1 5/8			
1615 (4040)	[mm]	12 14 15 16 18 19 20 22 24 25 28 30 32 35 38 40 42	490	19 24 38 42	98 135 240 265
	[inches]	1/2 - 5/8 - 3/4 - 7/8 - 1 - 1 1/8 - 1 1/4 - 1 3/8 - 1 1/2 - 1 5/8 - 1 3/4			
2012 (5030)	[mm]	14 15 16 18 19 20 22 24 25 26 28 30 32 35 38 40 42 45 48 50	800	24 38 42 48 50	165 310 340 400 420
	[inches]	5/8 -3/4 - 7/8 -1 -1 1/8 -1 1/4 -1 3/8 -1 1/2 -1 5/8 -1 3/4 -1 7/8 - 2			
2517 (6545)	[mm]	6 18 19 20 22 24 25 28 30 32 35 38 40 42 45 48 50 55 60 65	1300	24 38 42 48 55 60	220 380 430 510 600 670
	[inches]	3/4 - 7/8 - 1 - 1 1/8 - 1 1/4 - 1 3/8 - 1 1/2 - 1 5/8 - 1 3/4 - 1 7/8 - 2 - 2 1/8 2 1/4 - 2 3/8 - 2 1/2			
3535 (9090)	[mm]	25 28 30 32 35 38 40 42 45 48 50 55 60 65 70 75 80 85 90	5000	42 60 75 90	1000 1580 2150 2600
	[inches]	1 1/2 - 1 5/8 - 1 3/4 - 1 7/8 - 2 - 2 1/8 - 2 1/4 - 2 3/8 - 2 1/2 - 2 5/8 - 2 3/4 - 2 7/8 - 3 - 3 1/8 - 3 1/4 - 3 3/8 - 3 1/2			

Order form

Hub **GRMB 48/60 B2**

GRMB: TRASCO® GRMB for taper lock

Size

B1: execution B1
B2: execution B2

Spider **AR 48/60 R**

TRASCO® spider

Size

92 Sh A (yellow) if not indicated
R: 98 Sh A (red)
V: 64 Sh D (green)

“GRCAL” series for use with SIT-LOCK® elements type 8

This execution has been introduced to incorporate advantages offered by the SIT-LOCK® locking elements in the shaft-hub connection.
The system allows for a quick, safe and backlash free mounting without the use of keyway and eliminating the need for lock washers, spacers and stop rings.
Many different solutions may be created to solve all kinds of application needs.
We include hereunder a very useful example. In fact, the same hub bore allows the fitting of different shaft diameters.

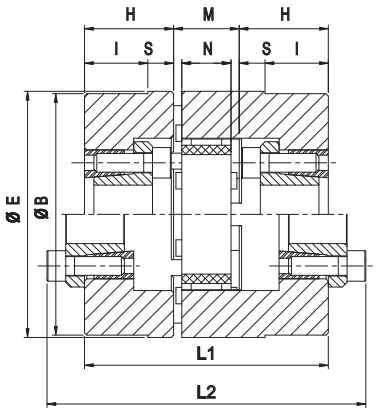

FIG 1

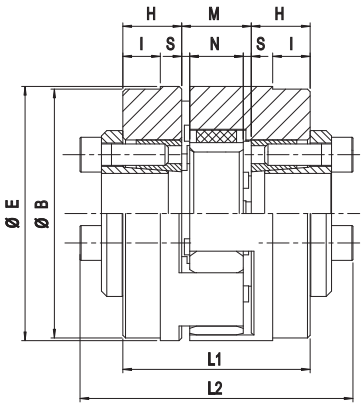

FIG 2

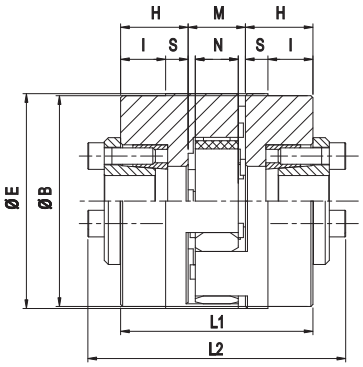

FIG 3

Size	d [mm]	D [mm]	H [mm]	E [mm]	B [mm]	L1 [mm]	L2 [mm]	M [mm]	S [mm]	N [mm]	I [mm]	Material*	Fig.
38/45	14 -16 -18 -19 - 20 - 22 - 24 - 25 - 28 - 30	55	30	80	78	84	116	24	3	18	22	AC	3
42/55	14 - 16 - 18 - 19 - 20 - 22 - 24 - 25 - 28 - 30	55	22	95	93	70	102	26	3	20	14	GS-400	2
	24 - 25 - 28 - 30 - 32 - 35 - 38 - 40	65	32			90	122				22	AC	3
48/60	14 - 16 - 18 - 19 - 20 - 22 - 24 - 25 - 28 - 30	55	38	105	103	104	136	28	3,5	21	27	GS-400	1
	24 - 25 - 28 - 30 - 32 - 35 - 38 - 40	65	33			94	126				22	AC	3
55/70	14 -16 -18 -19 - 20 - 22 - 24 - 25 - 28 - 30	55	38	120	118	106	138	30	4	22	25	GG25	1
	24 - 25 - 28 - 30 - 32 - 35 - 38 - 40	65	38			106	138				25	GS-400	1
	30 - 32 - 35 - 38 - 40 - 42 - 45 - 48 - 50	80	38			106	138				25	AC	3
65/75	14 - 16 - 18 - 19 - 20 - 22 - 24 - 25 - 28 - 30	55	38	135	133	111	143	35	4,5	26	24	GG25	1
	24 - 25 - 28 - 30 - 32 - 35 - 38 - 40	65	38			111	143				24	GS-400	1
	30 - 32 - 35 - 38 - 40 - 42 - 45 - 48 - 50	80	25			85	117				11	GS-400	2
75/90	14 - 16 - 18 - 19 - 20 - 22 - 24 - 25 - 28 - 30	55	38	160	158	116	148	40	5	30	22	GG25	1
	24 - 25 - 28 - 30 - 32 - 35 - 38 - 40	65	38			116	148				22	GG25	1
	30 - 32 - 35 - 38 - 40 - 42 - 45 - 48 - 50	80	41			122	154				25	GS-400	1
90/100	14 - 16 - 18 - 19 - 20 - 22 - 24 - 25 - 28 - 30	55	38	200	180	121	153	45	5,5	34	19	GG25	1
	24 - 25 - 28 - 30 - 32 - 35 - 38 - 40	65	38			121	153				19	GG25	1
	30 - 32 - 35 - 38 - 40 - 42 - 45 - 48 - 50	80	41			127	159				22	GG25	1

*: **AC** = steel / **GG 25** = cast iron 25 / **GS-400** = Spheroidal cast-iron 400

Order form

Hub — **GRMC 48/60**

- GRMC: TRASCO® hub for SIT-LOCK® type 8
- Size

Spider — **AR 48/60 R**

- Anello elastico per TRASCO®
- Size
- Yellow if not indicated; R: red; V: green

SIT-LOCK® elements — **CAL 8 F20 / 55**

- CAL: SIT-LOCK® element
- Size
- Bore diameter
- External bore diameter

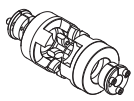
Fig. 1 External CAL

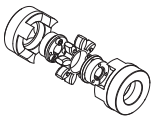
Fig. 1 Internal CAL

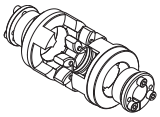
Fig. 2

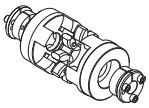
Fig. 3

“GRL” series with intermediate shaft

The GRL series allows the joining of two shafts (even very distant) through two TRASCO® couplings and an intermediate shaft (length “Lw”) of customized dimension.
The presence of two polyurethane rings allows high dampening capability and greater radial misalignments.
As a standard, hubs are made of cast iron, while shafts are from steel; though, different materials can be used, according to different applications.

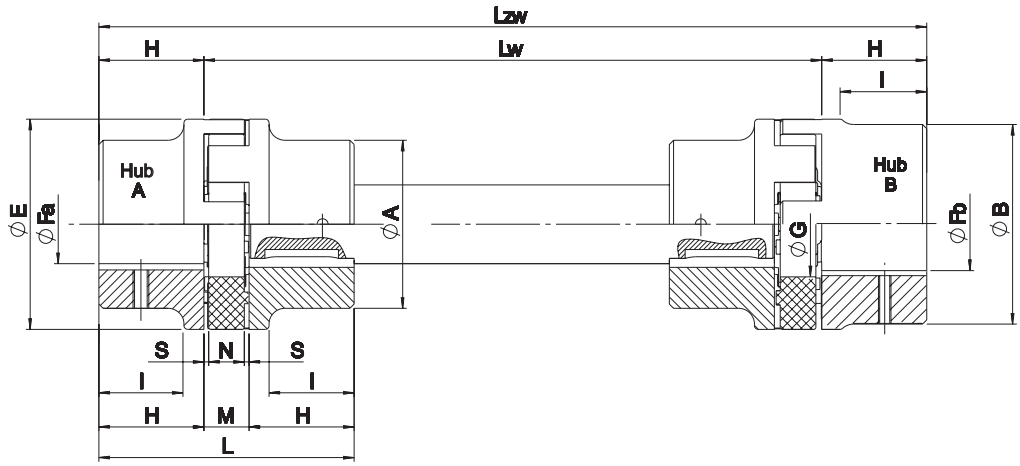

Size	Fa [mm]	Fb [mm]	E [mm]	A [mm]	B [mm]	H [mm] execution			L [mm]		M [mm]	S [mm]	N [mm]	I [mm] execution				G [mm]
						A-B	AL	BL	A-B	AL-BL				A	B	AL	BL	
24/32	9 - 24	11 - 32	55	40	55	30	50	60	78	128	18	2	14	24	-	44	-	27
28/38	9 - 28	11 - 38	65	48	65	35	60	80	90	160	20	2,5	15	28	-	53	-	30
38/45	11 - 38	13 - 45	80	66	80	45	80	110	114	214	24	3	18	37	-	72	-	38
42/55	11 - 42	13 - 55	95	75	95	50	110	110	126	246	26	3	20	40	-	100	-	46
48/60	13 - 48	13 - 60	105	85	105	56	110	140	140	278	28	3,5	21	45	-	99	-	51
55/70	16 - 55	16 - 70	120	98	120	65	110	140	160	280	30	4	22	52	-	97	-	60
65/75	16 - 65	16 -75	135	115	135	75	140	140	185	315	35	4,5	26	61	-	126	-	68
75/90	16 - 75	16 - 90	160	135	160	85	140	170	210	350	40	5	30	69	-	124	-	80
90/100	21 - 90	21 - 100	200	160	180	100	170	210	245	425	45	5,5	34	81	81	151	191	100
100/110	46 - 115	-	225	180	-	110	-	-	270	-	50	6	38	89	-	-	-	113
110/125	56 - 125	-	255	200	-	120	-	-	295	-	55	6,5	42	96	-	-	-	127
125/145	56 - 145	-	290	230	-	140	-	-	340	-	60	7	46	112	-	-	-	147

Keyway according to DIN 6885 sheet 1 - JS9

Coupling configurator

Coupling code	Item	Type	Execution	Bore diameter	Order example
GRL38/45	*Hub 1*	GR	A-B-AL-BL	F…	GRMP38/45AF35
		GRB	B1-B2	F…	
		GRCAL	-	F…	
	Spider 1	AR	G-R-V	-	AR38/45V
	Distance between two side shafts Lw				Lw = 1200 mm
	Spider 2	AR	G-R-V	-	AR38/45V
	Hub 2	GR	A-B-AL-BL	F…	GRMP38/45BF40
		GRB	B1-B2	F…	
		GRCAL	-	F…	

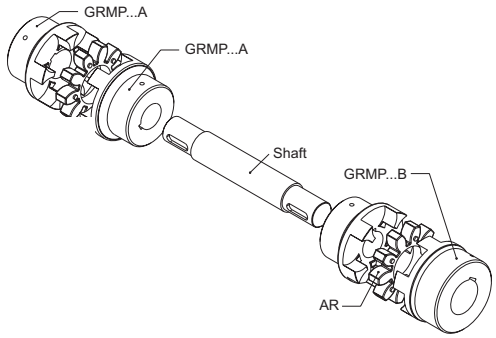

“GRL CAL3” series with intermediate shaft

The GRL CAL3 series allows the joining of two shafts (even two spaced) through two TRASCO® couplings and an intermediate shaft (length “L_{R2}”) of customized dimension, mounted with shrink discs on the hubs.
The presence of two polyurethane elements allows high dampening capability and greater radial misalignments.
As a standard, hubs are made of cast iron, while shafts are made of steel; though different materials can be used according to different applications.

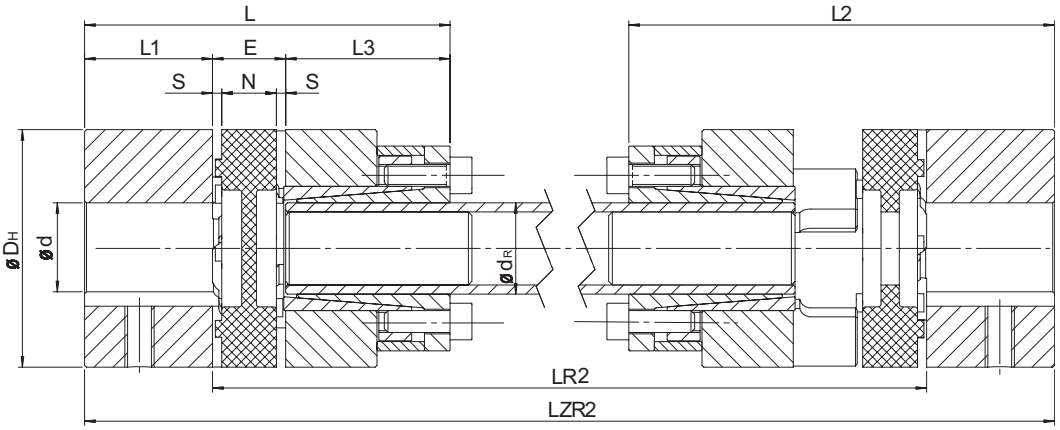

Size	External hub		Dimensions [mm] GRL-CAL3												Internal hub		
													Intermediate shaft		SITLOCK 3 elements		
	dmin	dmax	D_H	L_1	L_3	L	E	N	s	L_2	L_{R2} min.	L_{ZR2}	d_R	C [Nm/Rad·m]	Type	Screw Din 912-12.9 M·L	T_A [Nm]
14	4	15	30	11	26	50	13	10	1,5	61,5	109	LR2+22	10x2.0	68,36	10x16	M4X10	4,9
19/24	6	24	40	25	26	67	16	12	2	81	120	LR2+50	12x2.0	130	12x18	M4X10	4,9
24/32	8	28	55	30	38	86	18	14	2	102	156	LR2+60	20x3.0	954,9	20x28	M6X18	17
28/38	10	38	65	35	45	100	20	15	2,5	117,5	177	LR2+70	25x2.5	1811	25x34	M6X18	17
38/45	12	45	80	45	45	114	24	18	3	135	192	LR2+90	32x3.5	5167	32x43	M6X18	17
42/55	14	55	95	50	52	128	26	20	3	151	214	LR2+100	40x4.0	11870	40x53	M6X18	17
48/60	15	60	105	56	70	154	28	21	3,5	178,5	261	LR2+112	45x4.0	17486	45x59	M8X22	41
55/70	20	74	120	65	80	175	30	22	4	201	288	LR2+130	55x4.0	33543	55x71	M8X22	41
65/75	22	80	135	75	80	190	35	26	4,5	220,5	307	LR2+150	60x4.0	44362	60x77	M8X22	41

Keyway according to DIN 6885 sheet 1 - JS9

Coupling configurator

Coupling code	Item	Type	Execution	Bore diameter	Order example
GRLC38/45	*Hub 1*	GR	A-B-AL-BL	F…	GRMP38/45AF35
		GRB	B1-B2	F…	
		GRCAL	-	F…	
	Spider 1	AR	G-R-V	-	AR38/45V
	Distance between two side shafts LR2				LR2 = 1200 mm
	Spider 2	AR	G-R-V	-	AR38/45V
	Hub 2	GR	A-B-AL-BL	F…	GRMP38/45BF40
		GRB	B1-B2	F…	
		GRCAL	-	F…	

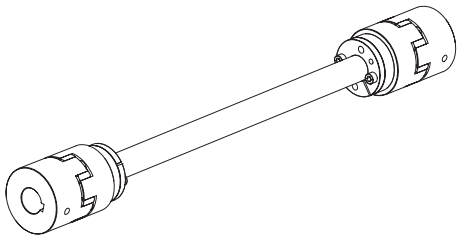

“GRF” flange series

The GRF series with flanges has been developed for applications on heavy machinery and to combine different shafts and flange solutions.
There are different assembling options:

Flange-flange: using two hubs type “CF”

Flange-shaft: using one hub Trasco standard “GR” and one hub type ”CF”

Shaft-shaft: using two hubs type “CFF”, allows the replacement of the elastic element without dismounting of either motor-machine or driven-machine.

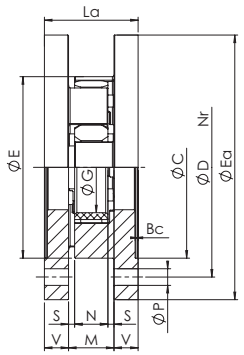

flange - flange

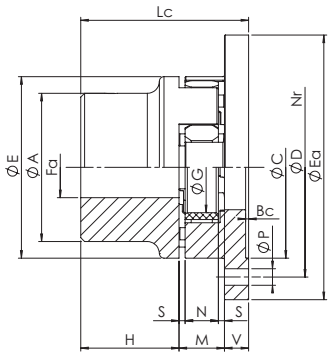

flange - shaft

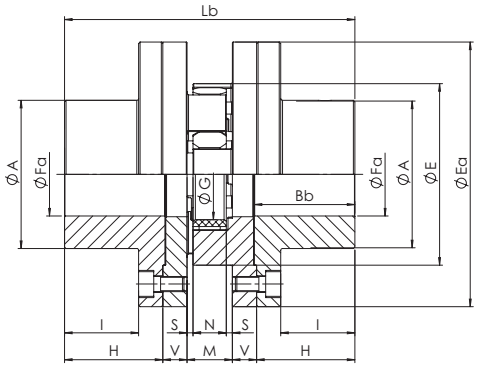

shaft - shaft

Size	Fa min [mm]	Fa max [mm]	E [mm]	Ea [mm]	A [mm]	C [mm]	D [mm]	N° viti	P [mm]	G [mm]	H [mm]	Bb [mm]	Bc [mm]	I [mm]	V [mm]	M [mm]	S [mm]	N [mm]	La [mm]	Lb [mm]	Lc [mm]
19/24	6	19	40	65	40/32	40	50	5	4,5	18	25	26	1,5	17	8	16	2	12	32	82	49
24/32	8	24	55	80	55/40	55	65	5	4,5	27	30	31	1,5	22	8	18	2	14	34	94	56
28/38	10	28	65	100	65/48	65	80	6	6,5	30	35	36	1,5	25	10	20	2,5	15	40	110	65
38/45	12	38	80	115	66	80	95	6	6,5	38	45	46	1,5	35	10	24	3	18	44	134	79
42/55	14	42	95	140	75	95	115	6	9	46	50	51	2	38	12	26	3	20	50	150	88
48/60	15	48	105	150	85	105	125	8	9	51	56	57	2	44	12	28	3,5	21	52	164	96
55/70	20	55	120	175	98	120	145	8	11	60	65	66	2	49	16	30	4	22	62	192	111
65/75	22	65	135	190	115	135	160	10	11	68	75	76	2	59	16	35	4,5	26	67	217	126
75/90	30	75	160	215	135	160	185	10	14	80	85	87	2,5	66	19	40	5	30	78	248	144
90/100	40	90	200	260	160	200	225	12	14	100	100	102	3	80	20	45	5,5	34	85	285	165
100/110	45	115	225	285	180	225	250	12	14	113	110	112	4	85	25	50	6	38	100	320	185
110/125	55	125	255	330	200	255	290	12	18	127	120	122	4	94	26	55	6,5	42	107	347	201
125/145	55	145	290	370	230	290	325	16	18	147	140	142	5	110	30	60	7	46	120	400	230

Keyway according to DIN 6885 sheet 1 - JS9. Material GJS400.

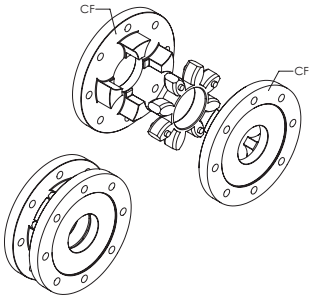

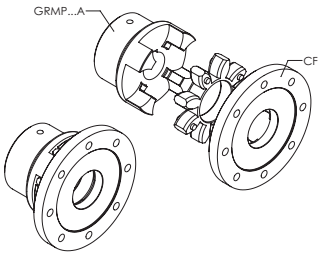

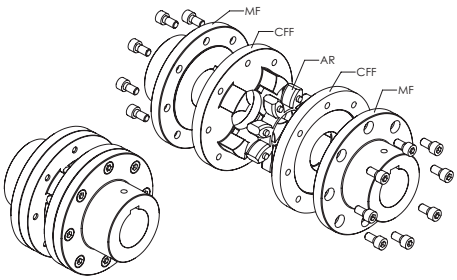

Order form

Hub	GRF	CF	48

GRF: flange series

CF: Flange “CF” execution
CFF: Flange “CFF” execution

Size

“GRF C” flange series

The GRF C series has the same characteristics as the BF series, while being compact in dimension.

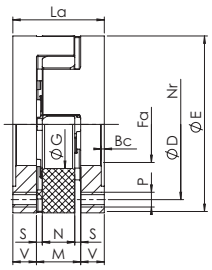

flange - flange

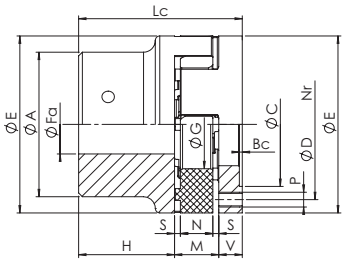

flange - shaft

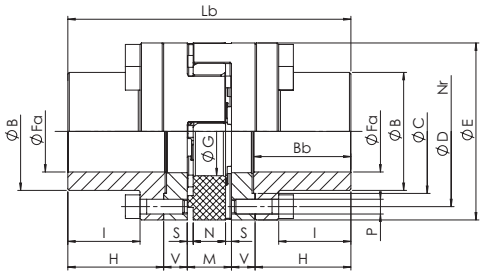

shaft - shaft

Size	Fa min [mm]	Fa max [mm]	E [mm]	A [mm]	B [mm]	H [mm]	I [mm]	La [mm]	Lb [mm]	Lc [mm]	V [mm]	M [mm]	S [mm]	N [mm]	Bb [mm]	Bc [mm]	G [mm]	D [mm]	Nr	C [mm]	P [mm]
24/32	8	24	55	40	36	30	22	34	94	56	8	18	2	14	31	1,5	27	45	8	36	M5
28/38	10	28	65	48	42	35	25	40	110	65	10	20	2,5	15	36	1,5	30	54	8	44	M6
38/45	12	38	80	66	52	45	35	44	134	79	10	24	3	18	46	1,5	38	66	8	54	M8
42/55	14	42	95	75	62	50	38	50	150	88	12	26	3	20	51	2	46	80	12	65	M8
48/60	15	48	105	85	70	56	44	52	164	96	12	28	3,5	21	57	2	51	90	12	75	M8
55/70	20	55	120	98	80	65	49	62	192	111	16	30	4	22	66	2	60	102	8	84	M10
65/75	22	65	135	115	94	75	59	67	217	126	16	35	4,5	26	76	2	68	116	12	96	M10
75/90	30	75	160	135	108	85	66	78	248	144	19	40	5	30	87	2,5	80	136	15	112	M12
90/100	40	90	200	160	142	100	80	85	285	165	20	45	5,5	34	102	3	100	172	15	145	M16
100/110	45	115	225	180	158	110	85	100	320	185	25	50	6	38	112	4	113	195	15	165	M16
110/125	55	125	255	200	178	120	94	107	347	201	26	55	6,5	42	122	4	127	218	15	180	M20
125/145	55	145	290	230	206	140	110	120	400	230	30	60	7	46	142	5	147	252	15	215	M20

Keyway according to DIN 6885 sheet 1 - JS9.

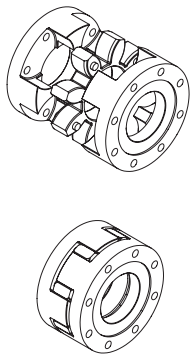

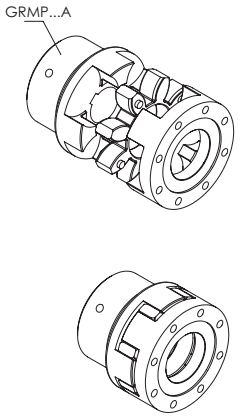

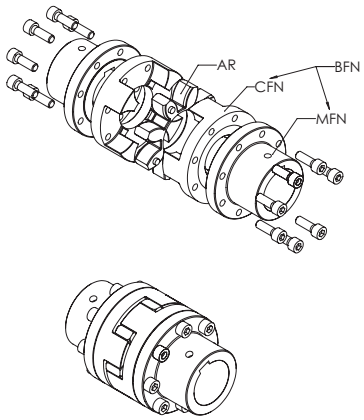

Order form

Hub	GRFBFN	48

GRFBFN: shaft side flange “BFN” execution
GRFCFN: ring side flange “BFN” - “CFN” execution

Size

Nr	Number of screws

“GRS” double cardanic series

The GRS series allows compensation of high axial, radial and angular misalignment. Additionally, the use of the double spider allows for twice the torsion angle and provides very high dampening effect.

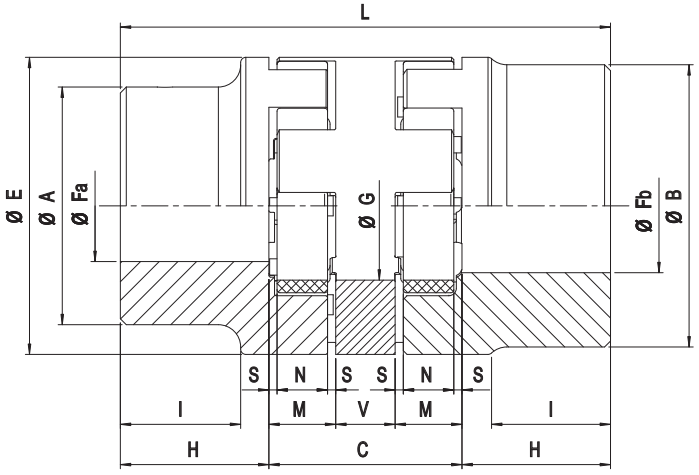

Size	Fa [mm]	Fb [mm]	H [mm]	V [mm]	C [mm]	M [mm]	S [mm]	N [mm]	L [mm]	E [mm]	A [mm]	B [mm]	G [mm]	ΔKr [mm]	ΔKw [°]
24/32	9 - 24	11 - 32	30	16	52	18	2	14	112	55	40	55	27	0,89	
28/38	9 - 28	11 - 38	35	18	58	20	2,5	15	128	65	48	65	30	1	
38/45	11 - 38	13 - 45	45	20	68	24	3	18	158	80	66	80	38	1,15	
42/55	11 - 42	13 - 55	50	22	74	26	3	20	174	95	75	95	46	1,26	
48/60	13 - 48	13 - 60	56	24	80	28	3,5	21	192	105	85	105	51	1,36	1°30’
55/70	16 - 55	16 - 70	65	28	88	30	4	22	218	120	98	120	60	1,52	
65/75	16 - 65	16 - 75	75	32	102	35	4,5	26	252	135	115	135	68	1,75	
75/90	16 - 75	16 - 90	85	36	116	40	5	30	286	160	135	160	80	2	
90/100	21 - 90	21 - 100	100	40	130	45	5,5	34	330	200	160	180	100	2,5	

Keyway according to DIN 6885 sheet 1 - JS9

Order form

For hub “GR” order form please see TRASCO® GR base program

Spacer element **GRS 48**

GRS: spacer element

Size

F_a	Bore of hub “A”	mm
F_b	Bore of hub “B”	mm
ΔK_r	Maximum radial misalignment	mm
ΔK_w	Maximum angular misalignment	°

GRS

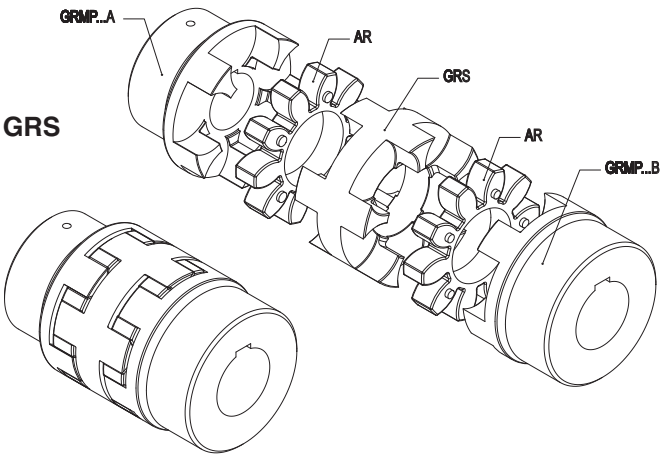

“GR FRT” drum brake series

The GR FRT series has been developed to suit drum brake (FRT) transmission according to DIN 15431/15435.
It is considered an elastic coupling consisting of:
- Standard hub (any of Trasco family)
- Elastic spider
- Special hub attached to brake drum

Components are either made of cast-iron (G25), spheroidal cast-iron (GS400), or steel according to application.
Also, assembling of different dimensioned brake drum to any kind of coupling is allowed. See below tables.

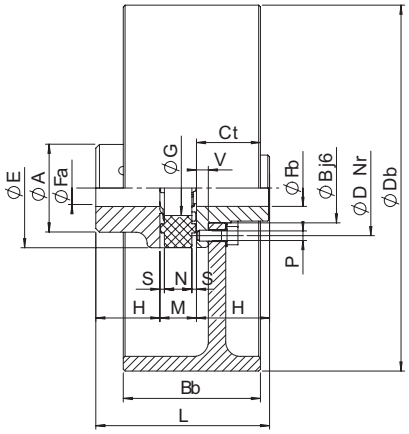

Keyway according to DIN 6885 sheet 1 - JS9

GR FRT - drum brake												W_{FRT}	J_{FRT}	min^{-1} with Vmax 30 m/s
Db x Bb	28	38	42	48	55	65	75	90	100	110	125	[kg]	[kg m²]	
160x60	30	31	-	-	-	-	-	-	-	-	-	2,12	0,01	3580
200x75	35	36	38	39	41	-	-	-	-	-	-	3,45	0,03	2860
250x95	43	44	46	47	49	50	52	-	-	-	-	6,87	0,08	2290
315x118	-	-	55	56	58	59	61	64	-	-	-	14,95	0,28	1820
400x150	-	-	68	69	71	72	74	77	79	82	-	31,20	0,89	1430
500x190	-	-	-	-	-	87	89	92	94	97	101	60,00	2,70	1150
630x236	-	-	-	-	-	-	107	110	112	115	119	112,00	8,01	910
710x265	-	-	-	-	-	-	-	-	123	126	130	161,00	14,90	810
800x300	-	-	-	-	-	-	-	-	-	-	144	202,00	27,20	720

Size	Fa;Fb min [mm]	Fa;Fb max [mm]				E	A	B	H	L	G	Nr	V	M	S	N	D	P
		Fa	Fb (GG25)	Fb (GS400)	Fb (Steel)	[mm]	[mm]	[mm]	[mm]	[mm]	[mm]		[mm]	[mm]	[mm]	[mm]	[mm]	[mm]
28 FR	10	28	20	22	24	65	48	38	35	90	30	8	6,5	20	2,5	15	52	M6
38 FR	12	38	28	32	34	80	66	50	45	114	38	8	7,5	24	3	18	66	M8
42 FR	14	42	30	38	42	95	75	60	50	126	46	12	9,5	26	3	20	80	M8
48 FR	15	48	35	45	48	105	85	68	56	140	51	12	10,5	28	3,5	21	90	M8
55 FR	20	55	42	50	55	120	98	78	65	160	60	8	12,5	30	4	22	102	M10
65 FR	22	65	48	55	65	135	115	92	75	185	68	12	13,5	35	4,5	26	116	M10
75 FR	30	75	58	70	75	160	135	106	85	210	80	15	15,5	40	5	30	136	M12
90 FR	40	90	75	90	100	200	160	140	100	245	100	15	18,5	45	5,5	34	172	M16
100 FR	45	115	-	100	-	225	180	156	110	270	113	15	20,5	50	6	38	195	M16
110 FR	55	125	-	110	-	255	200	176	120	295	127	15	23,5	55	6,5	42	218	M20
125 FR	55	145	-	130	-	290	230	204	140	340	147	15	27,5	60	7	46	252	M20

Order form

Hub **GRFRT 48**

GRFRT: brake side hub

Size

W_{FRT}	“GRFRT” weight	kg
J_{FRT}	“GRFRT” moment of inertia	kgm²
Nr	Number of screws	

GRFRT

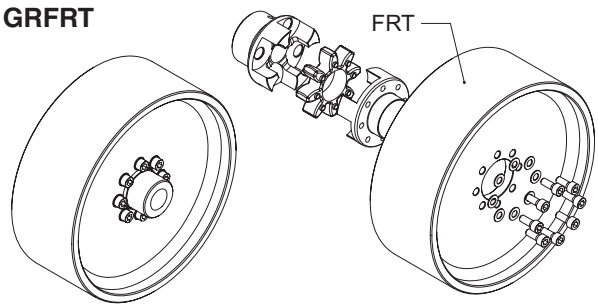

“GR FRD” brake disc series

The GR FRD series has been developed to suit disc-brake (FRD) transmissions.
It is considered an elastic coupling consisting of:
- Standard hub (any of Trasco family)
- Elastic spider
- Special hub attached to the brake disc

Components are either made of cast-iron (GG25), spheroidal cast-iron (GS400), or steel according to application.
Also, assembling of different dimensioned brake discs to any kind of coupling is allowed. See below tables.

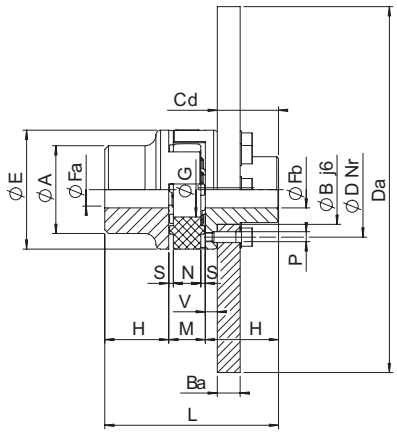

Keyway according to DIN 6885 sheet 1 - JS9

GR FRD - brake disc												W_{FRD}	J_{FRD}	min^{-1} with Vmax 40 m/s
Da x Ba	28	38	42	48	55	65	75	90	100	110	125	[kg]	[kg m²]	
200x12,5	X	X	-	-	-	-	-	-	-	-	-	2,93	0,0154	3820
250x12,5	X	X	X	X	-	-	-	-	-	-	-	4,66	0,0376	3060
315x16	-	-	X	X	X	X	X	-	-	-	-	8,62	0,1118	2430
400x16	-	-	-	X	X	X	X	X	X	X	-	15,23	0,3152	1910
500x16	-	-	-	-	X	X	X	X	X	X	X	23,96	0,7680	1530
630x20	-	-	-	-	-	X	X	X	X	X	X	47,72	2,4264	1210
710x20	-	-	-	-	-	X	X	X	X	X	X	60,93	3,9151	1080
800x25	-	-	-	-	-	-	-	X	X	X	X	94,91	7,8790	950
900x25	-	-	-	-	-	-	-	-	-	X	X	118,95	12,6091	850

Size	Fa;Fb min [mm]	Fa;Fb max [mm]				E [mm]	A [mm]	B [mm]	H [mm]	L [mm]	G [mm]	Nr	V [mm]	M [mm]	S [mm]	N [mm]	D [mm]	Cd [mm]	P [mm]
		Fa	Fb (GG25)	Fb (GS400)	Fb (Steel)														
28 FR	10	28	20	22	24	65	48	38	35	90	30	8	6,5	20	2,5	15	52	28,5	M6
38 FR	12	38	28	32	34	80	66	50	45	114	38	8	7,5	24	3	18	66	37,5	M8
42 FR	14	42	30	38	42	95	75	60	50	126	46	12	9,5	26	3	20	80	40,5	M8
48 FR	15	48	35	45	48	105	85	68	56	140	51	12	10,5	28	3,5	21	90	45,5	M8
55 FR	20	55	42	50	55	120	98	78	65	160	60	8	12,5	30	4	22	102	52,5	M10
65 FR	22	65	48	55	65	135	115	92	75	185	68	12	13,5	35	4,5	26	116	61,5	M10
75 FR	30	75	58	70	75	160	135	106	85	210	80	15	15,5	40	5	30	136	69,5	M12
90 FR	40	90	75	90	100	200	160	140	100	245	100	15	18,5	45	5,5	34	172	81,5	M16
100 FR	45	115	-	100	-	225	180	156	110	270	113	15	20,5	50	6	38	195	89,5	M16
110 FR	55	125	-	110	-	255	200	176	120	295	127	15	23,5	55	6,5	42	218	96,5	M20
125 FR	55	145	-	130	-	290	230	204	140	340	147	15	27,5	60	7	46	252	112,5	M20

Order form

Hub	**GRFRD**	**48**

GRFRD: brake side hub

Size

W_{FRD}	“GRFRD” disc weight	kg
J_{FRD}	“GRFRD” moment of inertia	kgm²
Nr	Number of screws	

GRFRD

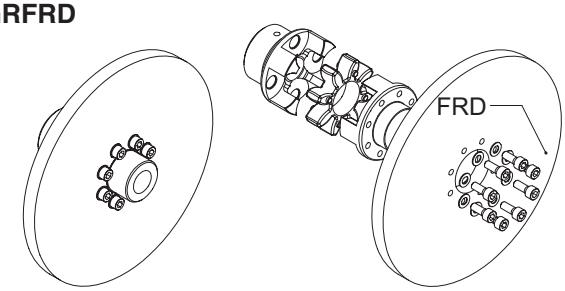

TRASCO® Coupling Weights and Moments of Inertia

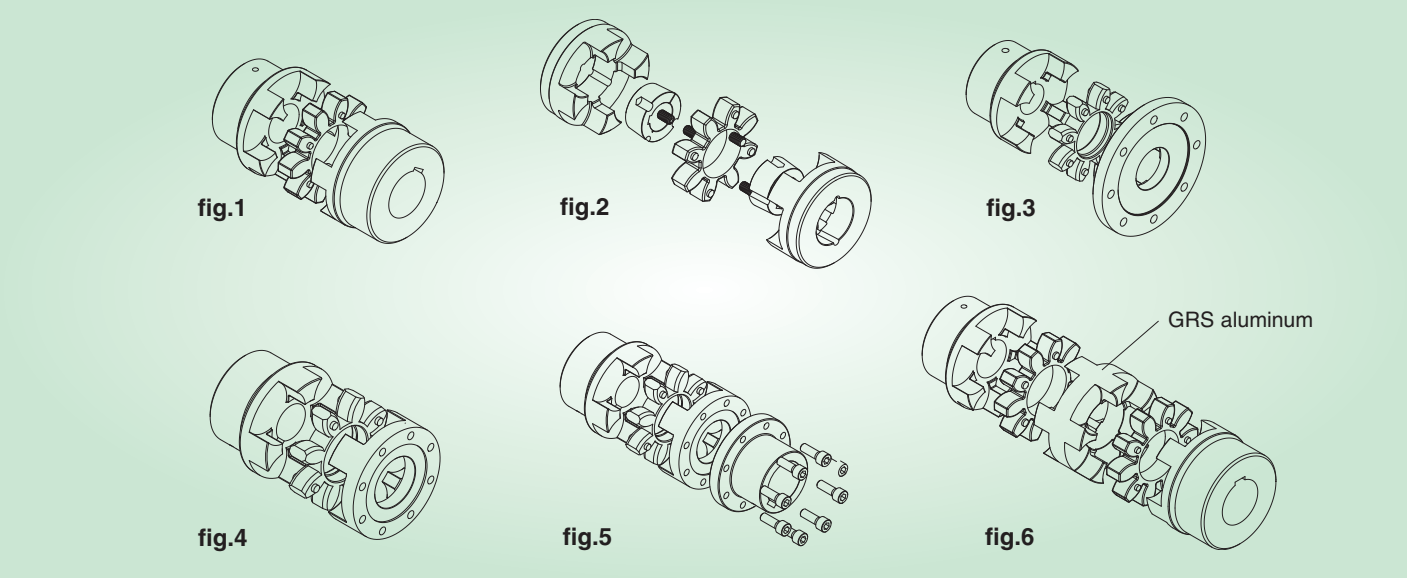

Size		GR (A type) fig. 1	GR (B type) fig. 1	GR (AB type) fig. 1	GRALU (A type) fig. 1	GRALU (B type) fig. 1	GRALU (AB type) fig. 1	GRB fig. 2	GRF (CF) fig. 3	GRF (CFN) fig. 4	GRF (BFN) fig. 5	Spacer element GRS fig. 6
19/24	W [kg]	-	0,37	-	-	0,14	-	-	0,23	-	-	-
	J [kgm²]	-	0,0001	-	-	0,00004	-	-	0,00006	-	-	-
24/32	W [kg]	0,56	0,78	0,67	0,22	0,31	0,26	-	0,3	0,18	0,42	0,14
	J [kgm²]	0,0002	0,0004	0,0003	0,00008	0,00015	0,00012	-	0,0003	0,00009	0,00018	0,00006
28/38	W [kg]	0,92	1,25	1,1	0,36	0,49	0,43	1	0,58	0,3	0,69	0,22
	J [kgm²]	0,0005	0,0009	0,0007	0,0002	0,00034	0,00027	0,0007	0,0008	0,00021	0,00041	0,00013
38/45	W [kg]	1,97	2,5	2,25	0,77	0,98	0,9	1,7	0,8	0,313	0,933	0,35
	J [kgm²]	0,0017	0,0027	0,002	0,0007	0,001	0,00084	0,0026	0,001	0,00047	0,00097	0,00035
42/55	W [kg]	3,1	3,85	3,46	-	1,5	-	2,8	1,41	0,76	1,81	0,51
	J [kgm²]	0,0035	0,006	0,0047	-	0,002	-	0,0036	0,004	0,0012	0,0023	0,0007
48/60	W [kg]	4,2	5,3	4,75	-	2	-	4,7	1,62	0,89	2,27	0,67
	J [kgm²]	0,006	0,01	0,008	-	0,004	-	0,0078	0,005	0,0017	0,0035	0,001
55/70	W [kg]	6,4	7,8	7,1	-	-	-	5	2,82	1,47	3,55	0,97
	J [kgm²]	0,012	0,02	0,015	-	-	-	0,012	0,012	0,0035	0,007	0,002
65/75	W [kg]	9,7	11,8	10,8	-	-	-	6,9	3,46	1,89	4,89	1,43
	J [kgm²]	0,024	0,035	0,03	-	-	-	0,014	0,017	0,0059	0,0123	0,004
75/90	W [kg]	15,2	20,8	18	-	-	-	14,8	5,03	3	7,86	2,2
	J [kgm²]	0,051	0,082	0,07	-	-	-	0,065	0,032	0,0125	0,0275	0,009
90/100	W [kg]	26,2	30,2	28,2	-	-	-	35,4	7,9	4,87	13,54	3,9
	J [kgm²]	0,13	0,17	0,15	-	-	-	0,162	0,073	0,033	0,108	0,025
100/110	W [kg]	32,6	-	-	-	-	-	-	13,5	7,55	20,15	-
	J [kgm²]	0,22	-	-	-	-	-	-	0,139	0,063	0,14	-
110/125	W [kg]	45,5	-	-	-	-	-	-	18,8	10,15	27,05	-
	J [kgm²]	0,38	-	-	-	-	-	-	0,255	0,11	0,242	-
125/145	W [kg]	68,8	-	-	-	-	-	-	27,4	14,9	40,9	-
	J [kgm²]	0,76	-	-	-	-	-	-	0,463	0,21	0,48	-

Weight and moments of inertia are calculated on hubs with max diameter bore.

Tables for TRASCO® couplings with taper or splined bores

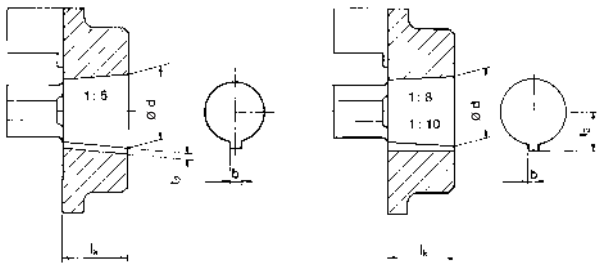

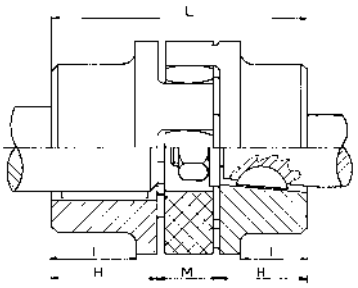

Taper 1:5 per:
BOSCH - BUCHER- LEDUC - DÜSTERLOH

Code	ø d + 0,05	b JS9	t2 + 0,1	lk
a1	9,85	2	1	11,5
a2	16,85	3	1,8	18,5
a3	19,85	4	2,2	21,5
a4	21,95	3	1,8	21,5
a5	24,85	5	2,9	26,5
a6	29,85	6	2,6	31,5
a7	34,85	6	2,6	36,5
a8	39,85	6	2,6	41,5

Taper 1:8 per:
ATOS - CASAPPA - GARBE LAHMEYER - JOTTI & STROZZI MARZOCCHI - SALAMI - SAUER-FLUID

Code	ø d + 0,05	b + 0,05	t2 + 0,1	lk
b1	9,7	2,4	6	17
b2	11,6	3	7,1	16,5
b3	13	2,4	7,3	21
b4	14	3	8,5	17,5
b5	14,3	3,2	8,5	19,5
b6	17,287	3,2	9,6	24
b7	17,287	4	10,3	24
b8	17,287	3	9,7	24
b9	22,002	3,99	12,4	28
b10	25,463	4,78	15,1	36
b11	25,463	5	15,5	36
b12	27	4,78	15,3	32,5
b13	28,45	6	15,1	38,5
b14	33,176	6,38	18,8	44
b15	33,176	7	18,8	44
b16	43,057	7,95	3,378	51
b17	41,15	8	3,1	42,5

Taper 1:10 per:
PARKER HANNIFIN NMF - TEVES

Code	ø d + 0,05	b JS9	t2 + 0,1	lk
c1	19,95	5	12,1	32
c2	24,95	6	14,1	45
c3	29,75	8	17	50

SAE splined profile

Code	Size	Head	Pitch	N. of teeth	
PH-S	5/8”	14,28	16/32	9	30°
PI-S	3/4”	17,46	16/32	11	30°
PB-S	7/8”	20,63	16/32	13	30°
PB-BS	1”	23,81	16/32	15	30°
PJ	1 1/8”	26,98	16/32	17	30°
PC-S	1 1/4”	29,63	dic-24	14	30°
PA-S	1 3/8”	33,33	16/32	21	30°
PD-S	1 1/2”	36,51	16/32	23	30°
PE-S	1 3/4”	42,86	16/32	27	30°
PF	2 9/16”	63,5	16/32	40	30°

DIN 5482

Code	Size	Head	Pitch	N. of teeth	Tolerance
P 8217	A 17 x 14	14,4	1,6	9	0,6
P 8228	A 28 x 25	26,25	1,75	15	0,302
P 8230	A 30 x 27	28	1,75	16	0,327
P 8235	A 35 x 31	31,5	1,75	18	0,676
P 8240	A 40 x 36	38	1,9	20	0,049
P 8245	A 45 x 41	44	2	22	0,181
P 8250	A 50 x 45	48	2	24	0,181

DIN 5480

Size	Head	Pitch	N. of teeth
20 x 1 x 18 x 7 H	18	1	18
20 x 1,25 x 14 x 7 H	17,5	1,25	14
25 x 1,25 x 18 x 7 H	22,5	1,25	18
30 x 2 x 13 x 7 H	26	2	13
30 x 2 x 14 x 7 H	26	2	14
35 x 2 x 16 x 7 H	32	2	16
40 x 2 x 18 x 7 H	36	2	18
45 x 2 x 21 x 7 H	41	2	21
48 x 2 x 22 x 9 H	44	2	22
50 x 2 x 24 x 7 H	48	2	24

JUBOFLEX® elastic coupling

Description

JUBOFLEX® couplings are made of:

- one elastic element made of pre-compressed, natural rubber, reinforced with steel to be fitted with fixing screws and a metallic band (to be removed after mounting);
- two metallic hubs made of forged steel (size 120 produced in cast iron).

They are produced:

- for mounting with SER-SIT® taper bushing from size 4 to 25;
- solid hub from size 35 to 120.

GJB4 - GJB25

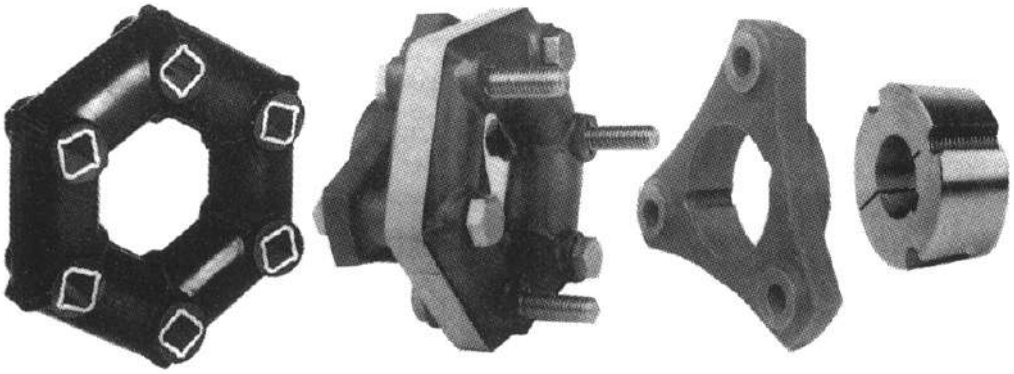

GJ4 - GJ120

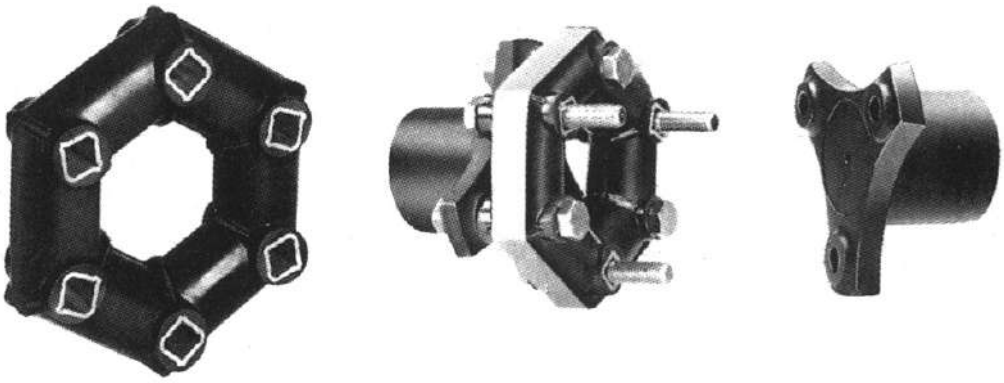

Features

JUBOFLEX® coupling has exceptional elastic properties.
In fact, it allows for:

- an excellent dampening effect of the load peaks;
- high safety factor and a very high resistance to alternating deformation, thanks to pre-compression;
- possibility of bearing misalignment values rarely possible with other couplings.

In this way it avoids the need of a precise alignment of the machines to be coupled. It is recommended to remove the metallic band of the elastic element after the coupling is mounted; pre compression will be assured by the fixing screws.

Coding

Codification of the JUBOFLEX® couplings is:

- GJ complete coupling solid hub;
- GJM hub;
- AJ elastic element.

To identify the desired size use the nominal torque of the coupling.

E.G.: GJ4 = complete coupling (2 hubs + 1 elastic element) with nominal torque of 40 Nm.

JUBOFLEX® elastic coupling - solid hub

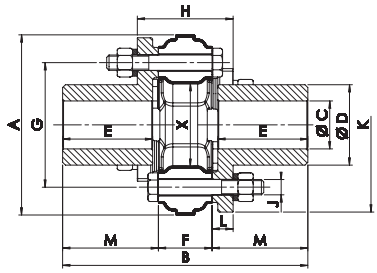

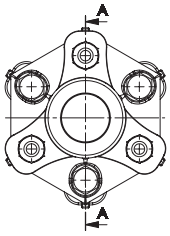

GJ4 - GJ70

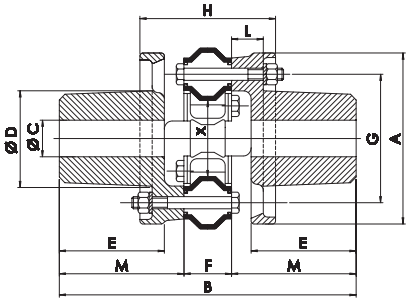

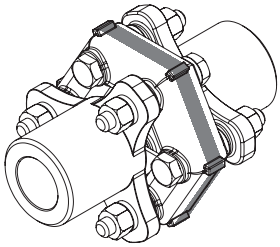

GJ120

Size	C min [mm]	C max [mm]	A [mm]	B [mm]	D [mm]	E [mm]	F [mm]	G [mm]	H [mm]	J [mm]	K [mm]	L [mm]	M [mm]	X [mm]	W [kg]
GJ4	-	30	91	128	42	47	28	65	50	8	87	11	50	23	2
GJ9	-	40	117	172	56	66	32	85	60	10	113	14	70	35	3
GJ16	-	48	142	196	68	70	46	100	80	12	135	17	75	40	5
GJ25	-	60	181	247	90	93	51	132	93	14	172	21	98	63	12
GJ35	-	70	202	284	105	109	54	150	96	18	196	21	115	68	18
GJ50	-	75	232	322	115	124	62	170	108	20	225	23	130	75	25
GJ70	-	80	263	346	122	133	68	190	116	20	246	24	139	82	32
GJ120*	60	100	280	486	156	172	78	210	222	20	-	52	204	110	57

*= 8 lobes execution

JUBOFLEX® elastic coupling for mounting SERSIT® taper bushing

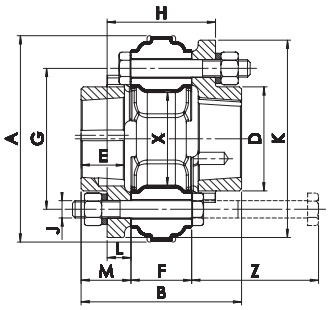

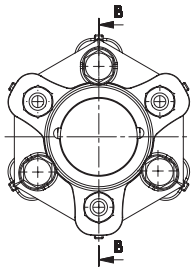

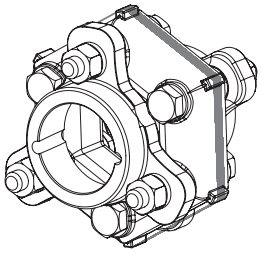

Size	SER-SIT® taper bushing	A [mm]	B [mm]	D [mm]	E [mm]	F [mm]	G [mm]	H [mm]	J [mm]	K [mm]	L [mm]	M [mm]	X [mm]	W [mm]	Z [mm]
GJB4	1108	91	74	48	20	28	65	54	8	91	11	23	23	0,8	65
GJB9	1210	117	90	60	25	32	85	65	10	121	14	29	35	1,6	75
GJB16	1610	142	106	70	25	46	100	81	12	140	17	30	40	2,7	90
GJB25	2012	181	121	95	30	51	132	91	14	177	21	35	63	5	100

SERSIT® taper bushing

Type		Diameter of the bore (H7) Keyway according to DIN 6885 sheet 1 - JS9	Length [mm]	Diam. max.	Screws n°	Screws withworth	Screws Length [mm]	Screws Sets screews wrench type	Ms [Nm]
1108 (28.20)	[mm]	9 10 11 12 14 15 16 18 19 20 22 24 25 **26 27 28**	22,3	38	2	1/4	13	M3	5,5
	[inches]	3/8 - 1/2 - 5/8 - 3/4 - 7/8 - 1 - **1 1/8**							
1210 (30.25)	[mm]	11 12 14 15 16 18 19 20 22 24 25 26 28 **30 32**	25,4	47	2	3/8	16	M5	20
	[inches]	1/2 - 5/8 - 3/4 - 7/8 -1 -1 1/8 **-1 1/4**							
1610 (40.25)	[mm]	12 14 15 16 18 19 20 22 24 25 26 28 30 32 35 38 **40 42**	25,4	57	2	3/8	16	M5	20
	[inches]	3/8 - 1/2 - 5/8 - 3/4 - 7/8 -1 -1 1/8 -1 1/4 -1 3/8 -1 1/2 **-1 5/8**							
2012 (50.30)	[mm]	14 15 16 18 19 20 22 24 25 26 28 30 32 35 38 40 42 45 48 **50**	31,8	70	2	7/16	22	M5	20
	[inches]	5/8 -3/4 - 7/8 -1 -1 1/8 -1 1/4 -1 3/8 -1 1/2 -1 5/8 -1 3/4 -1 7/8 - **2**							

Bore diameters in bold type are made in steel instead of cast iron.

Technical Data

Size	T_{KN} [Nm]	T_{Kmax} [Nm]	φ [°]	n_{max} [min^{-1}]	Nr	Screws/ Type
GJ4	40	120	8	6.000	6	M8 x 50
GJ9	90	270	8	5.000	6	M10 x 65
GJ16	160	480	8	4.500	6	M12 x 80
GJ25	250	750	7	3.500	6	M14 x 90
GJ35	350	1050	7	3.000	6	M18 x 100
GJ50	500	1500	7	2.800	6	M20 x 115
GJ70	700	2100	8	2.400	6	M20 x 115
GJ120	1200	3600	6,5	2.400	8	M20 x 150

T_{KN}	Coupling nominal torque	Nm
T_{Kmax}	Coupling maximum torque	Nm
φ	Torsion angle	°
n_{max}	Maximum rpm	min^{-1}
Nr	Number of screws	

Order form

Hub — **GJM 16**

GJM: JUBOFLEX® solid hub
GJMB: JUBOFLEX® for mounting SER-SIT® taper bushing

Size

Elastic element — **AJ 16**

AJ: elastic element

Size

Power Rating

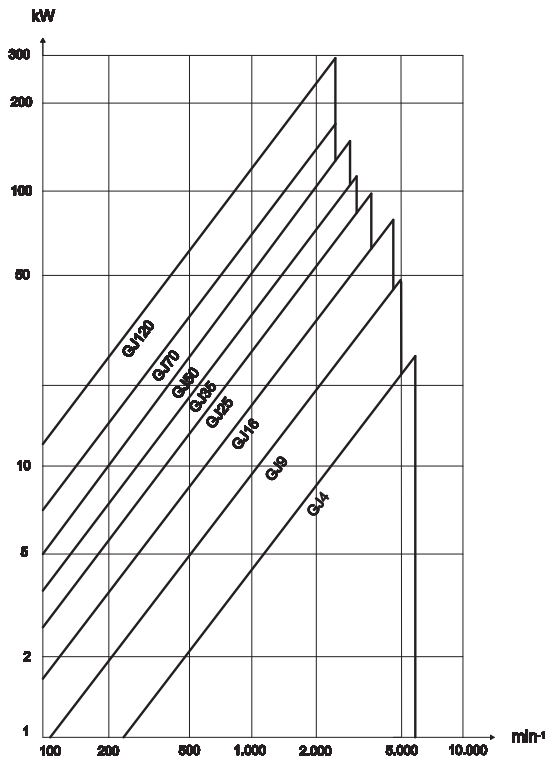

Radial Misalignment

Nominal torque [Nm]	Radial misalignment 1.500 rpm [mm]
40	0,7
90	0,9
160	1,4
250	1,5
350	1,8
500	2
700	2,1
1200	2,4

Angular Misalignment

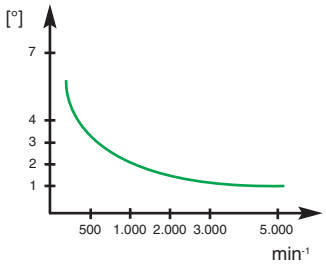

Mounting

The precompression, for the initial mounting, is achieved by securing the metallic band around the elastic element (all elements are supplied with metallic band of precompression).

To mount the coupling, tighten the three screws not adjacent to the bores of the elastic element to the three arms of one hub and the three remaining bores of the elastic element to the other hub.

Tighten the screws with the torques indicated in the table.
Cut the metallic band when coupling is mounted.

Size	Ms [Nm]
GJ4	21
GJ9	41
GJ16	72
GJ25	113
GJ35	240
GJ50	350
GJ70	350
GJ120	350

"P" elastic coupling

Hubs made in brass and spider in rubber. Suitable for low power.

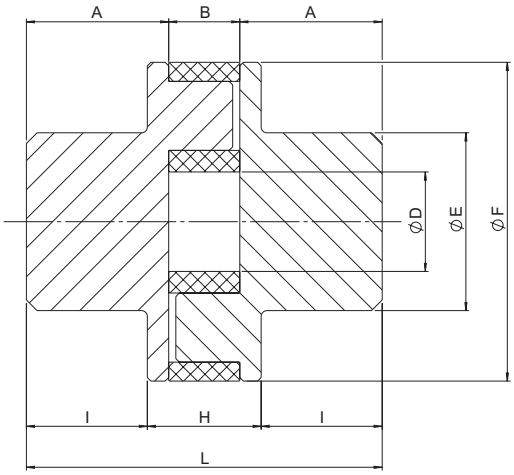

Size	A [mm]	B [mm]	D [mm]	E [mm]	F [mm]	H [mm]	I [mm]	L [mm]	T_{KN} [Nm]	T_{Kmax} [Nm]
P 35	18	7	12	20	35	12	15	43	5	10
P 45	20	10	14	25	45	16	17,5	51	10	20

Misalignment

Size	Δk_a [mm]	Δk_r [mm]	Δk_w [°]
P 35	1	0,25	2
P 45	1	0,25	2

Highest misalignment values cannot simultaneously act on the hub.

Order form

Hub **GOMP 35**

GOMP: "P" hub

Size

Spider **AO 16**

AO: spider

Size

GOMP

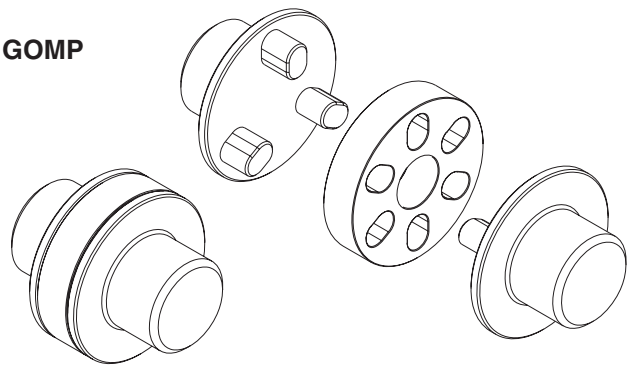

T_{KN}	Coupling nominal torque	Nm
T_{Kmax}	Coupling maximum torque	Nm
ΔK_a	Maximum axial misalignment	mm
ΔK_r	Maximum radial misalignment	mm
ΔK_w	Maximum angular misalignment	°

Bolt couplings

The bolt coupling is a rigid coupling. It is made of two halves, which are cast iron grade GG25 connected by means of bolts. It is maintenance and lubrication free. Additionally, its construction prevents fretting corrosion and allows for easy mounting and dismounting.
The bolt coupling is designed to connect horizontal shafts with similar diameters. If different application, contact our technical department.
The indicated torque values refer to couplings without keyways. To transmit higher torques it is possible to machine keyways by following DIN 6885/1.
The values of the torque have been calculated with a coefficient of friction equal to 0,15 and with a screw tightening torque according to the indicated value (DIN 912 - 8.8).

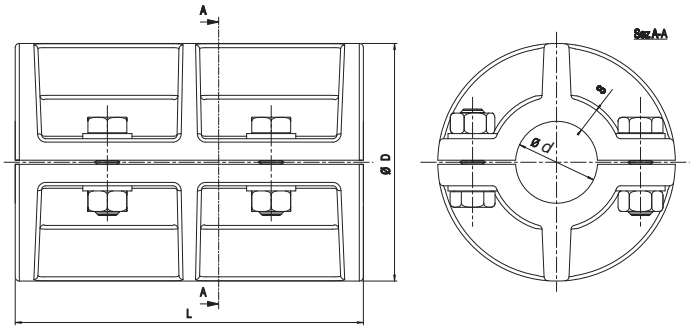

Size	d [mm]	D [mm]	L [mm]	S [mm]	Type of screws	Nr. screws	n_{max} [min^{-1}]	Ms [Nm]	M_T [Nm]	
									Without keyway	With keyway
20	20	74	110	5,5	M8	4	3098	25	20	25
25	25	74	115	6,5	M8	4	3098	25	20	40
30	30	96	145	8	M10	4	2388	49	35	60
35	35	103	158	7	M10	4	2226	49	40	80
40	40	116	174	7	M12	4	2029	86	65	100
45	45	113	190	7	M12	4	1976	86	75	125
50	50	120	205	7	M12	6	1910	86	120	150
55	55	140	220	11	M14	6	1637	135	200	600
60	60	140	242	13	M14	6	1637	135	215	850
65	65	150	250	13	M14	6	1528	135	235	1250
70	70	160	260	15	M14	6	1433	135	255	1700
80	80	185	279	16	M14	6	1239	135	290	2500
90	90	210	310	20	M16	8	1091	210	310	3800
100	100	225	343	20	M16	8	1019	210	600	5400
110	110	250	390	22	M24	8	920	710	-	7500
120	120	275	430	27,5	M24	10	870	710	-	11000
125	125	275	430	25	M24	10	870	710	-	11000
140	140	325	490	35	M27	10	800	1050	-	15000
160	160	365	560	40	M27	12	750	1050	-	23000

Order form

Coupling **GB 100**

GB: bolt coupling

Size

n_{max}	Maximum rpm	min^{-1}
M_S	Screw tightening torque	Nm
M_T	Transmissible torque moment	Nm

GB

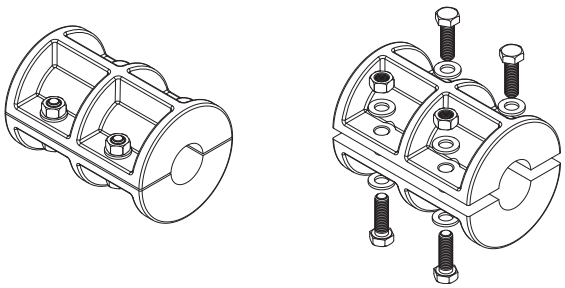

SIT EX® Teeth Coupling

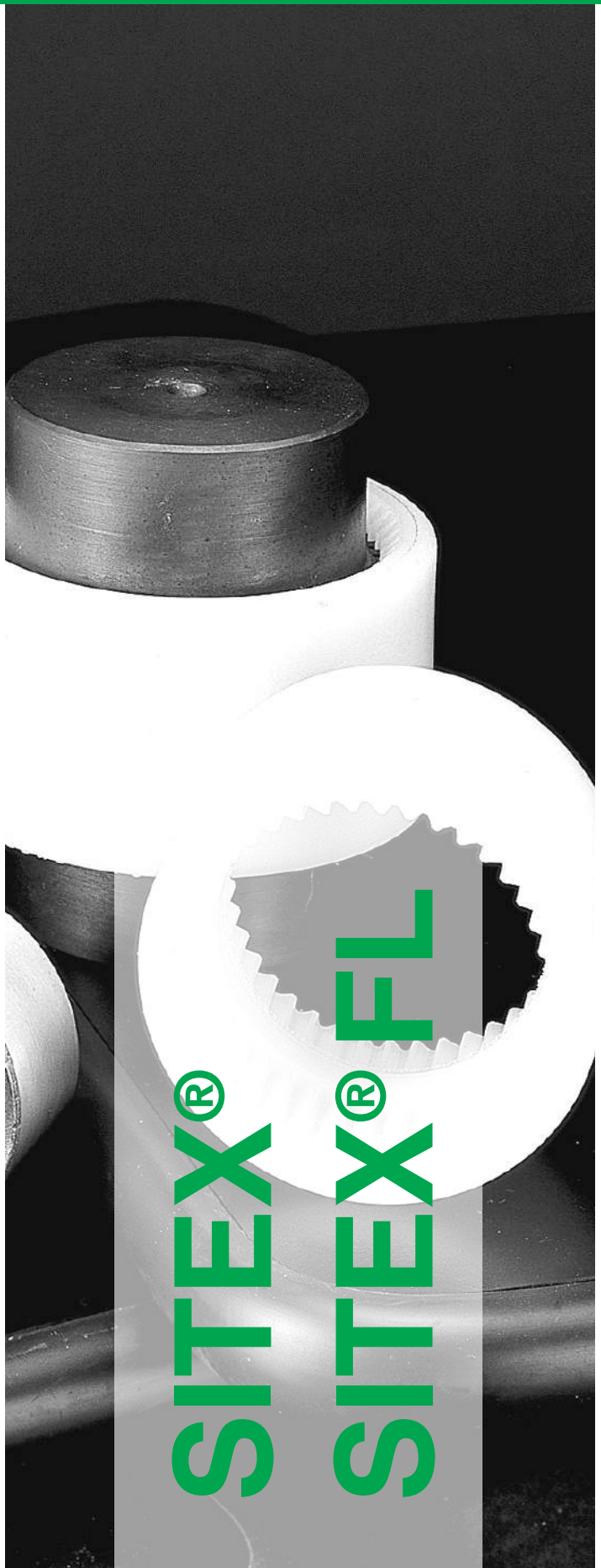

SITEX®
SITEX® FL

Contents

SITEX® teeth couplings

Description

SITEX® couplings consist of two toothed hubs which are connected with one internally toothed sleeve. The hubs are made of steel and the teeth, which are both profiled and section crowned, are milled. The sleeve is manufactured from stabilized 6.6 super-polyamide resin.

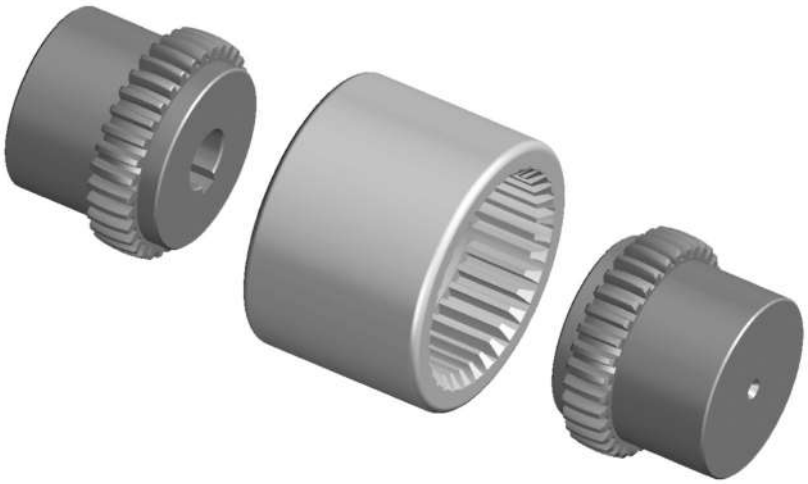

Features

SITEX® couplings are members of the elastic coupling family range. Sitex couplings are well suited for applications with axial, radial, and angular displacement of the connected shafts. The double cardanic action eliminates the imposition of loads on the shafts which results from radial and axial misalignment.
The torsional rigidity of the sleeve prevents angular speed variation.
The combination of steel hubs with Polyamide sleeve makes the coupling maintenance and lubrication free.
The particular toothed profile prevents contact of tooth edges with the sleeve, ensuring long life of the coupling.

Performance

Mounting can be in both the horizontal and vertical planes. Installation is simple and quick, which lowers installation costs.
The coupling is suitable for operating in temperatures ranging from - 25 °C to + 90 °C.
For short intervals, temperatures of + 125 °C can be tolerated.
Components of the coupling are resistant to all types of lubricants and hydraulic fluids.

ATEX Directive 2014/34/EU

It is possible to ask for specific certification for use in hazardous area according to ATEX Directive 2014/34/EU.
SITEX® couplings are available with specific mounting/operating instruction manual and conformity.
For information, please contact our technical office.

Dimensional characteristics

Due to compact dimensions and excellent performances, SITEX® couplings may be used in a wide range of applications. Couplings are available from stock, both the standard and the "long" hub execution, which entirely covers the motor shaft.

SITEX hubs are available with certain stock bores as listed below. The standard solid hub has a pilot center concentric to the hub OD and can be bored to specific needs.
Approved according to ATEX Directive.

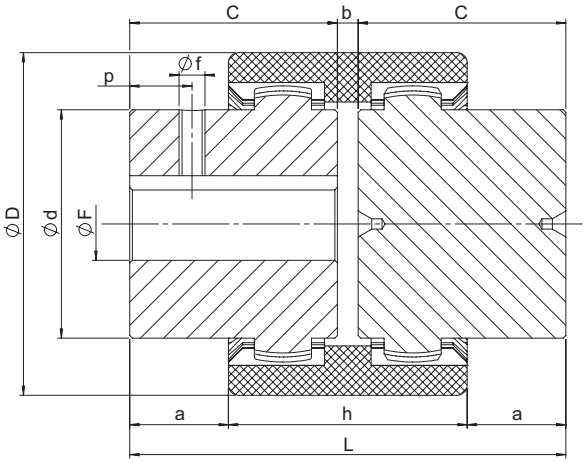

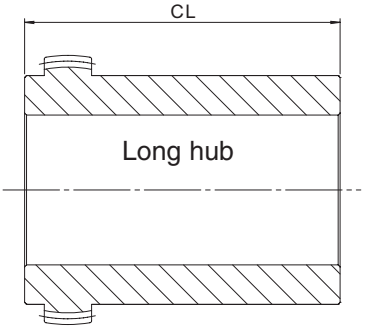

Size	D [mm]	d [mm]	F (H7)			C [mm]	CL [mm]	b [mm]	a [mm]	h [mm]	L [mm]	f [mm]	p [mm]
			min	max	UNI keyway and set-screw* [mm]								
14	40	24,5	8	14	11 - 14	23	30	4	6,5	37	50	M5	6
19	48	30	8	19	11 -14 -19	25	-	4	8,5	37	54	M5	6
24	52	35	11	24	14 - 19 - 20 - 22 - 24	26	50	4	7,5	41	56	M5	6
28	66	43	11	28	16 - 19 - 22 - 24 - 28	40	60	4	18,5	47	84	M8	10
32	76	50	14	32	22 - 24 - 28 - 32	40	60	4	17,5	48	84	M8	10
38	83	58	14	38	24 - 28 - 32 - 38	40	80	4	18	48	84	M8	10
42	92	65	14	42	25 - 28 - 32 - 38 - 42	42	110	4	18,5	51	88	M8	10
48	100	68	19	48	32 - 38 - 42 - 48	50	110	4	27	50	104	M8	10
65	142	96	19	65	38 - 42 - 48 - 55 - 60	70	140	4	35,5	73	144	M10	20
80	175	124	-	80	-	90	-	6	46,5	93	186	M10	20
100	210	152	36	100	-	110	-	8	63	102	228	M10	20
125	270	192	45	125	-	140	-	10	78	134	290	M10	20

* = Up to size 24, set-screw is 180° from keyway; from size 28 set-screw is set onto the keyway.
Keyway according to DIN 6885 sheet 1 - JS9

Order form

Hub **GDM 48 F32**

- GDM: SITEX® hub
- Size
- L: long hub execution
  F...: bore diameter

Manicotto **AD 48**

- AD: SITEX® sleeve
- Size

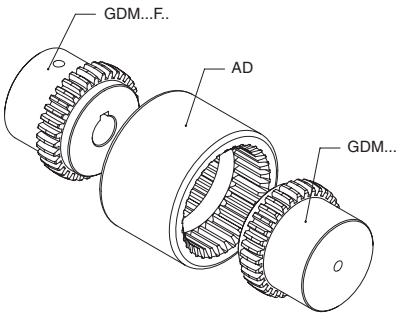

Standard couplings

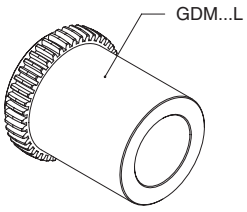

Long hub execution

SITEX® coupling selection

Selection according to torque

The maximum starting torque of the driver or driven machine must not exceed the maximum torque capacity of SITEX®.
With uniform loading and well aligned shafts, SITEX® can be operated at all torques up to the maximum. In case of irregular torque, consider that the SITEX® coupling can bear peak loads up to 3 times the nominal torque indicated.

Technical characteristics

Size	T_{KN} [Nm]	T_{Kmax} [Nm]	T_{Kw} [Nm]	[kW]										n_{max} [min⁻¹]	W* [kg]	J* [kg.m²]	ΔK_a [mm]	ΔK_r [mm]	ΔK_w [°]
				n = 500 [min⁻¹]		n = 750 [min⁻¹]		n = 1000 [min⁻¹]		n = 1500 [min⁻¹]		n = 3000 [min⁻¹]							
				std	max	std	max	std	max	std	max	std	max						
14	10	30	5	0,5	1,6	0,8	2,4	1,0	3,1	1,6	4,7	3,1	9,4	14.000	0,18	0,000026	±1	±0,3	+1
19	16	48	8	0,8	2,5	1,3	3,8	1,7	5,0	2,5	7,5	5,0	15,1	11.800	0,24	0,000054	±1	±0,3	±1
24	21	63	10,5	1,1	3,3	1,6	4,9	2,2	6,6	3,3	9,9	6,6	19,8	10.500	0,30	0,000088	±1	±0,3	±1
28	45	135	22,5	2,4	7,1	3,5	10,6	4,7	14,1	7,1	21,2	14,1	42,4	8.500	0,73	0,000312	±1	±0,4	±1
32	60	180	30	3,1	9,4	4,7	14,1	6,3	18,8	9,4	28,3	18,8	56,5	7.600	0,99	0,000572	±1	±0,4	±1
38	81	243	40,5	4,2	12,7	6,4	19,1	8,5	25,4	12,7	38,2	25,4	76,3	6.700	1,20	0,000877	±1	±0,4	±1
42	100	300	50	5,2	15,7	7,9	23,6	10,5	31,4	15,7	47,1	31,4	94,2	6.000	1,62	0,001467	±1	±0,4	±1
48	142	426	71	7,4	22,4	11,2	33,6	14,9	44,8	22,3	67,1	44,6	134,3	5.580	1,79	0,001869	±1	±0,4	±1
65	380	1140	190	19,9	59,7	29,8	89,5	39,8	119,4	59,7	179,1	119,4	358,1	4.000	5,28	0,010542	±1	±0,6	±1
80	700	2100	350	36,6	109,9	55,0	164,9	73,3	219,9	109,9	329,8	219,9	659,7	3.100	11,7	0,036774	±1	±0,7	±1
100	1210	3630	605	63,4	190,1	95,0	285,1	126,7	380,1	190,1	570,2	380,1	1140,3	3.000	20,4	0,095742	±1	±0,8	±1
125	2500	7500	1250	130,9	392,7	196,3	589,0	261,8	785,3	392,7	1178,0	-	-	2.100	43,3	0,329397	±1	±1,1	±1

*= Values are for complete couplings, max bore diameter, only.

The values shown in the table for radial and angular misalignment, must be adjusted in cases where they are simultaneously acting on the coupling.
The sum of the admissible value (A) and the respective values shown in the table must be lower or equal to 1.

$$\frac{\Delta K_{rA}}{\Delta K_r} + \frac{\Delta K_{wA}}{\Delta K_w} \leq 1$$

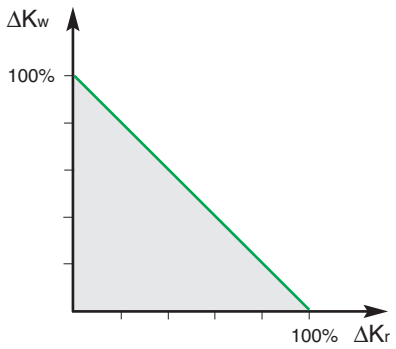

T_{KN}	Coupling nominal torque	Nm
T_{Kmax}	Coupling maximum torque	Nm
W	Weight	kg
J	Coupling moment of inertia	kgm^2
ΔK_a	Maximum axial misalignment	mm
ΔK_r	Maximum radial misalignment	mm
ΔK_w	Maximum angular misalignment	°
n_{max}	Maximum rpm	min^{-1}

Mounting instructions

- Attach the hubs to the shafts, taking care to align the inner surfaces with the corresponding shaft ends.
- Insert the sleeve on the two hubs adjusting the distance (dimension “b”) of the same ones trying at the same time to align the two shafts as much as possible.
- Tighten into position the two elements to be coupled.
- Before rotating the coupling, be sure the sleeve is free to move axially.

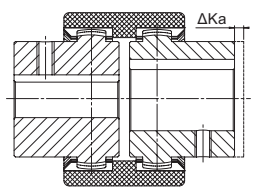

axial misalignment

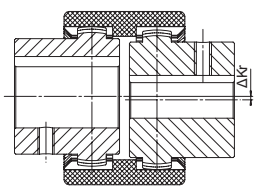

radial misalignment

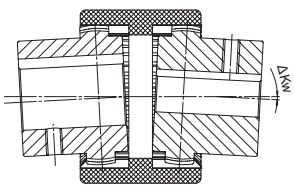

angular misalignment

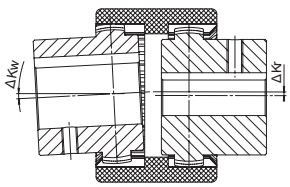

both angular and radial misalignment

Tables for SITEX® couplings with taper or splined bores

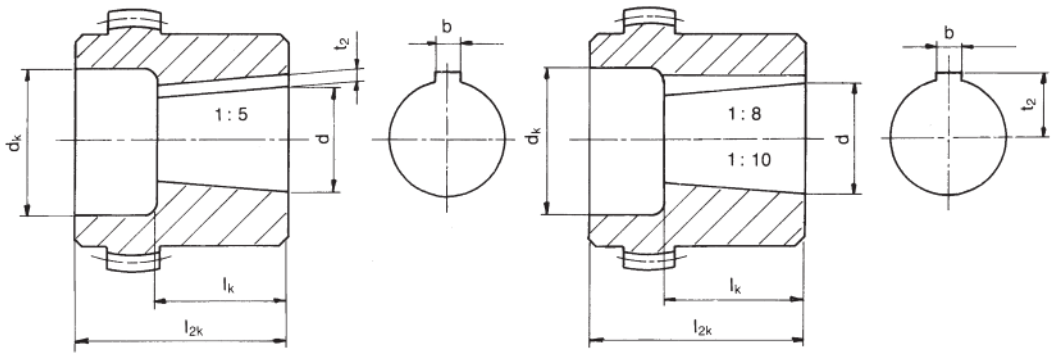

Taper 1 : 5 for
BOSCH - BUCHER -LEDUC - DÜSTERLOH

Size	dø + 0,05	b JS9	t²+0,1	lk	14		19		24		28		32		38		42		48		65	
					dk	l2k	dk	l2k	dk	l2k	dk	l2k	dk	l2k	dk	l2k	dk	l2k	dk	l2k	dk	l2k
a1	9,85	2	1	11,5	18	23	22	25	24	26	35	26	36	26	45	26						
a2	16,85	3	1,8	18,5			25	30	28	30	35	40	36	40	45	40	45	42	45	42	45	50
a3	19,85	4	2,2	21,5					28	36	35	40	36	40	45	40	45	42	45	42	45	50
a4	21,95	3	1,8	21,5					30	26	32	40	32	40	42	40	45	42				
a5	24,85	5	2,9	26,5							35	40	36	40	45	40	45	42	45	42	55	50
a6	29,85	6	2,6	31,5											45	55	45	55	45	55	55	55
a7	34,85	6	2,6	36,5															52	60	55	60
a8	39,85	6	2,6	41,5															52	60	65	70

Taper 1 : 8 for
ATOS - CASAPPA - GARBE LAHMEYER - JOTTI & STROZZI - MARZOCCHI - SALAMI - SAUER-FLUID

Size	dø + 0,05	b JS9	t²+0,1	lk	14		19		24		28		32		38		42		48		65	
					dk	l2k	dk	l2k	dk	l2k	dk	l2k	dk	l2k	dk	l2k	dk	l2k	dk	l2k	dk	l2k
b1	9,7	2,4	6	17	18	26	19	25	24	26	35	30	36	30	36	30						
b2	11,6	3	7,1	16,5	18	23			26	26	32	30										
b3	13	2,4	7,3	21					26	30	32	30			32	30						
b4	14	3	8,5	17,5	20	23	24	30	24	30	32	30	36	40								
b5	14,3	3,2	8,5	19,5																		
b6	17,287	3,2	9,6	24					28	35	32	40	36	40	42	40	45	42	45	42	45	50
b7	17,287	4	10,3	24					28	35	32	40	36	40	42	40	45	42	45	42	45	50
b8	17,287	3	9,7	24					28	35					42	40			45	42		
b9	22,002	3,99	12,4	28							32	40	36	40	42	40	45	42	45	42	55	50
b10	25,463	4,78	15,1	36							34	50	36	50	42	50	45	50	45	50	55	62
b11	25,463	5	15,5	36							34	50					45	50	45	50	55	62
b12	27	4,78	15,3	32,5											42	50						
b13	28,45	6	15,1	38,5											42	60	45	60				
b14	33,176	6,38	18,8	44											44	60	45	60	45	60	55	62
b15	33,176	7	18,8	44													45	60			55	62
b16	43,057	7,95	3,378	51																		
b17	41,15	8	3,1	42															48	60	55	60

Taper 1 : 10 for
PARKER HANNIFIN NMF - TEVES

Size	d ø + 0,05	b JS9	t²+0,1	lk	014		19		24		28		32		38		42		48		65	
					dk	l2k	dk	l2k	dk	l2k	dk	l2k	dk	l2k	dk	l2k	dk	l2k	dk	l2k	dk	l2k
c1	19,95	5	12,1	32							35	50			42	50	45	50	45	50		
c2	24,95	6	14,1	45									36	55			45	60	45	60	55	60
c3	29,75	8	17	50													54	60	54	60	55	70

SITEX® Nylex

SITEX Nylex couplings are made of 100% Polyamide.
Two executions are available:
- **CV**: in 2 parts (1 hub and one sleeve including the hub);
- **C**: in 3 parts (2 hubs and one sleeve).

Designed for light applications, low cost and available with finished bore keyway and thread for set screw.
Temperature range: - 25 °C ÷ + 90 °C.
Approved according to ATEX Directive.

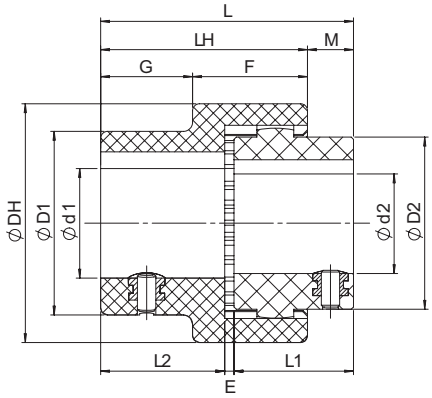

CV

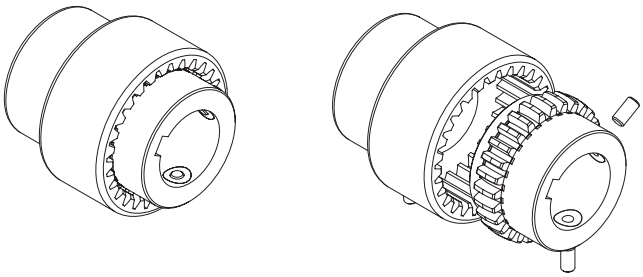

Size	d1 [mm]			D1 [mm]	d2 [mm]			D2 [mm]	DH [mm]	L1 [mm]	L2 [mm]	E [mm]	L [mm]	LH [mm]	M [mm]	F [mm]	G [mm]	T_{KN} [Nm]	T_{Kmax} [Nm]	T_{KW} [Nm]	n_{max} [min^{-1}]
	min	max	UNI keyway and set screw [mm]		min	max	UNI keyway and set screw [mm]														
14	6	14	14	25	6	14	7-9-10-11-12-14	26	40	23	23	2	48	40	8	23	17	5	10	2,5	6.000
19	14	19	18-19	31,5	14	19	14-17-19	40	48	25	25	2	52	42	9	23	19	8	16	4	6.000
24	10	24	19-20-24	37,5	10	24	10-14-16-19-20-24	40	52	26	26	2	54	45	10	25	20	12	24	6	6.000

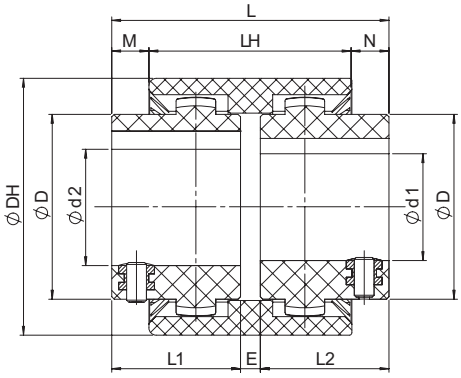

C

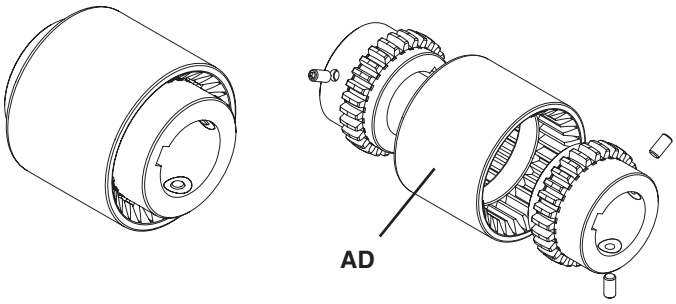

Taglia	d1-d2 [mm]			D [mm]	DH [mm]	L1 [mm]	L2 [mm]	E [mm]	L [mm]	LH [mm]	M [mm]	N [mm]	T_{KN} [Nm]	T_{Kmax} [Nm]	T_{KW} [Nm]	n_{max} [min^{-1}]
	min	max	UNI keyway and set screw [mm]													
14	6	14	7-9-10-11-12-14	25	40	23	23	4	50	37	6,5	6,5	5	10	2,5	6.000
19	14	19	14-17-19	31,5	48	25	25	4	54	37	8,5	8,5	8	16	4	6.000
24	10	24	10-14-16-19-20-24	37,5	52	26	26	4	56	41	7,5	7,5	12	24	6	6.000

Order form

Hub — **GDN 14 F14**

- GDN: SITEX NYLEX® hub
- GDNV: SITEX NYLEX® sleeve hub
- Size
- F...: bore diameter

C" execution sleeve — **AD 24**

- AD: SITEX NYLEX® sleeve
- Size

T_{KN}	Coupling nominal torque	Nm
T_{Kmax}	Coupling maximum torque	Nm
T_{KW}	Torque with reversal transmissible by the coupling	Nm
n_{max}	Maximum rpm	min^{-1}

SITEX® FL

Description

The SITEX® FL couplings are designed for optimizing the connections between reciprocating engines and driven equipment such as pumps, compressors, generators, etc.
SITEX® FL couplings consist of a steel hub and fiberglass reinforced polyamide flange which offers both mechanical strength and dimensional stability in a variety of temperature ranges.

The special teeth allow SITEX® FL couplings to compensate for small misalignments thus avoiding wear.
The steel-Polyamide coupling allows maintenance free continuous operation.
Approved according to ATEX Directive.

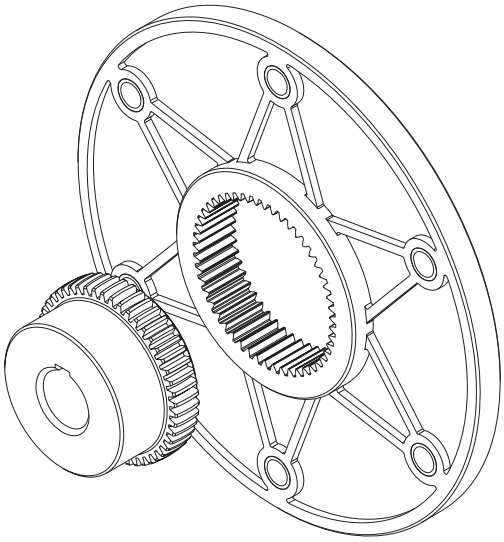

Main characteristics and advantages

Minimum dimensions: The entire coupling is usually installed inside an engine housing, minimizing the axial dimensions thus reducing the tools required for installation.

Axial misalignments: The hub toothing can move freely axially inside the Polyamide flange avoiding axial forces which may arise on the pump shaft.

Heat stability: The special fiberglass reinforced Polyamide flange is designed to operate in internal combustion engine environments without air cooling and up to 140° C.

Maintenance free: The SITEX® FL joints are maintenance and lubrication free.

Quick assembling: Blind assembly makes installation of the SITEX® FL quick and easy.

Angular misalignments: The special teeth allow angular misalignment correction, protecting the bearings against angular forces.

Stiffness: The stiffness of the SITEX® FL coupling allow for torsionally vibration-free operation.

The SITEX® FL couplings are used in connections between the flywheels of the internal combustion engines and: hydro-pumps, rotating pistons, and compressor blades.

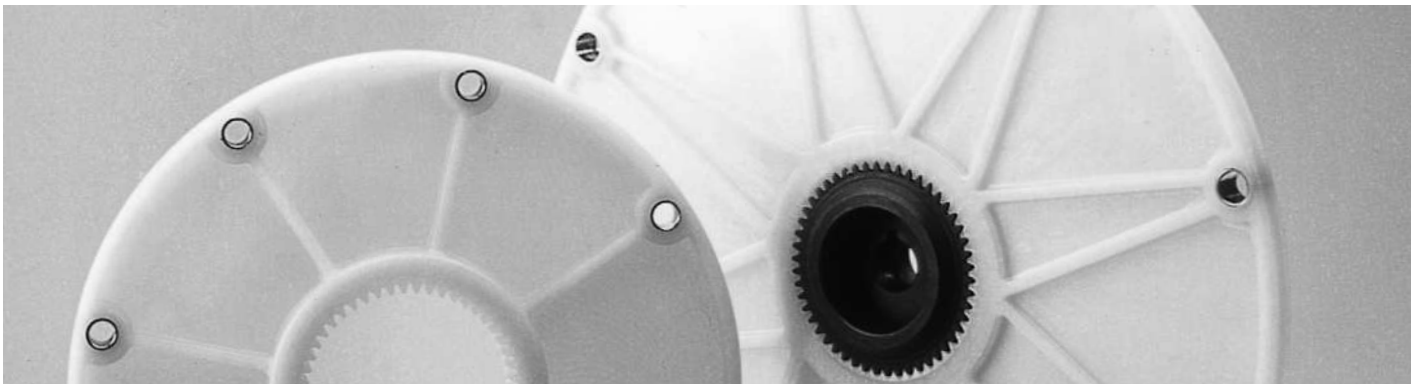

Flange dimensions in accordance with SAE J620

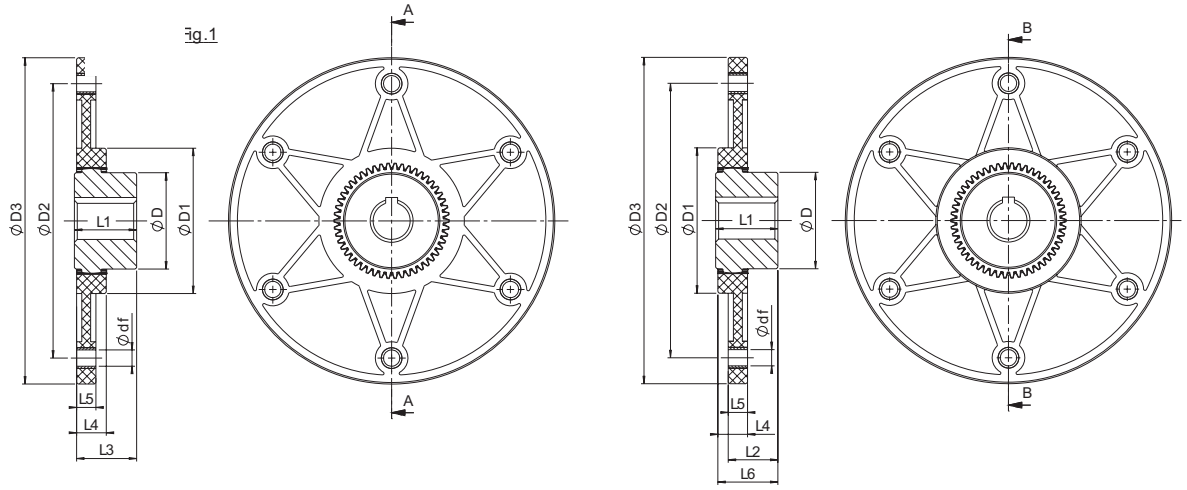

SAE flange size	Dimensions [mm]											
	Max. bore	D	D1	D2	D3	df x z	L1	L2	L3	L4	L5	L6
GDF 42 FL 6 1/2”	42	65	100	200,02	215,9	9 x 6	42	33	42	20	13	40
GDF 42 FL 7 1/2”	42	65	100	222,25	241,3	9 x 8	42	33	42	20	13	40
GDF 42 FL 8”	42	65	100	244,47	263,52	11 x 6	42	33	42	20	13	40
GDF 42 FL 10”	42	65	100	295,27	314,32	11 x 8	42	33	42	20	13	40
GDF 48 FL 6 1/2”	48	68	100	200,02	215,9	9 x 6	50	41	50	20	13	48
GDF 48 FL 7 1/2”	48	68	100	222,25	241,3	9 x 8	50	41	50	20	13	48
GDF 48 FL 8”	48	68	100	244,47	263,52	11 x 6	50	41	50	20	13	48
GDF 48 FL 10”	48	68	100	295,27	314,32	11 x 8	50	41	50	20	13	48
GDF 48P FL 6 1/2”	48	68	100	200,02	215,9	9 x 6	50	38	45	20	13	46
GDF 48P FL 7 1/2”	48	68	100	222,25	241,3	9 x 8	50	38	45	20	13	46
GDF 48P FL 8”	48	68	100	244,47	263,52	11 x 6	50	38	45	20	13	46
GDF 48P FL 10”	48	68	100	295,27	314,32	11 x 8	50	38	45	20	13	46
GDF 65 FL 8”	65	96	132	244,47	263,52	11 x 6	70	60	69	27	21	66
GDF 65 FL 10”	65	96	132	295,27	314,32	11 x 8	70	60	69	27	21	66
GDF 65 FL 11 1/2”	65	96	132	333,37	352,42	11 x 8	70	60	69	27	21	66
GDF 65P FL 8”	65	96	132	244,47	263,52	11 x 6	70	60	69	27	21	66
GDF 65P FL 10”	65	96	132	295,27	314,32	11 x 8	70	60	69	27	21	66
GDF 65P FL 11 1/2”	65	96	132	333,37	352,42	11 x 8	70	60	69	27	21	66
GDF 80 FL 11 1/2”	80	124	170	333,37	352,42	11 x 8	90	78	87	30	21	87

48P and **65P** are for hubs with over-sized toothed disc.

Order form

Hub **GDM 48 F32**

- GDM: SITEX® hub
- Size
- L: long hub execution
  F...: bore diameter

Flange **GDF 65 FL11-1/2**

- GDF: SITEX® FL Flange
- Bore
- SAE flange size

SITEX FL

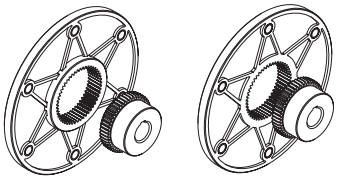

Special flange dimensions

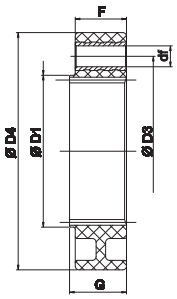

GDF 48 FL 125

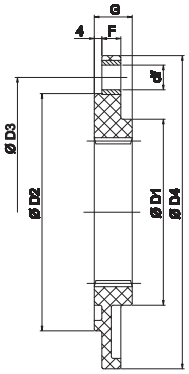

GDF 48 FL 165
GDF 48P FL 165

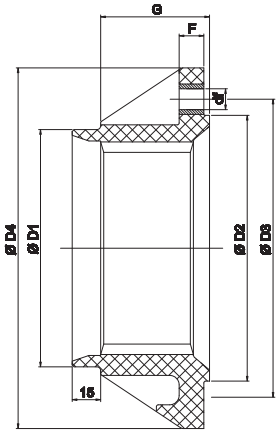

GDF 65 FL 190

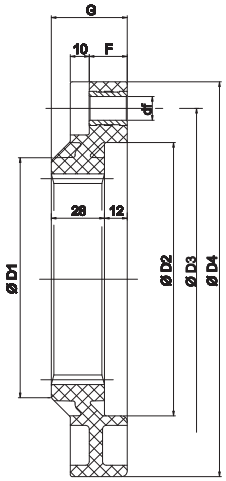

GDF 65 FL 208
GDF 65P FL 208

Special flange size	Max. bore	D1 [mm]	D2 [mm]	D3 [mm]	D4 [mm]	F [mm]	G [mm]	df x z
GDF 48 FL 125	48	80	-	100	125	27	30	11 x 3
GDF 48 FL 165	48	98	125	142	165	10	20	13 x 6
GDF 48P FL 165	48	98	125	142	165	10	20	13 x 6
GDF 65 FL 190	65	125	140	160	190	13	57	11 x 6
GDF 65 FL 208	65	125	144	180	208	20	40	18 x 8
GDF 65P FL 208	65	125	144	180	208	20	40	18 x 8

Flywheel bellhousing

The dimensions of the flywheel Bell housing plates are in accordance with SAE 617.

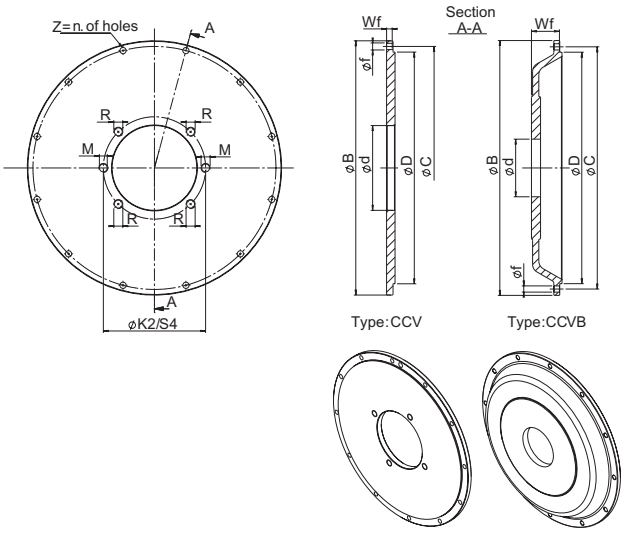

SAE - Flywheel Bellhousing							
SAE type	D [mm]	B [mm]	C [mm]	Number of holes Z	f [mm]	**CCV**	**CCVB**
						Wf	
SAE 6	266,7	308	285,8	8	11	10,5	-
SAE 5	314,32	356	333,4	8	11	10,5	25
SAE 4	361,95	403	381	12	11	10,5	35
							50
SAE 3	409,58	451	428,6	12	11	10,5	50
SAE 2	447,68	489	466,7	12	11	14	-

Order form

Flywheel bell housing

CCV 6 B/4
CCV B 6 B/4

Flywheel bellhousing

"B" type

SAE type for engine flange

SAE type of pump flange and number of pump mounting holes

Pump assembly SAE dimensions							
SAE Pump	Center bore d [mm]	Pump mounting holes					
		n. 2 holes			n. 4 holes		
		K2	M		S4	R	
AA	50,8	82,6	M8	5/16"	-	-	-
A	82,55	106,4	M10	3/8"	104,6	M10	3/8"
B	101,6	146	M12	1/2"	127	M12	1/2"
C	127	181	M16	5/8"	162	M12	1/2"
D	152,4	228,6	M16	5/8"	228,6	M16	5/8"

Technical characteristics

Size	Misalignment			Torque			Weight / Moment of inertia							Dynamic torsional rigidity +60°C dampening factor [Ψ] = 0,4 [Nm/rad]			
	Axial [mm]	Angular [°]	Radial [mm]	Nominal T_{KN} [Nm]	Max T_{Kmax} [Nm]	Reversible T_{KW} [Nm]	Hub		SAE SITEX® FL flange								
									6-1/2"	7-1/2"	8"	10"	11-1/2"	0,25 T_{KN}	0,50 T_{KN}	0,75 T_{KN}	1,00 T_{KN}
42	2	1°	0,2	240	600	120	Kg	0,68	0,39	0,455	0,565	0,8	-	33 x 10^3	78 x 10^3	110 x 10^3	130 x 10^3
							Kgm^2	0,0006	0,003	0,004	0,006	0,011	-				
48	2	1°	0,2	250	620	125	Kg	0,75	0,4	0,52	0,5	0,75	-	33 x 10^3	78 x 10^3	110 x 10^3	130 x 10^3
							Kgm^2	0,0007	0,003	0,004	0,006	0,011	-				
48 P	1	1°	0,2	310	780	155	Kg	0,85	0,4	0,52	0,5	0,75	-	38 x 10^3	88 x 10^3	125 x 10^3	148 x 10^3
							Kgm^2	0,0007	0,003	0,004	0,006	0,011	-				
65	2	1°	0,3	660	1650	330	Kg	2,4	-	-	0,8	0,93	1,08	58 x 10^3	142 x 10^3	205 x 10^3	250 x 10^3
							Kgm^2	0,005	-	-	0,009	0,015	0,023				
65 P	1	1°	0,2	800	1950	400	Kg	2,45	-	-	0,8	0,93	1,08	76 x 10^3	185 x 10^3	270 x 10^3	330 x 10^3
							Kgm^2	0,005	-	-	0,009	0,015	0,023				
80	2	1°	0,3	1300	3100	650	Kg	5,1	-	-	-	-	1,13	190 x 10^3	420 x 10^3	590 x 10^3	710 x 10^3
							Kgm^2	0,015	-	-	-	-	0,023				

SITEX® FL

Selection

For a proper sizing a safety factor k = 1,3 – 1,6 must be considered in accordance to the application. Or, the coupling nominal torque must be greater than or equal to the engine torque multiplied by k:

$$T_{KN} \geq T_N \quad k$$

T_{KN} = coupling nominal torque
T_N = engine side torque
k = safety factor selected in accordance with the use

Applications	k factor
Tandem rollers	1,6
Asphalt processing machines	1,4
Agricultural machines	1,4
Fork lift trucks	1,6
Concrete Mixer	1,3
Self-propelled cranes	1,4
Excavators	1,4
Farm tractors	1,4
Road working machines	1,4

Assembly

The versatility of the SITEX® FL couplings allows for numerous assembly options with different hub lengths giving consumers the ability to obtain the suitable dimension for every application.

1) Center the flange on the fly-wheel in correspondence to the seat and tighten the mounting screws DIN 912 – 8.8 class in accordance with the torque values shown in the table:

Screw	Ms
M 8	25 Nm
M 10	86 Nm
M 12	355 Nm

2) Center the fly-wheel cover plate in relation to the seat on the engine bellhousing. Tighten the screws.

3) Install the toothed hub onto the pump shaft. For split clamp hub, tighten in accordance with the torques shown in the table.

Coupling	Screw	Ms
42 - 48	M 10	49 Nm
65	M 12	86 Nm
80	M 16	355 Nm

4) Move the pump-hub assembly through the fly-wheel cover plate and up to the stop. Tighten the screws.

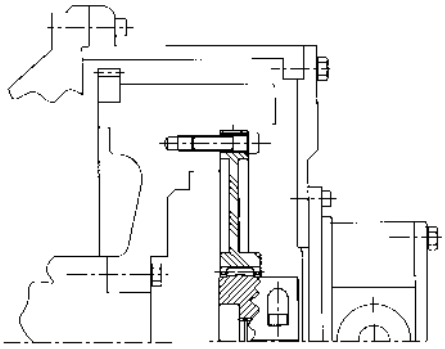

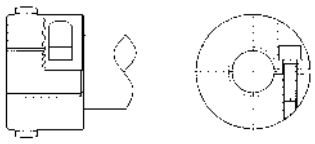

split clamp hub fastening

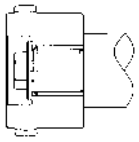

Lock nut & washer fastening

FLD execution

The SITEX® FLD couplings are designed for applications which combine with engine pulleys. These couplings allow for belt replacement without pump disassembly. The operating temperature range is from -25 °C to 100 °C.

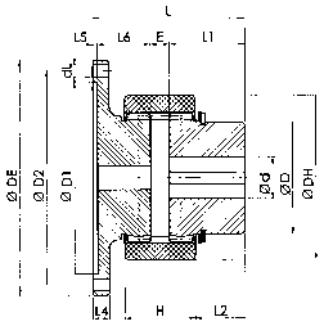

Size	T_{KN} [Nm]	T_{Kmax} [Nm]	T_{KW} [Nm]	d_{max} [mm]	L5 [mm]	L1 [mm]	L4 [mm]	L6 [mm]	E [mm]	L [mm]	H [mm]	L2 [mm]	D [mm]	DH [mm]
28 FLD	45	90	23	26	4	35,5	10	28,5	13	81	39	22,5	42	70
32 FLD	60	120	30	30	4	35,5	12	28,5	13	81	40	21,5	48	84
42 FLD	140	280	70	42	5	37,5	13	30,5	13	86	43	22,5	63	100
60 FLD	380	780	190	65	5	64	16	44	16	129	60	42	95	140
80 FLD	700	1400	350	80	6	83	20	53	20	162	69	58,5	120	175

T_{KN} = Nominal Coupling torque T_{Kmax} = Max Coupling torque T_{KW} = Max reversal torque

Splined bore hub

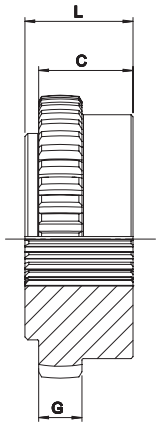

Fig.1

Splined bore hub

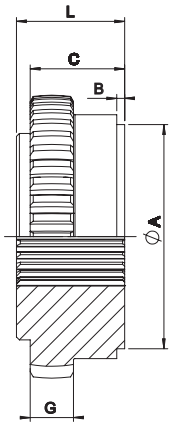

Fig.2

Splined bore hub

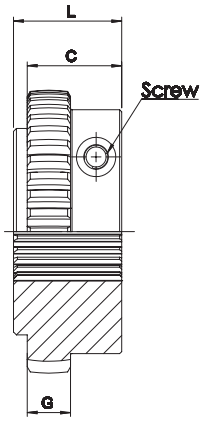

Fig.3

Clamping hub with splined bore

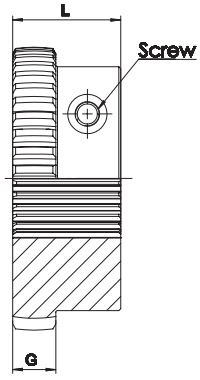

Fig.4

Clamping hub with splined bore

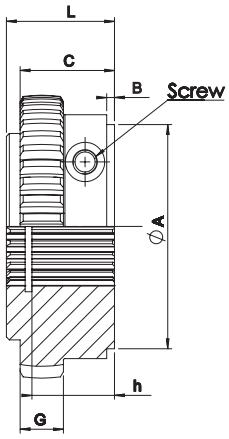

Fig.5

Clamping hub with splined bore and seeger-ring seating

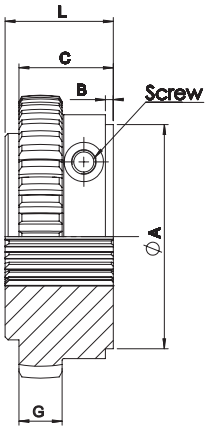

Fig.6

Clamping hub with splined bore

Hub	Splines DIN 5480									
	Fig.	Splines type	A [mm]	B [mm]	C [mm]	G [mm]	h [mm]	L [mm]	Screw	Ms [Nm]
42	1	25 x 1.25 x 18	-	-	37	13	-	42	-	-
	3	25 x 1.25 x 18	-	-	37	13	-	42	M10	49
	6	30 x 2 x 14	60	6	37	13	-	42	M10	49
48	2	30 x 2 x 14	60	6	45	13	-	50	-	-
	6	30 x 2 x 14	60	6	45	13	-	50	M10	49
65	2	35 x 2 x16	60	6	49	20	-	55	-	-
	6	35 x 2 x16	60	6	54	20	-	60	M12	86
	2	40 x 2 x 18	78	6	49	20	-	55	-	-
	6	40 x 2 x 18	78	6	54	20	-	60	M12	86
	6	45 x 2 x 21	78	6	49	20	-	55	M12	86
80	3	50 x 2 x 24	-	-	49	25	-	55	M16	295

Hub	Splines SAE J498											
	Fig.	Splines type	Tooth	DP	A [mm]	B [mm]	C [mm]	h [mm]	G [mm]	L [mm]	Screw	Ms [Nm]
42	3	PH-S 5/8”	9	16/32	-	-	37	-	13	42	M10	49
	4	PI-S 3/4”	11	16/32	-	-	-	-	13	42	M10	49
	6	PB-S 7/8”	13	16/32	60	3	37	-	13	42	M10	49
	5	PB-BS 1”	15	16/32	50	6	37	27	13	42	M10	49
48	5	PA-S 1 3/8”	21	16/32	52	7	45	45	13	50	M10	49
65	5	PA-S 1 3/8”	21	16/32	52	5	49	48	20	55	M12	86
	5	PC-S 1 1/4”	14	12/24	52	5	49	44	20	55	M12	86
80	3	PE 1 3/4”	27	16/32	-	-	49		25	55	M16	295

Ms= clamp screws tightening torque
Other splined bores and executions are available upon request.

SITEX® FL coupling selection

Motor side

Engine nominal power [kW]

Number of rotations at nominal power [rpm]

SAE dimension of the engine housing

Engine max torque [Nm]

Number of rotations [rpm]

Engine flywheel dimension

Driven side

Type of the pump shaft (specify splined type, diameter and length)

Type of the pump flange

TRASCO® ES: “0” Backlash Coupling

Contents

TRASCO® ES: “0” backlash coupling

TRASCO® ES is our zero backlash coupling designed to compensate for misalignment and vibration dampening for indexing applications. The compact design of TRASCO® ES makes it the right choice for all precise motion applications.

Description

The TRASCO® ES consists of two hubs, which are either made of high-strength aluminum (up to the 38/45 size) or steel (from size 42) that are connected with an elastic element.
The precise dimensional characteristics of TRASCO® ES are obtained through our accurate machining process.
The special compound polyurethane elastic element, developed through extensive research and laboratory testing, is made through a press-forming process which guarantees high dimensional accuracy.

The element is available in 4 different hardnesses: **80 Sh. A (blue)**, **92 Sh. A (yellow)**, **98 Sh. A (red), 64 Sh. D (green).**
Coupling performance depends on the type of element selected (see **“Technical characteristics”**).
Other element hardnesses are available upon request to meet special operating conditions, such as high temperatures and/or high torques, and for providing a high degree of vibration dampening capability. Please contact our Engineering Office for help in selecting the appropriate element hardness.

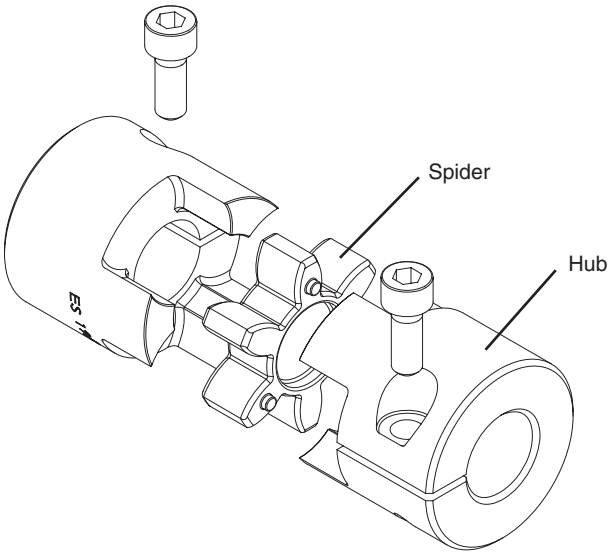

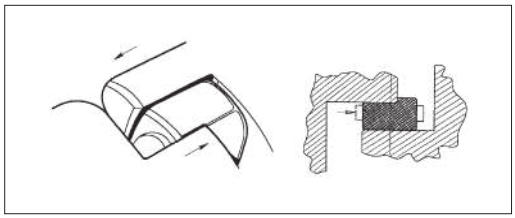

Operation

When the polyurethane element is installed in its special seats between the hubs, it becomes precompressed, thereby providing the zero backlash feature which characterizes the transmission performance of this coupling.
With zero backlash, the coupling remains torsionally rigid within the range of the precompression load, but does permit the absorption of radial, angular, and axial misalignments as well as undesired vibrations.
The significantly wide precompressed area of the flexible element keeps the contact pressure against the elastic element low. Therefore, the element teeth can be overloaded many times without undergoing any wear or taking a permanent set.

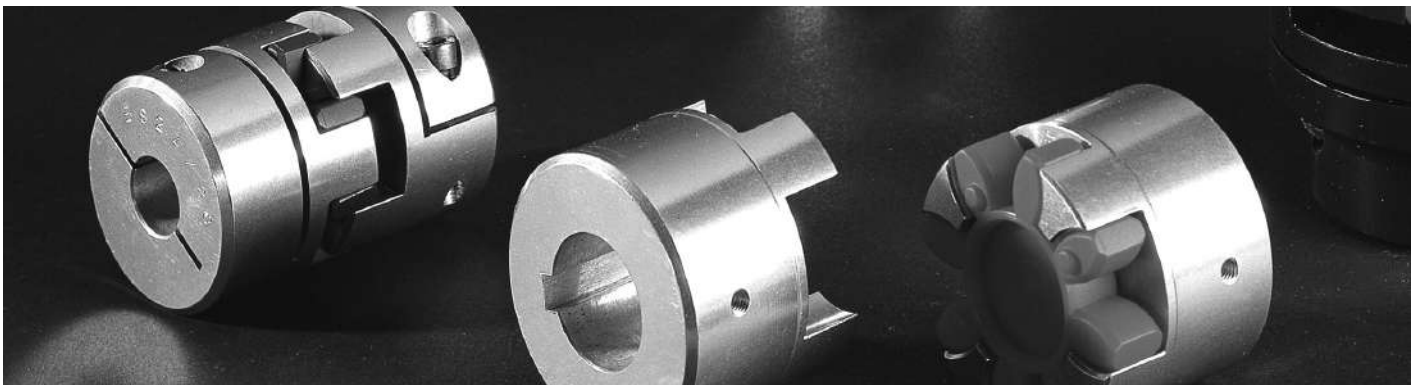

Advantages

The TRASCO® ES coupling provides the following advantages:

- **"zero-backlash" motion transmission**
- **dampening** (up to 80%) **of vibrations** from motor shaft
- **low heat and electrical conductivity**
- **easy and fast installation**
- **perfect balance** (A & AP type)
- **low moment of inertia** (due to compact design and types of materials used).

Main applications

TRASCO® ES couplings are most frequently used with:

- servomotors
- robotics
- sliding tables
- spindle controls for drilling and grinding mandrels
- ball-bearing screws

Operating Temperature Range

The operating temperature range for the TRASCO® ES depends on the type of element. For the **92 Sh. A (yellow), the range is between -40 and +90 °C, and for the 98 Sh.A (red), the range is between -30 and +90 °C.** Peak temperatures as high as 120 °C can be tolerated for brief instances.
High operating temperatures can cause the elastic element to lose a considerable amount of elasticity, thus substantially lowering the torque handling capacity.
Therefore, when selecting a coupling, the operating temperature must be carefully considered (see **"Technical characteristics"**).

ATEX Directive 2014/34/EU

It is possible to ask for specific certification for use in hazardous area according to EC standard **94/9/EC**. TRASCO® ES couplings are available with specific mounting/operating instruction manual and conformity.
For information, please contact our technical office.

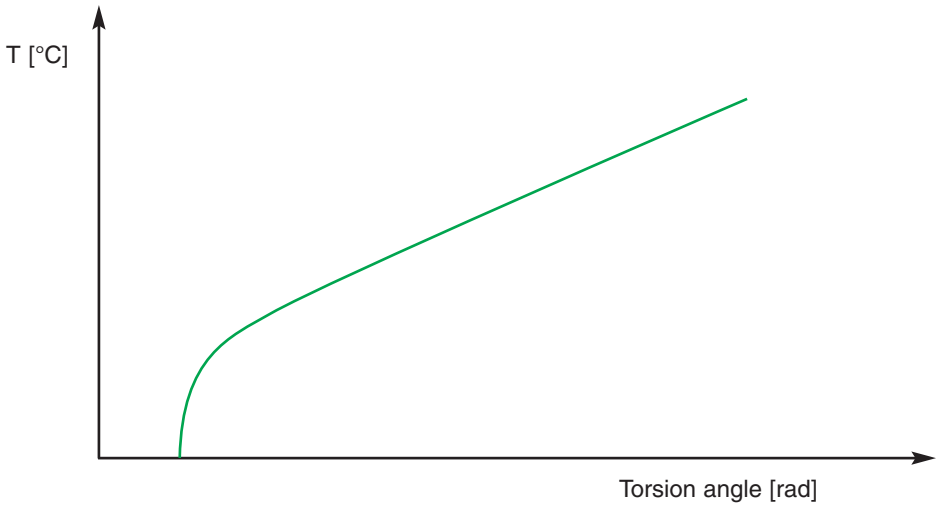

Technical characteristics

The following technical characteristics apply to all types of TRASCO® ES couplings.
When using the M, A and AP versions, check the torque values given in the table against the allowable hub transmission values for the respective versions given in the pertinent sections.
TRASCO® ES couplings can withstand axial, radial, and angular misalignment.

Even after operating for an extended period with a misalignment, there is still zero backlash because the elastic element is only stressed by pressure loads.
When an application causes a high degree of misalignment, a double flexing type coupling can be provided which avoids the formation of reaction forces.
Please contact our Engineering Office.

Size	Shore	T_{KN} [Nm]	T_{Kmax} [Nm]	C_T stat. [Nm/rad]	C_T din. [Nm/rad]	Cr [N/mm]	ΔKa [mm]	ΔKr [mm]	ΔKw [°]
7	80 Sh.A (Blue)	0,7	1,4	8	26	114	0,6	0,15	1,1
	92 Sh.A (yellow)	1,2	2,4	14	43	219	0,6	0,10	1,0
	98 Sh.A (red)	2	4	22	69	421	0,6	0,10	0,9
9	80 Sh.A (Blue)	1,8	3,6	16	52	125	0,8	0,20	1,1
	92 Sh.A (yellow)	3	6	29	95	262	0,8	0,15	1,0
	98 Sh.A (red)	5	10	55	155	518	0,8	0,10	0,9
	64 Sh.D (green)	6	12	75	225	740	0,8	0,08	0,8
12	80 Sh.A (Blue)	3	6	85	250	275	0,9	0,20	1,1
	92 Sh.A (yellow)	5	10	165	480	470	0,9	0,15	1,0
	98 Sh.A (red)	9	18	240	720	845	0,9	0,08	0,9
	64 Sh.D (green)	12	24	330	980	1200	0,9	0,05	0,8
14	80 Sh.A (Blue)	4	8	60	180	153	1,0	0,21	1,1
	92 Sh.A (yellow)	8	15	115	344	336	1,0	0,15	1,0
	98 Sh.A (red)	13	25	170	513	604	1,0	0,09	0,9
	64 Sh.D (green)	16	32	235	702	856	1,0	0,06	0,8
19/24	80 Sh.A (Blue)	5	10	370	1120	740	1,2	0,15	1,1
	92 Sh.A (yellow)	10	20	820	1920	1260	1,2	0,10	1,0
	98 Sh.A (red)	17	34	990	2350	2210	1,2	0,06	0,9
	64 Sh.D (green)	21	42	2500	3800	2970	1,2	0,04	0,8
24/28	80 Sh.A (Blue)	17	34	860	1390	840	1,4	0,18	1,1
	92 Sh.A (yellow)	35	70	2.300	5.130	1.900	1,4	0,14	1,0
	98 Sh.A (red)	60	120	3.700	8.130	2.940	1,4	0,10	0,9
	64 Sh.D (green)	75	150	5.000	11.000	3.700	1,4	0,07	0,8
28/38	80 Sh.A (Blue)	46	92	1.370	2.350	990	1,5	0,20	1,1
	92 Sh.A (yellow)	95	190	3.800	7.270	2.100	1,5	0,15	1,0
	98 Sh.A (red)	160	320	4.200	10.800	3.680	1,5	0,11	0,9
	64 Sh.D (green)	200	400	10.000	20.000	4.400	1,5	0,08	0,8
38/45	80 Sh.A (Blue)	95	190	3.000	6.100	1.400	1,8	0,22	1,1
	92 Sh.A (yellow)	190	380	5.600	12.000	2.900	1,8	0,17	1,0
	98 Sh.A (red)	325	650	8.140	21.850	5.040	1,8	0,12	0,9
	64 Sh.D (green)	405	810	25.000	40.000	6.500	1,8	0,09	0,8
42	80 Sh.A (Blue)	130	270	4.500	9.600	1.950	2,0	0,24	1,1
	92 Sh.A (yellow)	265	530	9.800	20.500	4.100	2,0	0,19	1,0
	98 Sh.A (red)	450	900	15.180	34.200	5.940	2,0	0,14	0,9
	64 Sh.D (green)	560	1.120	37.000	70.000	7.300	2,0	0,10	0,8
48	80 Sh.A (blue)	150	300	5.500	11.200	2.100	2,1	0,27	1,1
	92 Sh.A (yellow)	310	620	12.000	22.800	4.500	2,1	0,23	1,0
	98 Sh.A (red)	525	1.050	16.600	49.400	6.820	2,1	0,16	0,9
	64 Sh.D (green)	655	1.310	57.000	100.000	8.300	2,1	0,11	0,8
55	80 Sh.A (blue)	200	400	6.000	11.000	1.500	2,2	0,28	1,1
	92 Sh.A (yellow)	410	820	13.000	23.100	3.200	2,2	0,24	1,0
	98 Sh.A (red)	685	1.370	24.000	63.400	7.100	2,2	0,17	0,9
	64 Sh.D (green)	825	1.650	100.000	130.000	9.200	2,2	0,12	0,8
65	92 Sh.A (yellow)	625	1.250	23.500	35.000	6.410	2,6	0,25	1,0
	98 Sh.A (red)	900	1.800	48.000	71.500	6.620	2,6	0,18	0,9
	64 Sh.D (green)	1.040	2.080	118000	19000	8850	2,6	0,13	0,8
75	98 Sh.A (red)	1.920	3.840	79.150	150.450	8.650	3,0	0,21	0,9
	64 Sh.D (green)	2.400	4.800	182.000	315.000	12.000	3,0	0,15	0,8

All the technical data in the catalogue are valid for rotation speeds of 1500 rpm and a working temperature of 30 °C.
For linear speed over 30 m/s, dynamic balancing is recommended.

Misalignments

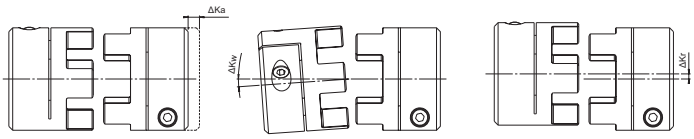

Axial Angular Radial

T_{KN}	Coupling nominal torque	Nm
T_{Kmax}	Coupling maximum torque	Nm
C_T	Torsional rigidity	Nm/rad
C_r	Radial stiffness	N/mm
ΔK_a	Maximum axial misalignment	mm
ΔK_r	Maximum radial misalignment	mm
ΔK_w	Maximum angular misalignment	°

Installation and maintenance

1. Carefully clean the shafts
2. Insert the hubs onto shafts being connected. With the M, A and AP versions, be sure to tighten the screws with the Ms torque value given in the catalogue. Be careful with the A and AP versions to tighten the screws uniformally and crosswise to the recommended torque
3. Position the element in one of the two coupling hubs
4. Fit together the two coupling halves, making sure the “s” dimension is properly observed. This must be done to insure proper elastic element function and long service life, as well as to assure the coupling is properly insulated electrically

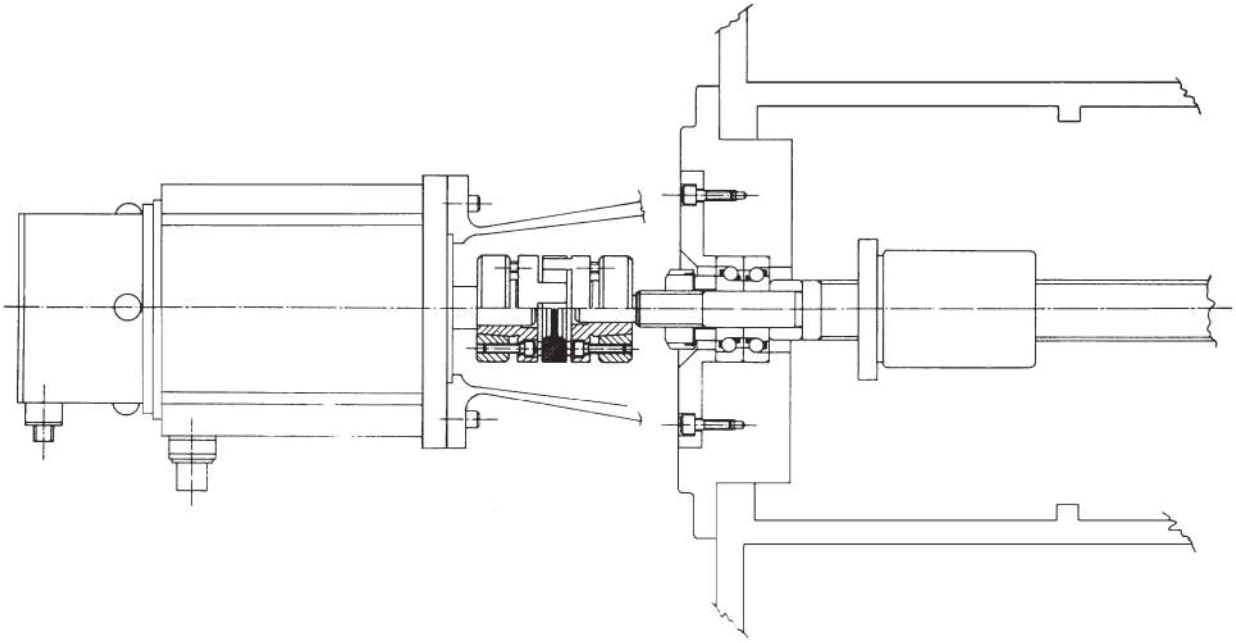

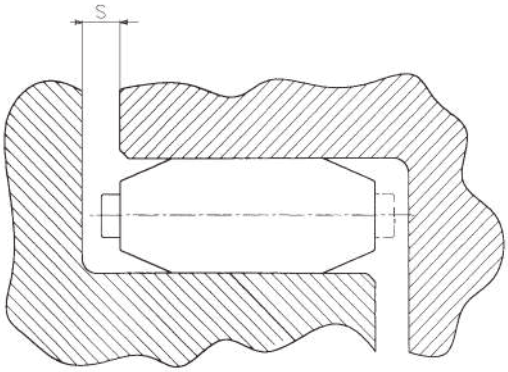

With the A and AP versions, mounting the hubs can be facilitated by lubricating the shaft contact surfaces with an oil, but **do not use a molybdenum bisulphide based oils.**
When mounting the TRASCO® ES coupling an axial thrust is generated which disappears when the mounting has been completed to avoid putting axial loads on the bearings.

Lubrication of the elastic element will reduce the amount of axial force required during installation

Note: All rotating parts must be guarded.

Selection in according to DIN 740.2

The coupling must be chosen so the applied working loads do not exceed the allowable values whatever the working conditions are.

1. Check the load with respect to the nominal torque

The nominal coupling torque must be greater than or equal to the nominal torque of the drive machine for all working temperatures.

$$T_{KN} \geq T_K \cdot S_\theta \cdot S_D$$

2. Check the load with respect to the torque peak values

The maximum coupling torque must be greater than or equal to the torque peaks that occur during operation for all working temperatures.

$$T_{Kmax} \geq T_S \cdot S_Z \cdot S_\theta + T_K \cdot S_\theta \cdot S_D$$

Motor-side peaks: $T_S = T_{AS} \cdot \frac{1}{m+1} \cdot S_A + T_L^{(1)}$

Driven-side peaks: $T_S = T_{LS} \cdot \frac{m}{m+1} \cdot S_L + T_L^{(1)}$

3. Check the load with respect to periodic torque inversions

By means of resonance

When the resonance frequency is passed rapidly below the operational interval a few torque peaks will be seen.
The generated alternating loads must be compared with the maximum torque the coupling can support.

$$T_{Kmax} \geq T_S \cdot S_Z \cdot S_\theta + T_K \cdot S_\theta \cdot S_D$$

Motor-side peaks: $T_S = T_{AI} \cdot \frac{1}{m+1} \cdot V_R + T_L^{(1)}$

Driven-side peaks: $T_S = T_{LI} \cdot \frac{m}{m+1} \cdot V_R + T_L^{(1)}$

4. Check the load with respect to nonperiodic torque inversions

To check the load with respect to nonperiodic torque inversions, the following equations must be satisfied:

$$0{,}25\ T_{KN} = T_{KW} \geq T_W \cdot S_\theta \cdot S_f \cdot S_D$$

Motor-side peaks: $T_W = T_{AI} \cdot \frac{1}{m+1} \cdot V_{fi}$

Driven-side peaks: $T_W = T_{LI} \cdot \frac{m}{m+1} \cdot V_{fi}$

(1) T_L to be added if a torque peak occurs during acceleration.

Calculation coefficients

S_θ = Temperature factor

T [°C]	−30/+30	+40	+60	+80
S_θ	1	1,2	1,4	1,8

S_v = Starting frequency factor

S/h	0-100	101-200	201-400	401-800	801-1.600
S_Z	1	1,2	1,4	1,6	1,8

S_f = Frequency factor

f in Hz	≤10	>10
S_f	1	$\sqrt{f/10}$

S_D = Torsional rigidity factor

Tooling machines	Positioning system	Speed and angular acceleration indicator
2-5	3-8	10 ≥

S_L o S_A = Shock factor

Type of impact	S_L o S_a
Light	1,5
Medium	1,8
Strong	2,2

V_{fi} = Torque-Amplification factor = $\sqrt{\dfrac{1+\left(\frac{\psi}{2\pi}\right)^2}{\left(1-\frac{n^2}{n_R^2}\right)^2+\left(\frac{\psi}{2\pi}\right)^2}}$

n_R = Resonance frequency = $\frac{30}{\pi}\sqrt{C_{Tdin}\frac{J_A+J_L}{J_A \cdot J_L}}$ $[\text{min}^{-1}]$

m = Mass factor = $\frac{J_A}{J_L}$

Example of selection

Application

Servomotor driving a recirculating ball screw on a machine tool

Nominal Torque	T_K = 10,0 Nm	Shock Type	Light
Peak Torque	T_{AS} = 22,0 Nm	Table Moment of Inertia	J_3 = 0,0038 kg·m²
Rpm	n = 3.000 1/min	Driven Shaft	dc = 20 mm h6 (without keyway)
Moment of Inertia	J_1 = 0,0058 kg·m²	Motor Shaft	dm = 24 mm h6 (without keyway)
Temperature	T = +40°C		

Selection

24/28 "A" type ES coupling with "Red" elastic element (98 Sh. A)

Standard coupling torque: T_{KN} = 60 [Nm]

Maximum torque: T_{Kmax} = 120 [Nm]

Hub Moment of Inertia: J_2 = 0,000135 [kg·m²]

Couple Transmitted by taper locking ring: $Tcal = \begin{cases} 92 \text{ [Nm] bore 20 [mm]} \\ 113 \text{ [Nm] bore 24 [mm]} \end{cases}$

Load check

$$T_{KN} = T_K \cdot S_\theta \cdot S_D = 10 \cdot 1{,}2 \cdot 4 = 48{,}0 \text{ [Nm]}$$

$$T_{KN} = 48{,}0 \text{ Nm} < T_{cal}$$

$$m = \frac{J_A}{J_L} \qquad J_A = J_1 + J_2 \qquad J_L = J_3 + J_2 \qquad m = 1{,}5$$

$$T_S = T_{AS} \cdot \frac{1}{m+1} \cdot S_A = 22{,}0 \cdot \frac{1}{1{,}5+1} \cdot 1{,}5 = 13{,}2 \text{ [Nm]}$$

$$T_{Kmax} = T_S \cdot S_Z \cdot S_\theta + T_K \cdot S_\theta \cdot S_D = 13{,}2 \cdot 1{,}6 \cdot 1{,}2 + 12{,}5 \cdot 1{,}2 \cdot 4 = 85{,}34 \text{ [Nm]}$$

$$T_{Kmax} = 85{,}34 \text{ Nm} < T_{cal}$$

T_{KN}	Coupling nominal torque	Nm
T_K	Motor-side nominal torque	Nm
T_{Kmax}	Coupling maximum torque	Nm
T_S	Motor peak torque	Nm
T_{AS}/T_{AI}	Driver-side peak torque	Nm
T_L	Acceleration delivered torque	Nm
T_{LS}/T_{LI}	Driven-side peak torque	Nm
V_R	Resonance factor	
V_{fi}	Torque amplification factor	
m	Mass factor	
J_A	Motor-side inertia	kgm²
J_L	Driven-side inertia	kgm²
Ψ	Dampening factor	

n_R	Resonance speed	min⁻¹
C_T	Torsional rigidity	Nm/rad
M_T	Transmissible torque moment	Nm
S_A	Motor-side shock factor	
S_L	Driven-side shock factor	
S_Z	Start frequency factor	
S_θ	Temperature factor	
S_D	Torsional rigidity factor	
S_f	Frequency factor	
T_W	Torque with reversal of the machine	Nm
T_{KW}	Torque with reversal transmissible by the coupling	Nm
T_{Cal}	Hub-shaft connection maximum torque	Nm

TRASCO® ES executions

FINISHED BORE HUBS EXECUTION

GESF execution

From size 7 to 9.
Hub execution with finish bores, and two setscrew.

GESF C execution

From size 14.
Hub execution with finish bore,

CLAMP HUBS EXECUTION

GESM execution

Clamping hub execution.

GESM...C execution

Clamping hub execution with double slot and keyway.

GESMC execution

Compact clamping hub execution.

GES2M execution

Split clamping hub execution for radial assembly of the coupling torque depends on bore diameter.

SHRINK DISC EXECUTION

GESA execution

Execution with locking ring. This execution is suitable for high speed and high torque. Screws mounting from spider side. Transmissible torque depends on bore diameter.

GESAP execution

Execution with locking ring with high machining accuracy: design suitable for application on spindles according to DIN 69002.

Standard type

SIT coupling hubs are available from stock with either solid hub or with finished bores of standard shaft diameters.
The setscrews of our finished bore execution are positioned 120 degrees from each other with one positioned 180 degrees from the keyway. Both the solid hub and bored hub coupling are generally available from stock for quick delivery.
Approved according to ATEX Directive.

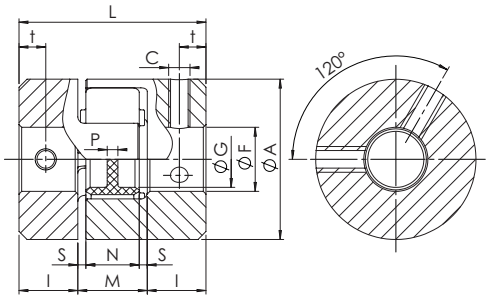

Fig. 1

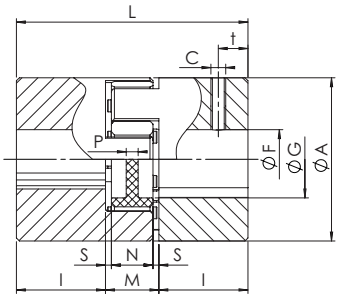

Fig. 2

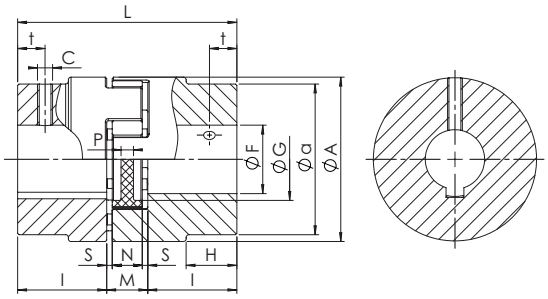

Fig. 3

Size	F min [mm]	F max [mm]	Mozzo W [kg]	Mozzo J [kgm²]	n_{max} [min⁻¹]
ALUMINUM HUBS					
7	3	7	0,003	$0,085 \times 10^{-6}$	40.000
9	4	10	0,008	$0,48 \times 10^{-6}$	28.000
12	4	12	0,015	$1,5 \times 10^{-6}$	22.000
14	4	16	0,019	$2,7 \times 10^{-6}$	19.000
19/24	6	24	0,066	$20,4 \times 10^{-6}$	14.000
24/28	8	28	0,140	$74,5 \times 10^{-6}$	10.600
28/38	10	38	0,253	$200,3 \times 10^{-6}$	8.500
38/45	12	45	0,455	$400,6 \times 10^{-6}$	7.100
STEEL HUBS					
42	14	55	2,000	2.246×10^{-6}	6.000
48	20	60	2,520	3.786×10^{-6}	5.600
55	25	70	4,100	9.986×10^{-6}	5.000
65	25	80	5,900	18.352×10^{-6}	4.600
75	30	95	6,900	27.402×10^{-6}	3.700

Bore tolerance: H7 - JS9 (DIN 6885/1) keyway

A [mm]	G [mm]	H-a [mm]	L [mm]	I [mm]	M [mm]	N [mm]	S [mm]	P [mm]	c	Ms [Nm]	t [mm]	Fig.
ALUMINUM HUBS												
14	-	-	22	7	8	6	1,0	6,0	M3	0,3	3,5	1
20	7,2	-	30	10	10	8	1,0	2,0	M3	0,3	5	1
25	8,5	-	34	11	12	10	1,0	3,0	M4	1,5	5	1
30	10,5	-	35	11	13	10	1,5	2,0	M4	1,5	5	2
40	18	-	66	25	16	12	2,0	3,5	M5	2	10	2
55	27	-	78	30	18	14	2,0	4,0	M5	2	10	2
65	30	-	90	35	20	15	2,5	5,2	M6	4	15	2
80	38	-	114	45	24	18	3,0	5,6	M8	10	15	2
STEEL HUBS												
95	46	-	126	50	26	20	3,0	5,6	M8	10	20	2
105	51	-	140	56	28	21	3,5	6,0	M8	10	25	2
120	60	-	160	65	30	22	4,0	9,0	M10	17	20	2
135	68	-	185	75	35	26	4,5	8,3	M10	17	20	2
160	80	53-135	210	85	40	30	5,0	8,3	M10	17	25	3

Order form

Hub — **GESF 24/28 F20**

- GESP: solid hub
  GESF: bore + keyway + set-screw
- Size
- F...: bore diameter

Spider — **AES 24/28 R**

- TRASCO® ES spider
- Size
- B: 80 Sh A (blue)
  G: 92 Sh A (yellow)
  R: 98 Sh A (red)
  V: 64 Sh D (green)

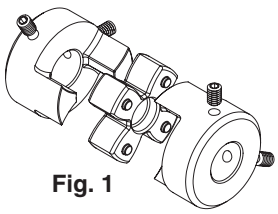

Fig. 1

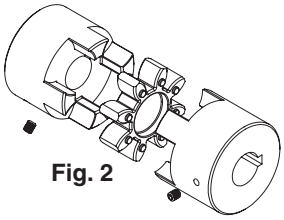

Fig. 2

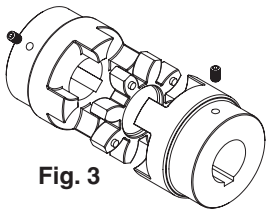

Fig. 3

M_S	Screw tightening torque	Nm
W	Weight	kg
J	Moment of inertia	kgm²
n_{max}	Maximum rpm	min⁻¹

“MC” execution with clamp hubs - compact execution

Compact version with reduced overall length. They guarantee the same performances as the normal version with reduced overall dimensions.

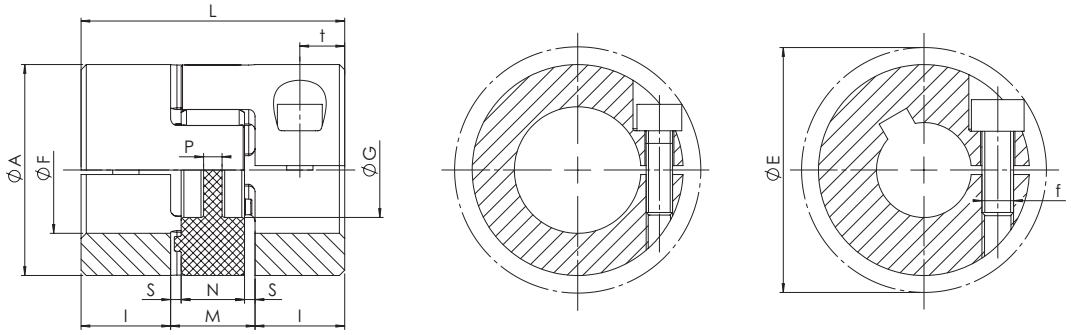

Size	F min [mm]	F max [mm]	C	Ms [Nm]	n_{max} [min^{-1}]	A [mm]	L [mm]	l [mm]	M [mm]	N [mm]	S [mm]	P [mm]	t [mm]	E [mm]
ALUMINUM HUBS														
7	3	7	M2	0,6	40.000	14	18	5	8	6	1,0	6	2,5	16,6
9	4	10	M2,5	1,0	28.000	20	24	7	10	8	1,0	2	3,5	21,3
12	4	12	M3	1,4	22.000	25	26	7	12	10	1,0	3	3,5	26,2
14	6	16(1)	M4	2,9	19.000	30	32	9,5	13	10	1,5	2	4,8	30,5
19/24	10	24(1)	M6	11,0	14.000	40	50	17	16	12	2,0	3,5	8,5	45,0(1)
24/28	10	32	M6	11,0	10.600	55	54	18	18	14	2,0	4	9,0	57,5
28/38	14	35	M8	25,0	8.500	65	62	21	20	15	2,5	5,2	10,5	69,0
38/45	19	45	M10	49,0	7.100	80	76	26	24	18	3,0	5,6	13,0	86,0

(1) Size 14 up to bore ∅ screw 12 M4 , over screw M3 . size 19/24 up to bore ∅ 20 screw M6, over screw M5 (∅ E= 46,7 mm)

Size	Recommended **M** coupling Type Hub Bore Dia. [mm] and Transmissible Torque [Nm], valid for shaft tolerances k6																									
	3	4	5	6	7	8	9	10	11	12	14	15	16	18	19	20	22	24	25	28	30	32	35	38	40	42	45
7	0,8	0,9	1,0	1,0	1,1																						
9		2,1	2,2	2,3	2,5	2,6	2,7	2,8																			
12		3,4	3,6	3,8	3,9	4,1	4,3	4,4	4,6	4,8																	
14			7,1	7,4	7,7	8,0	8,3	8,6	8,9	9,2	5,8	6,0	6,1														
19						24,4	25,1	25,8	26,5	27,1	28,5	29,2	29,9	31,2	31,9	32,6	25,4	26,3									
24								23	25	27	32	34	36	41	43	45	50	54	57	63	68	72					
28											58	62	66	75	79	83	91	100	104	116	124	133	145				
38												99	105	119	125	132	145	158	165	184	198	211	230	250	263	277	296

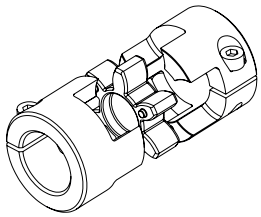

n_{max} Maximum rpm min^{-1}

“M” execution with clamp hubs

This type of coupling permits quick, positive mounting, without any shaft-hub backlash.
With the keyless coupling type, the torque applied for tightening down the screws (Ms) must be as given in the table.
The M coupling type is available with or without keyway.
Approved according to ATEX Directive.

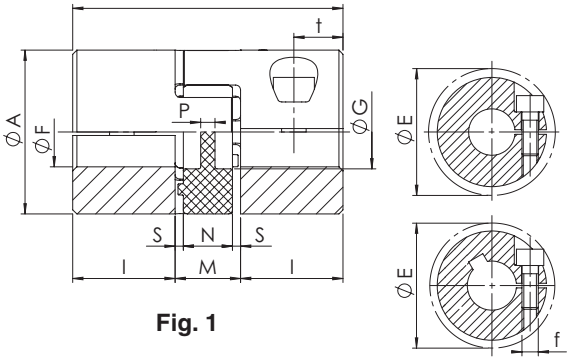

Fig. 1

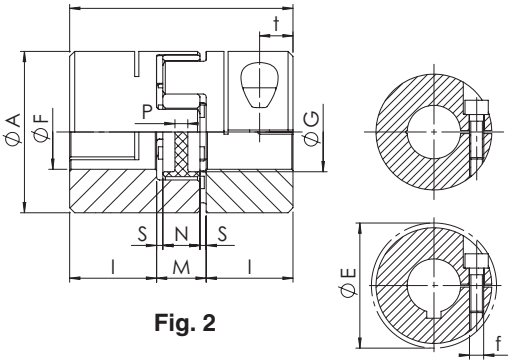

Fig. 2

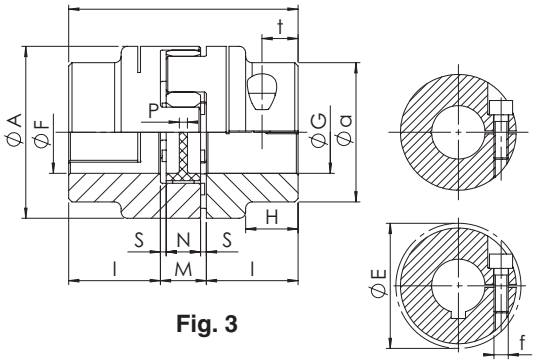

Fig. 3

Size	F min [mm]	F max [mm]	f	Ms [Nm]	Hub W [kg]	Hub J [kgm²]	nmax [min⁻¹]
ALUMINUM HUBS							
7	3	7	M2	0,35	0,003	$0,085 \times 10^{-6}$	40.000
9	4	10	M2,5	0,75	0,007	$0,42 \times 10^{-6}$	28.000
12	12	25	M3	1,4	0,015	$1,4 \times 10^{-6}$	22.000
14	6	16	M3	1,4	0,018	$2,6 \times 10^{-6}$	19.000
19/24	10	24[1]	M6	11	0,071	$18,1 \times 10^{-6}$	14.000
24/28	10	32	M6	11	0,156	$74,9 \times 10^{-6}$	10.600
28/38	14	35	M8	25	0,240	$163,9 \times 10^{-6}$	8.500
38/45	19	45	M8	25	0,440	$465,5 \times 10^{-6}$	7.100
STEEL HUBS							
42	25	50	M10	70	2,100	3.095×10^{-6}	6.000
48	25	55	M12	120	2,900	5.160×10^{-6}	5.600
55	35	70	M12	120	4,000	9.737×10^{-6}	5.000
65	40	80	M14	190	5,800	17.974×10^{-6}	4.600
75	40	80	M16	295	8,100	29.304×10^{-6}	2.950

Keyway position	A [mm]	G [mm]	H-a [mm]	L [mm]	I [mm]	M [mm]	N [mm]	S [mm]	P [mm]	t [mm]	E [mm]	Fig.
ALUMINUM HUBS												
-	14	-	-	22	7	8	6	1,0	6	4	15,0	1
-	20	7,2	-	30	10	10	8	1,0	2	5	23,4	1
180°	25	8,5	-	34	11	12	10	1,0	3	5	27	1
180°	30	10,5	-	35	11	13	10	1,5	2	5,5	32,2	1
120°	40	18	-	66	25	16	12	2,0	3,5	12	45,7[1]	1
90°	55	27	-	78	30	18	14	2,0	4	12	57,5	2
90°	65	30	-	90	35	20	15	2,5	5,2	13,5	72,6	2
90°	80	38	-	114	45	24	18	3,0	5,6	16	83,3	2
STEEL HUBS												
-	95	46	-	126	50	26	20	3,0	5,6	20	78,8	2
-	105	51	-	140	56	28	21	3,5	6	21	108,0	2
-	120	60	-	160	65	30	22	4,0	9	26	122,0	2
-	135	68	-	185	75	35	26	4,5	8,3	27,5	139,0	2
-	160	80	53-135	210	85	40	30	5,0	8,3	30	147,5	3

[1] Size 19/24 up to bore ∅ 20 screw M6, over M5 screw (∅ E= 46,7 mm)
From size 7 to 19/24: single slot execution
From size 24/28 to 65: double slot execution
Bore tolerance: F7 - JS9 (DIN 6885/1) keyway

M_S	Screw tightening torque	Nm
W	Weight	kg
J	Coupling moment of inertia	kgm^2
n_{max}	Maximum rpm	min^{-1}

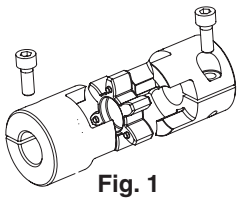

Fig. 1

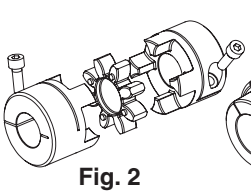

Fig. 2

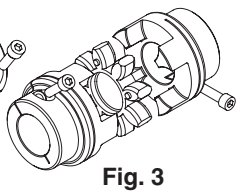

Fig. 3

Hub **GESM 48 F50**

GESM: TRASCO® ES hub

Size

F...: bore diameter
F...C: bore diameter and keyway

Spider **AES 24/28 R**

TRASCO® ES spider

Size

B: 80 Sh A (blue)
G: 92 Sh A (yellow)
R: 98 Sh A (red)
V: 64 Sh D (green)

Using hub execution **M** without keyway, the maximum transmissible torque is the minor between the clamp-hub transmissible torque and the value stated in the section **"Technical characteristics".**

Size	Recommended **M** coupling Type Hub Bore Dia. [mm] and Transmissible Torque [Nm], valid for shaft tolerances k6																																		
	3	4	5	6	7	8	9	10	11	12	14	15	16	18	19	20	22	24	25	28	30	32	35	38	40	42	45	48	50	55	60	65	70	75	80
7	0,9	1,0	1,0	1,1	1,2																														
9		2,1	2,3	2,4	2,5	2,6	2,7																												
12		4,1	4,2	4,4	4,6	4,8	5,0	5,2	5,4	5,5																									
14			5,0	5,2	5,4	5,5	5,7	5,9	6,1	6,3	6,7	6,8	7,0																						
19/24								28	29	29	31	31	32	34	34	35	30	32																	
24/28								24	27	29	34	37	39	44	46	49	54	59	61	68	73	78													
28/38											58	62	66	75	79	83	91	100	104	116	124	133	145												
38/45												62	66	75	79	83	91	100	104	116	124	133	145	158	166	174	187								
42																139	153	167	174	195	209	223	243	264	278	292	313	334	348						
48																			254	285	305	326	356	387	407	428	458	489	509	560					
55																						326	356	387	407	428	458	489	509	560	611	662	713		
65																							488	530	558	586	628	670	697	767	837	907	976	1046	1116
75																									769	808	865	923	961	1057	1154	1250	1346	1442	1538

“2M” execution with clamp hubs

Split clamping hub execution for radial assembly of the coupling torque depends on bore diameter.

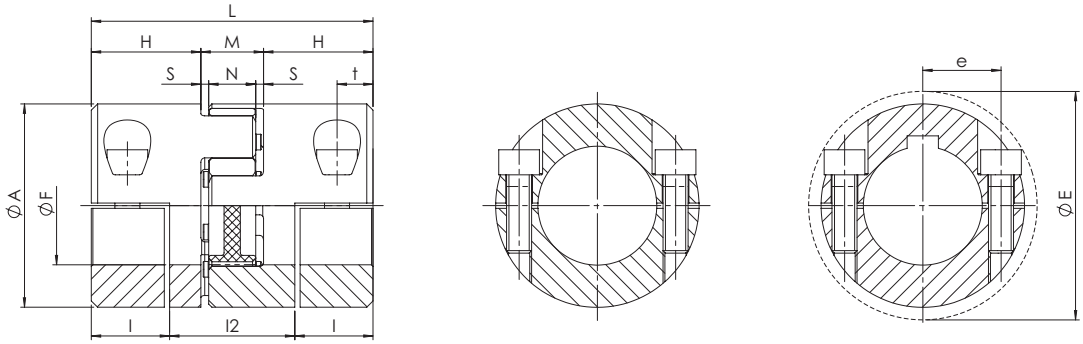

Size	F min [mm]	F max [mm]	f	Ms [Nm]	Hub W [kg]	Hub J [kgm²]	n_{max} [min⁻¹]	A [mm]	H [mm]	l [mm]	l_2 [mm]	L [mm]	M [mm]	N [mm]	S [mm]	E [mm]	t [mm]	e [mm]
ALUMINUM HUBS								**ALUMINUM HUBS**										
14	5	16	M3	1,3	0,025	$4,6 \times 10^{-6}$	12.700	30	18,5	14,5	21	50	13	10	1,5	32	7,5	11,5
19/24	8	20	M6	10	0,078	$2,0 \times 10^{-6}$	9.550	40	25	17,5	31	66	16	12	2	47	8,0	14,5
24/28	10	28	M6	10	0,160	$76,3 \times 10^{-6}$	6.950	55	30	22	34	78	18	14	2	57	10,5	20,0
28/38	14	38	M8	25	0,240	$176,3 \times 10^{-6}$	5.850	65	35	25	40	90	20	15	2,5	73	11,5	25,0
38/45	18	45	M8	25	0,470	$503,9 \times 10^{-6}$	4.750	80	45	33	48	114	24	18	3	84	15,5	30,0
42	22	50	M10	49	0,750	$1.121,7 \times 10^{-6}$	4.000	95	50	36,5	53	126	26	20	3	94	18,0	36,0
48	22	55	M12	86	1,08	$1.870,4 \times 10^{-6}$	3.600	105	56	39,5	61	140	28	21	3,5	105	18,5	36,0

Size	Recommended **M** coupling Type Hub Bore Dia. [mm] and Transmissible Torque [Nm], valid for shaft tolerances k6																											
	5	6	7	8	9	10	11	12	14	15	16	18	19	20	22	24	25	28	30	32	35	38	40	42	45	48	50	55
14	2,8	3,3	3,9	4,4	5,0	5,6	6,1	6,7	7,8	8,3	8,9																	
19/24				18	20	23	25	27	32	34	36	41	43	45														
24/28						23	25	27	32	34	36	41	43	45	50	54	57	63										
28/38									58	62	66	75	79	83	91	100	104	116	124	133	145	158						
38/45										62	66	75	79	83	91	100	104	116	124	133	145	158	166	174	187			
42														132	145	158	165	184	198	211	230	250	263	277	296	316	329	
48															212	231	241	270	289	308	337	366	385	404	433	462	481	529

n_{max}	Maximum rpm	min^{-1}

“A” type - Shrink disc execution

This type of coupling provides excellent kinetic uniformity. Furthermore, the absence of keys or set screws makes it a well-balanced coupling and greatly facilitates installation and removal. An exact radial/axial positioning is easy for those applications which require it. The absence of keyways also avoids fretting corrosion and backlash between the shaft and the hub. This is the ideal type of coupling for applications requiring precision and/or high rotational speeds.
Approved according to ATEX Directive.

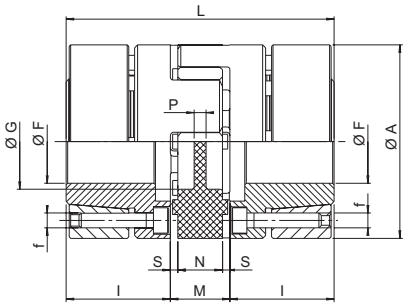

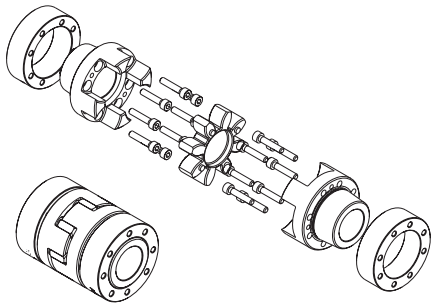

Size	F min [mm]	F max [mm]	f	Screws per locking elements	Ms [Nm]	Hub W [kg]	Hub J [kgm²]	n_{max} [min^{-1}]	A [mm]	G [mm]	L [mm]	I [mm]	M [mm]	N [mm]	S [mm]	P [mm]
ALUMINUM HUBS AND STEEL LOCKING ELEMENT									**ALUMINUM HUBS AND STEEL LOCKING ELEMENT**							
14	6	14	M3	4	1,3	0,049	7×10^{-6}	28.000	30	10,5	50	18,5	13	10	1,5	2
19/24	10	20	M4	6	2,9	0,120	30×10^{-6}	21.000	40	18	66	25	16	12	2,0	3,5
24/28	15	28	M5	4	6,0	0,280	135×10^{-6}	15.500	55	27	78	30	18	14	2,0	4
28/38	19	38	M5	8	6,0	0,450	315×10^{-6}	13.200	65	30	90	35	20	15	2,5	5,2
38/45	20	45	M6	8	10,0	0,950	960×10^{-6}	10.500	80	38	114	45	24	18	3,0	5,6
STEEL HUBS AND LOCKING ELEMENT									**STEEL HUBS AND LOCKING ELEMENT**							
42	28	50	M8	4	35,0	2,300	3.150×10^{-6}	9.000	95	46	126	50	26	20	3,0	5,6
48	35	60	M8	4	35,0	3,080	5.200×10^{-6}	8.000	105	51	140	56	28	21	3,5	6
55	35	65	M10	4	71,0	4,670	10.300×10^{-6}	6.300	120	60	160	65	30	22	4	9
65	40	70	M12	4	120,0	6,700	19.100×10^{-6}	5.600	135	68	185	75	35	26	4,5	8,3

Bore tolerance: H7

For the sizes 55 and 65 the ring changes with the bore. For further information please contact our Technical Office.

Using hub execution **A**, the shrink-disc maximum transmissible torque is the minor between the value stated in the table below and the value stated in section **“Technical characteristics”**.

Size	Recommended **A** coupling Type Hub Bore Dia. [mm] and Transmissible Torque [Nm], valid for shaft tolerances k6																									
	∅ 10	∅ 11	∅ 14	∅ 15	∅ 16	∅ 17	∅ 18	∅ 19	∅ 20	∅ 22	∅ 24	∅ 25	∅ 28	∅ 30	∅ 32	∅ 35	∅ 38	∅ 40	∅ 42	∅ 45	∅ 48	∅ 50	∅ 55	∅ 60	∅ 65	∅ 70
14	10	12	22																							
19/24	42	46	60	65	69	74	79	84	88																	
24/28				66	72	77	82	87	92	102	113	118	135													
28/38								175	185	205	225	235	266	287	308	339	373									
38/45									255	283	312	326	367	398	427	471	515	545	577	620						
42													420	460	500	563	627	670	714	790	850	880				
48																557	612	649	687	744	801	840	932	1033		
55																	986	1112	1140	1185	1284	1412	1420	1652	1680	1691
65																		1531	1580	1772	1840	1960	2049	2438	2495	2590

Order form

Hub — **GESA 48 F45**

- GESA: TRASCO® ES hub - “A” execution
- Size
- F...: bore diameter

Spider — **AES 24/28 R**

- TRASCO® ES spider
- Size
- B: blue; G: yellow; R: red; V: green

M_S	Screw tightening torque	Nm
W	Weight	kg
J	Coupling moment of inertia	kgm^2
n_{max}	Maximum rpm	min^{-1}

“AP” type - Shrink disc execution according to DIN 69002

Precision “zero-backlash” coupling designed for multi spindle devices on machine tools or controls with reduced mass, such as short center spindles, multi-centers primary spindles in work stations, or joined to high speed bearings with limited tolerance range. It is suitable for very high speeds of rotation (up to speeds of 50 m/s).

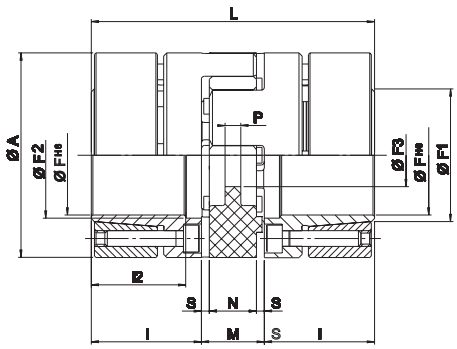

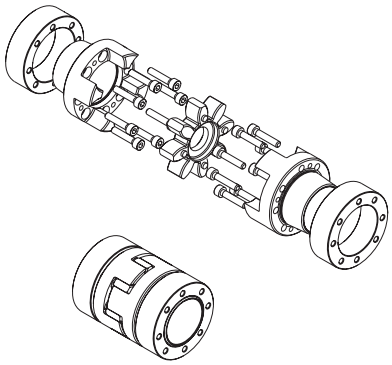

Size	F H6 [mm]	Ms [Nm]	Hub W [kg]	Hub J [kgm²]	nmax [min-1]
STEEL HUBS AND LOCKING ELEMENT					
14	14	1,89	0,080	11×10^{-6}	28.000
19/24 - 37,5	16	3,05	0,160	37×10^{-6}	21.000
19/24	19	3,05	0,190	46×10^{-6}	21.000
24/28-50	24	4,90	0,330	136×10^{-6}	15.500
24/28	25	8,50	0,440	201×10^{-6}	15.500
28/38	35	8,50	0,640	438×10^{-6}	13.200
38/45	40	14,00	1,320	1.325×10^{-6}	10.500
42	42	35,00	2,230	3.003×10^{-6}	9.000
48	45	35,00	3,090	5.043×10^{-6}	8.000
55	50	35,00	4,740	10.020×10^{-6}	6.300

A [mm]	L [mm]	l [mm]	l2 [mm]	M [mm]	N [mm]	S [mm]	P [mm]	F1 [mm]	F2 [mm]	F3 [mm]
STEEL HUBS AND LOCKING ELEMENT										
32	50	18,5	15,5	13	10	1,5	2,0	17	17	8,5
37,5	66	25	21	16	12	2,0	3,5	20	19	9,5
40	66	25	21	16	12	2,0	3,5	23	22	9,5
50	78	30	25	18	14	2,0	4,0	30	29	12,5
55	78	30	25	18	14	2,0	4,0	32	30	12,5
65	90	35	30	20	15	2,5	5,2	42	40	14,5
80	114	45	40	24	18	3,0	5,6	49	46	16,5
92	126	50	45	26	20	3,0	5,6	54	55	18,5
105	140	56	50	28	21	3,5	6,0	65	60	20,5
120	160	65	58	30	22	4,0	9,0	65	72	22,5

Bore tolerance: H6

Spindle size	TRASCO® ES “AP”	98 Sh. A TKN [Nm]	98 Sh. A TKmax [Nm]	64 sh. D TKN [Nm]	64 sh. D TKmax [Nm]
25 x 20	14	12,5	25	16	32
32 x 25	19/24 - 37,5	14	28	17	34
32 x 30	19/24	17	34	21	42
40 x 35	24/28 - 50	43	86	54	108
50 x 45	24/28	60	120	75	150
63 x 55	28/38	160	320	200	400

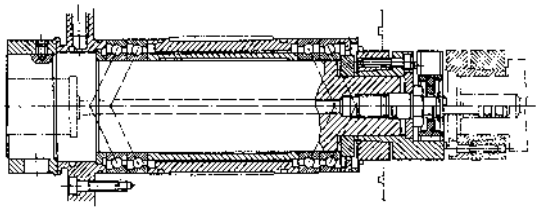

Order form

Hub — **GESAP 48 F45**

- GESAP: TRASCO® ES hub - “AP” execution
- Size
- F...: bore diameter

Spider — **AESP 24/28 R**

- TRASCO® ES spider - “AP” execution
- Size
- R: red; V: green

M_S	Screw tightening torque	Nm
W	Weight	kg
J	Coupling moment of inertia	kgm^2
n_{max}	Maximum rpm	min^{-1}

“GESS” double cardanic execution

This execution allows higher misalignments. The 2 spiders allow a high vibration dampening providing a decrease in drive noise and longer life of related components (ex. bearings).

The intermediate element is made of aluminum alloy and may be used in combination with any type of hub execution.

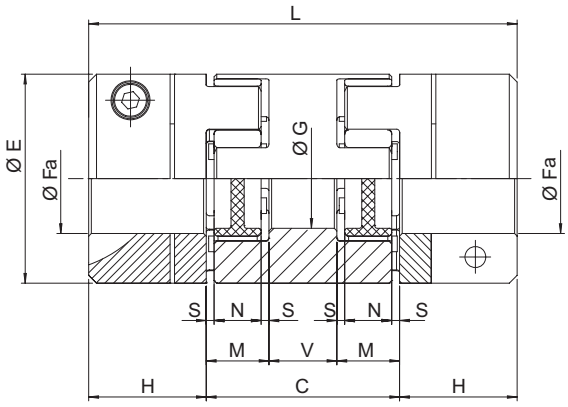

Size	Fa min [mm]	Fa max [mm]	E [mm]	A [mm]	C [mm]	H [mm]	L [mm]	V [mm]	M [mm]	S [mm]	N [mm]	G [mm]	W [kg]	J [kg m²]
ALUMINUM HUBS ALUMINUM GESS														
7	3	7	14	–	20	7	34	4	8	1	6	–	0,003	0,00000008
9	4	9	20	–	25	10	45	5	10	1	8	–	0,007	0,0000004
14	6	15	30	–	34	11	56	8	13	1,5	10	–	0,024	0,000003
19/24	10	20	40	–	42	25	92	10	16	2	12	18	0,05	0,000013
24/28	10	28	55	–	52	30	112	16	18	2	14	27	0,14	0,00006
28/38	14	35	65	–	58	35	128	18	20	2,5	15	30	0,22	0,00013
38/45	15	45	80	–	68	45	158	20	24	3	18	38	0,35	0,00035
STEEL HUBS ALUMINUM GESS														
42	20	45	95	75	74	50	174	22	26	3	20	46	0,51	0,0007
48	25	60	105	85	80	56	192	24	28	3,5	21	51	0,67	0,001
55	25	70	120	110	88	65	218	28	30	4	22	60	0,97	0,002
65	25	75	135	115	102	75	252	32	35	4,5	26	68	1,43	0,004

Order form

Spacer element **GESS 24**

GESS: spacer element

Size: 24/28

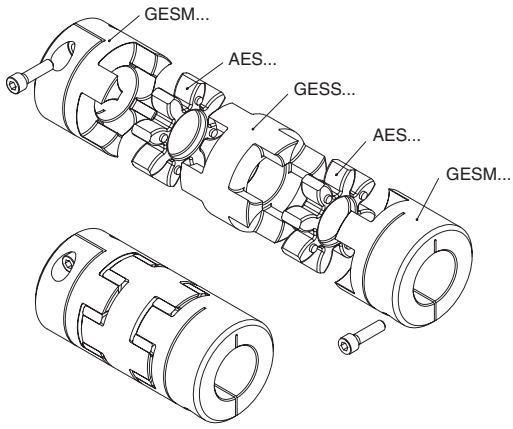

W	Weight	kg
J	Coupling moment of inertia	kgm^2

“GES LR1” execution with intermediate shaft

This zero backlash execution, allows connection to long distance shafts in applications such as lifting screw jacks, gantry robot etc. The intermediate shaft is made of steel but may be of different material for specific need.
The presence of 2 spiders, increases the dampening properties and allow high misalignments.

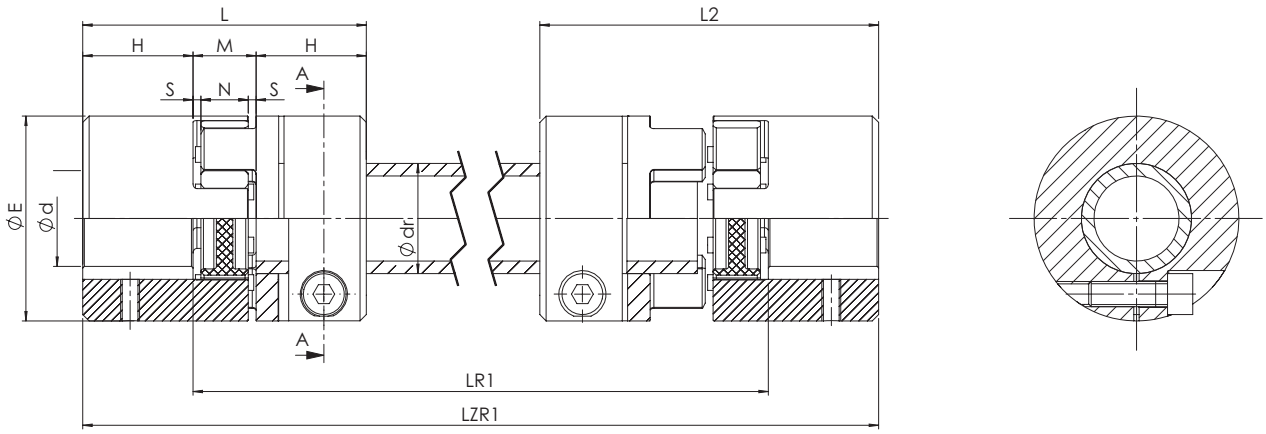

Size	External hub		Internal hub		
	Dimensions finished bores		Screws Din912-8.8 M·L	M_S [N·m]	M_T [N·m]
	dmin [mm]	dmax [mm]			
14	4	15	M3x12	1,34	6,1
19/24	6	24	M6x18	10	34
24/28	8	28	M6x20	10	45
28/38	10	38	M8x25	25	105
38/45	12	45	M8x30	25	123

E [mm]	H [mm]	L [mm]	M [mm]	N [mm]	s [mm]	L2 [mm]	LR1 [mm]	LR1 min [mm]	LZR1 [mm]	d_R x thickness [mm]
30	11	35	13	10	1,5	46,5	On request	65	LR1+22	14 x 2.0
40	25	66	16	12	2,0	80		85	LR1+50	20 x 3.0
55	30	78	18	14	2,0	94		96	LR1+60	25 x 2.5
65	35	90	20	15	2,5	107,5		111	LR1+70	35 x 4.0
80	45	114	24	18	3,0	135		126	LR1+90	40 x 4.0

Coupling configurator

Coupling code	Item	Type	Execution	Bore diameter	Order example
GESL38/45	*Hub 1*	GESP	-	-	GESF38/45F35
		GESF	-	F…	
		GESM	F-C	F…	
		GESA	-	F…	
	Spider 1	AES	B-G-R-V	-	AES38/45V
	Length LR1				LR1= 1200 mm
	Spider 2	AES	B-G-R-V	-	AES38/45V
	Hub 2	GESP	-	-	GESF38/45F35
		GESF	-	F…	
		GESM	F-C	F…	
		GESA	-	F…	

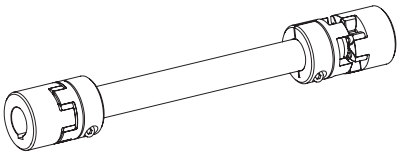

M_S	Screw tightening torque	Nm
M_T	Transmissible torque moment	Nm

“GES LR3” execution with intermediate shaft

Ideal execution for long distance shaft connections. Torque transmission is zero backlash. It is used in applications such as automatic machines, lifting machines, palletizing machines, and handling machines. Designed for length up to 4 m without bearing support (depending on rotation speed). The double slot execution, allows spider mounting and replacement without driver/driven machine displacement. All aluminum alloy for a very low inertia.

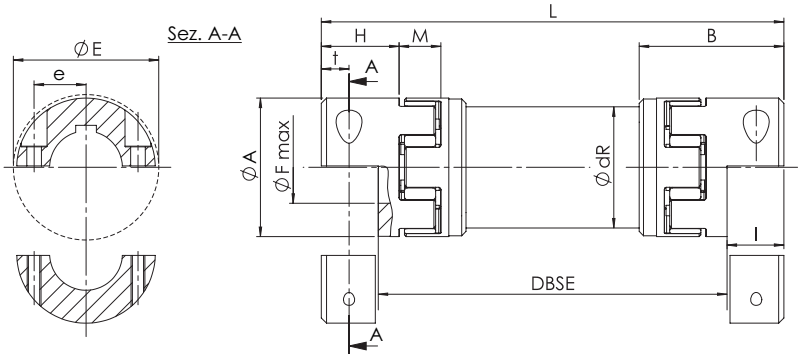

Size	Dimensions finished bores		Clamping		Moment of inertia [10^3 kgm^2] with d_{max} hub 1			Torsional rigidity
	dmin [mm]	dmax [mm]	Screws DIN 4762-8.8	M_S [Nm]	Hub J_1	Hub 2 J_2	Shaft J_3	C_T [Nm/rad]
19/24	5	16	M3	1,34	0,00406	0,00238	0,091	893
19/24	8	20	M6	10	0,02002	0,01304	0,329	3244
24/28	10	28	M6	10	0,07625	0,04481	0,0693	6632
28/38	14	38	M8	25	0,17629	0,1095	1,199	11814
38/45	18	45	M8	25	0,50385	0,2572	2,972	29290
42	22	50	M10	49	1,12166	0,5523	4,560	44930
48	22	55	M12	86	1,87044	1,1834	9,251	91158

A [mm]	H [mm]	l [mm]	B [mm]	M [mm]	DBSE [mm]	E [mm]	t [mm]	e [mm]	dR [mm]
30	18,5	14,5	36	13	DBSE + 29	32	7,5	11,5	27
40	25	17,5	49	16	DBSE + 35	47	8,0	14,5	40
55	30	22	59	18	DBSE + 44	57	10,5	20	50
65	35	25	67	20	DBSE + 50	73	11,5	25	60
80	45	33	83,5	24	DBSE + 66	84	15,5	30	70
95	50	36,5	93	26	DBSE + 73	94	18	36	80
105	56	39,5	103	28	DBSE + 79	105	18,5	36	100

Coupling configurator

Coupling code	Item	Type	Execution	Bore diameter	Order example
GESLR38/45	*Hub 1*	GES2M	F-C	F....	GES2M38/45F35
	Spider 1	AES	B-G-R-V	-	AES38/45V
	Distance between shaft DBSE				DBSE= 1200 mm
	Spider 2	AES	B-G-R-V	-	AES38/45V
	Hub 2	GES2M	F-C	F....	GESM38/45F35

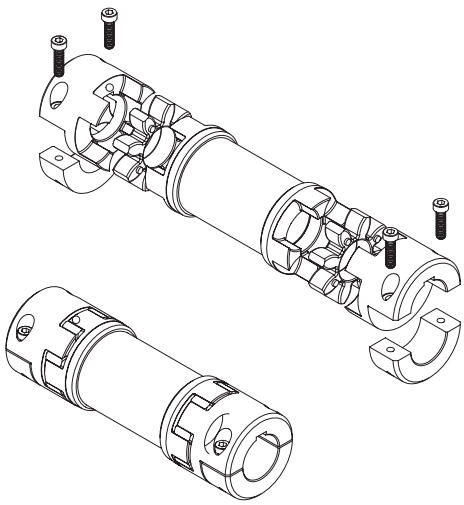

M_S	Screw tightening torque	Nm
J	Coupling moment of inertia	kgm^2
C_T	Torsional rigidity	Nm/rad

Size	Bores and torques for friction with hub without keyway [Nm]																											
	5	6	7	8	9	10	11	12	14	15	16	18	19	20	22	24	25	28	30	32	35	38	40	42	45	48	50	55
14	2,8	3,3	3,9	4,4	5,0	5,6	6,1	6,7	7,8	8,3	8,9																	
19/24				18	20	23	25	27	32	34	36	41	43	45														
24/28						23	25	27	32	34	36	41	43	45	50	54	57	63										
28/38									58	62	66	75	79	83	91	100	104	116	124	133	145	158						
38/45										62	66	75	79	83	91	100	104	116	124	133	145	158	166	174	187			
42														132	145	158	165	184	198	211	230	250	263	277	296	316	329	
48															212	231	241	270	289	308	337	366	385	404	433	462	481	529

Technical data for intermediate shaft couplings (GES LR1 - GES LR3)

Size	Misalignment	
	Assial ΔK_a [mm]	Angular ΔK_w [°]
14	1,0	0,9
19/24	1,2	0,9
24/28	1,4	0,9
28/38	1,5	0,9
38/45	1,8	0,9

Angular misalignment = 0,9° per spider

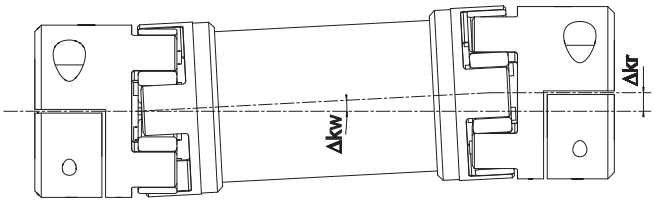

Radial misalignment

$$\Delta Kr = (L_z - 2 \cdot H - M) \cdot \tan(\Delta Kw) \quad [mm]$$

$$C_{Tot} = \frac{1}{2 \cdot \frac{1}{C_{T\,spider}} + \frac{L_{intermediate\ shaft}}{C_{T\,intermediate\ shaft}}} \quad [Nm/rad]$$

$$L_{intermediate\ shaft} = \frac{L_{zw} - 2 \cdot L}{1000} \quad [mm]$$

with L_{zw} = total coupling length

Selection diagram GES LR3 coupling

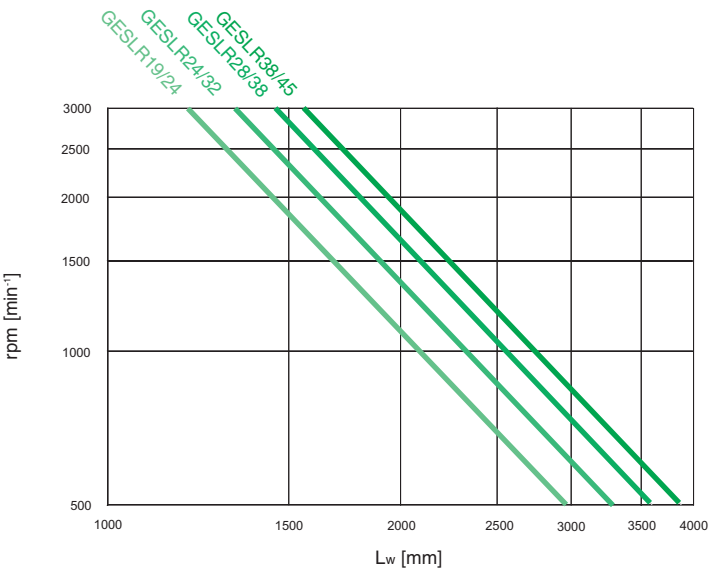

SERVOPLUS® Couplings

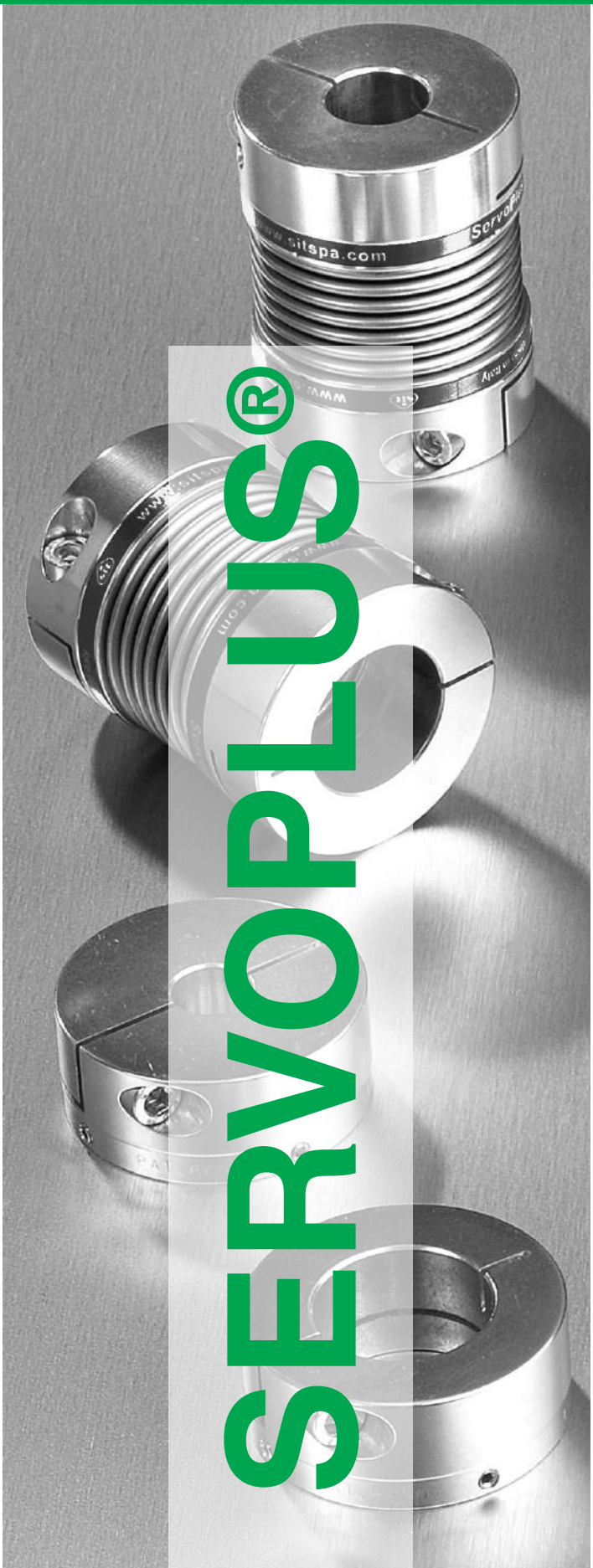

Contents

SERVOPLUS® couplings

Description

SERVOPLUS® bellows couplings are the perfect coupling in all servo motor applications where high torsional rigidity, truly backlash free torque transmission, low inertia, and superior reliability are required. The innovative modular system allows quick delivery and competitive cost advantage.

SERVOPLUS® couplings feature:

- backlash free for highest torque transmission precision
- low moment of inertia
- excellent dynamic characteristics for superior drives at high speed and torque inversions
- allow for axial, radial and angular misalignment
- easy mounting
- high torsional rigidity
- wear and maintenance free
- working temperature up to 300 °C
- innovative modular execution
- material: aluminum hub, bellow in stainless steel

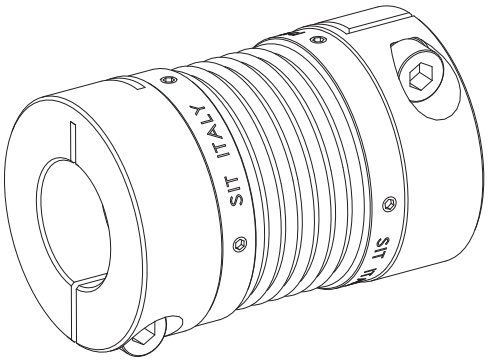

PAT. APPL. FILED

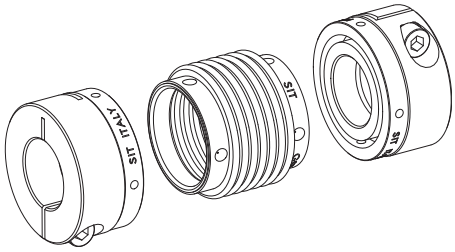

SERVOPLUS® high tech bellows couplings

The innovative modular system allows competitive costs and very quick delivery for any shaft combination. Additional benefits include bellows replacement without moving shaft.

Standard execution

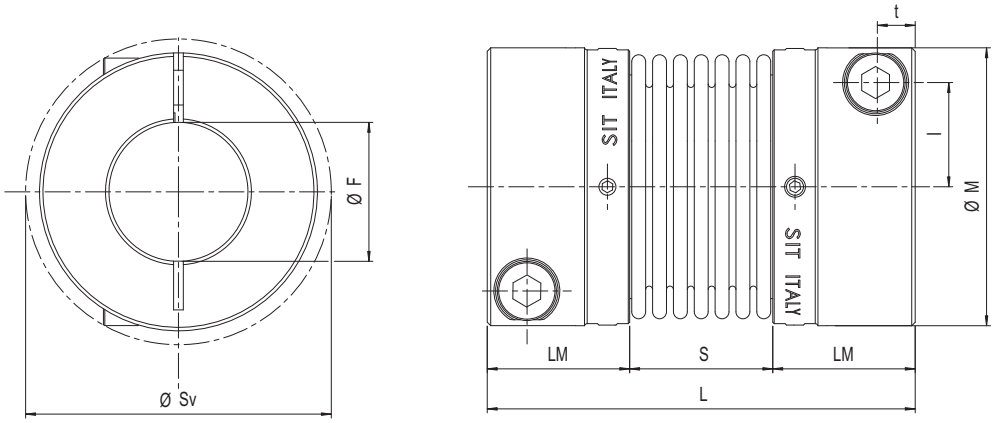

Size	Dimensions[mm]								Screws				Socket set screws		Technical data									
	Pilot bore	F		M	S_V	L_M	S	L	Type	t	l	M_S [Nm]	Type	M_S [Nm]	T_{KN} [Nm]	n_{max} [min^{-1}]	Moment of inertia [$x10^{-6}$ Kgm^2]	Torsional rigidity C_T [Nm/rad]	Axial spring stiffness [N/mm]	Radial spring stiffness [N/mm]	Misalignments			W*
		min	max																		Δka	Δkr	Δkw	[kg]
16	4,5	5	16	34	36	17	16,5	50,5	M4	4,5	12	2,9	M3	0,8	5	14000	14	3050	29	92	±0.5	0,2	1,5	0,082
20	7,5	8	20	40	44	20,5	21	62	M5	5,5	15	6	M3	0,8	15	11900	34	6600	42	126	±0.6	0,2	1,5	0,135
30	9,5	10	30	55	58	22,5	27	72	M6	6,5	20	10	M4	2	35	8700	140	14800	65	155	±0.8	0,25	2	0,289
38	13,5	14	38	65	73	26	32	84	M8	8	25	25	M4	2	65	7300	310	24900	72	212	±0.8	0,25	2	0,438
45	13,5	14	45	83	89	31	41	103	M10	9,5	30	49	M5	3,8	150	5800	1056	64000	88	492	±1,0	0,3	2	0,924

*= with max bore
Bore tolerance F7

SERVOPLUS® coupling																									
Size	Bore range and dampening hub transmissible torque [Nm]																								
	5	**6**	**7**	**8**	**9**	**10**	**11**	**12**	**14**	**15**	**16**	**18**	**19**	**20**	**24**	**25**	**28**	**30**	**32**	**35**	**38**	**40**	**42**	**45**
16	4,9	5,9	6,9	7,8	8,8	9,8	10,8	11,8	13,7	14,7	15,7													
20				12,8	14,4	16	17,6	19,2	22,3	23,9	25,5	28,7	30,3	31,9										
30							24,9	27,1	31,7	33,9	36,2	40,7	43	45,2	54,3	56,5	63,3	67,9						
38												74,6	78,8	82,9	99,5	104	116	124	133	145	158			
45														132	158	165	184	198	211	231	250	263	277	296

Additional hub executions available upon request:

- **taper bore for taper bushings**
- **conical bore for FANUC motors**

Order form

Hub and Bellows **GSP 30 MF 20**

GSP: SERVOPLUS® coupling

Size

M: hub with pilot bore
S: bellows
MF: hub with finished bore

Bore diameter in mm (only in case of hub with finished bore)

M_S	Screw tightening torque	Nm
T_{KN}	Coupling nominal torque	Nm
n_{max}	Maximum rpm	min^{-1}
C_T	Torsional rigidity	Nm/rad
ΔK_a	Maximum axial misalignment	mm
ΔK_r	Maximum radial misalignment	mm
ΔK_w	Maximum angular misalignment	°
W	Weight	kg

To configure a complete coupling select two hubs with the requested pilot bore/finish bore and one bellows.

Coupling selection

Verify the torque to be transmitted
The torque transmissible by the coupling T_{KN} must always be higher than the maximum torque applied to the driver and driven shaft.

Being:

T_{AS} = peak torque of motor side (Nm)
T_{LS} = peak torque of driven side (Nm)
k = service factor

$T_{KN} \geq k \cdot T_{AS/LS}$

Verify acceleration torque
Ts = acceleration torque (driver or driven side)
The nominal torque must be higher than the acceleration torque.

$T_{KN} > T_S \cdot k$

T_s $= T_{AS} \cdot m_A$
T_s $= T_{LS} \cdot m_L$

With: $m_A = \frac{J_A}{J_A + J_L}$ $m_L = \frac{J_L}{J_A + J_L}$

k = 1,5 with uniform load
k = 2 with non-uniform load
k = 2,5 - 4 with peak or impact load

For drives in machine tools k = 1,5 - 2

For applications with extreme precision requirements it could be important to verify the transmission error which is calculated as follows:

$$\beta = \frac{180 \cdot T_{AS}}{\pi \cdot C_T} \; [°]$$

With C_T = torsional stiffness of the coupling [Nm/rad]

Verify shaft diameter
After having selected the coupling verify the required shaft diameters are compatible with the selected coupling size (F_{min}/F_{max}).

Verify misalignment
Misalignment in the application must be compatible with the allowable misalignment of the coupling. It must be considered that the maximum values of misalignment of the coupling cannot be reached simultaneously.
Given the values of misalignment of the application and converted in percentage with respect to the corresponding maximum values of the coupling, the percentage sum must not exceed 100%.

With: $$\frac{\Delta k_{aM}}{\Delta k_a} \cdot 100\% + \frac{\Delta k_{rM}}{\Delta k_r} \cdot 100\% + \frac{\Delta k_{wM}}{\Delta k_w} \cdot 100\% < 100\%$$

- **$\Delta k_a M$, $\Delta k_r M$, $\Delta k_w M$** respectively axial, radial, and angular misalignment of the machine

- **Δk_a, Δk_r, Δk_w** respectively axial, radial, and angular misalignment which the coupling can bear

- **axial misalignment:** usually due to temperature variation
- **angular misalignment:** values up to 2° are acceptable
- **radial misalignment:** pay close attention not to exceed maximum radial misalignment. It could bring to bellows distortion.

Verify hub transmissible torque
It is important to verify the torque required in the drive is compatible with the transmissible load of the hub-shaft connection. It is possible to deliver couplings with different clamping systems in case a special application is needed. Also it is possible to deliver couplings with minimum bore smaller than indicated in catalogue. In such a case, the hub shaft connection transmissible torque will be lower.

Technical features

Long lasting
SERVOPLUS® couplings are designed for an infinite number of cycles when the maximum misalignment values and peak torque are respected.

Peak torque
SERVOPLUS® couplings allow for short periods a peak torque equal to the 1,5 time the nominal torque.
The hub shaft connection must be correctly dimensioned.

Bearing load
Due to flexibility in handling axial, angular and radial misalignment, SERVOPLUS® couplings allow reduced bearing load which reduces maintenance cost.

Working temperature
SERVOPLUS® couplings may be used up to 300° C without limitation.

Maintenance and wear
SERVOPLUS® couplings are wear and maintenance free.

Mounting instructions

SERVOPLUS® couplings are delivered with finished bore and ready for installation.
- carefully clean the contact surfaces
- position the coupling on the shafts ends and carefully tighten the radial clamping screws to the indicated torque T_A

Dismounting
- loosen radial screws
- pull apart the drive and remove the coupling

The special design of the SERVOPLUS® coupling allows the removal of the coupling or the bellows replacement without pulling apart the drive.
- loosen the socket screws
- loosen the radial clamping screws
- move the clamping hubs on the shafts
- remove the clamping hubs

Shaft requirements for a safe torque transmission are:

- tolerance h6
- roughness R_{tmax} 16µ

Note
It is recommended to pay careful attention during the mounting and dismounting operation. Damaging the bellows may render coupling unusable.

Safety norms

All rotating parts must be protected against any possibility of contact with people.
Protection must be designed so that even in case of coupling failure, personnel and equipment is protected.

SERVOMATE® Disc couplings

SERVOMATE®

Contents

SERVOMATE® disc couplings

SERVOMATE® disc couplings have been specially designed for servomotor applications.
The aluminium hubs and the compact design provide low mass moment of inertia resulting in a reliable and maintenance free coupling for high speeds. The double disk pack execution has been designed for applications with radial misalignment.

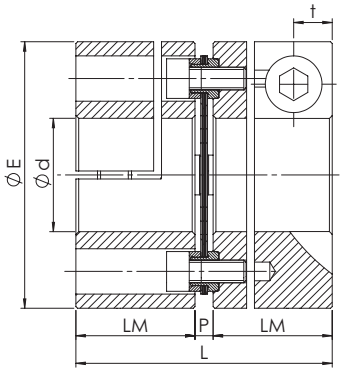

GSM

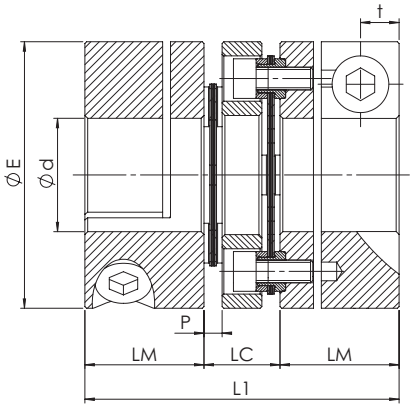

GSMC

Size	Dimensionsi [mm]								Viti		Weights and moments of inertia				T_{KN} [Nm]	T_{Kmax} [Nm]	Torsional ridigity CT [Nm/rad]		Max. speed [rpm]
											GSM		GSMC						
	d_{max}	E	LC	LM	L	L1	P	t	Tipo	M_s [Nm]	W* [Kg]	J* [Kg · m²]	W* [Kg]	J* [Kg · m²]			GSM	GSMC	
15	20	47	13	21	45	55	3	6,8	M6	10	0,16	$52 \cdot 10^{-6}$	0,20	$63 \cdot 10^{-6}$	20	40	12.000	6.000	16.000
20	25	59	19	24	52	67	4	6,5	M6	10	0,30	$149 \cdot 10^{-6}$	0,40	$194 \cdot 10^{-6}$	30	60	30.000	15.000	12.000
25	35	70	24	32	69	88	5	9,0	M8	25	0,53	$384 \cdot 10^{-6}$	0,66	$492 \cdot 10^{-6}$	60	120	60.000	30.000	10.000

*= with max bore

Size	Misalignment **GSM**			Misalignment **GSMC**		
	Radial [mm]	Axial [mm]	Angular [°]	Radial [mm]	Axial [mm]	Angular [°]
15	-	0,5	1	0,16	1,0	1
20	-	0,6	1	0,25	1,2	1
25	-	0,8	1	0,30	1,6	1

Size	Trasmissible torque [Nm] related to shaft diameter [mm]														
	Ø10	**Ø11**	**Ø12**	**Ø14**	**Ø15**	**Ø16**	**Ø19**	**Ø20**	**Ø22**	**Ø24**	**Ø25**	**Ø28**	**Ø30**	**Ø32**	**Ø35**
15	20	22	24	28	30	32	38	40	-	-	-	-	-	-	-
20	-	-	24	28	30	32	38	40	44	48	50	-	-	-	-
25	-	-	-	-	55	59	70	73	81	88	92	103	110	117	128

Order form

Coupling **GSM 020**

1 disc pack execution: GSM
2 disc packs + spacer execution: GSMC

Size

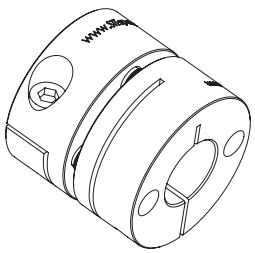

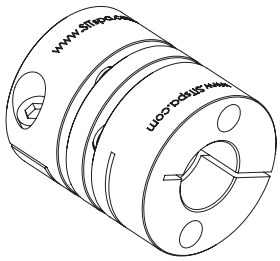

SAFEMAX® Zero Backlash Torque Limiters

Contents

SAFEMAX® Zero Backlash Torque Limiters “GLS/SG/N”

In industrial applications, the increase of, automation in the manufacturing processes is becoming a strict requirement; performances are constantly improving Ever the increase of precision utilizing servo systems results in the increase of higher speeds.
Moreover, in order to improve the production capacity it is also important the increase of stiffness of the systems thus the increase ofthe resistance to global dynamic loads.
The torque overload generated by human error, mechanical malfunction or other causes is, however, unpredictable and if not intercepted can damage to the machine and, consequently, cause downtimes which can be long and, therefore, expensive.
SAFEMAX® torque limiters prevent these problems from happening through instant disengagement of the motor side from the driven side in case of torque overload, thus eliminating the risk of expensive downtimes. In addition, our torque limiters, being torsionally rigid and backlash free, allow a rapid and accurate resumption of machine operations once the cause of the overload has been eliminated.

Features

- Backlash-free torque transmission
- Low moment of inertia
- Compact design
- Maintenance-free
- Disengagement within 1-3 milliseconds
- Easy and safe adjustment of the torque
- Re-engagement to 360 ° or in phase

Applications

- Machine tools
- Packaging machines
- Printing machines
- Textile Machinery
- Industrial Robots
- Cartoning machines
- Woodworking machines
- Automatic equipment

SIT torque limiters are available with regressive springs.
When an overload occurs, there is an immediate disengagement of the torque limiter within a few milliseconds, saving the machine from possible damage.
When the overload ends, the torque limiter re-engages after 360° or in optional preset phases.

Graph of spring characteristic curve

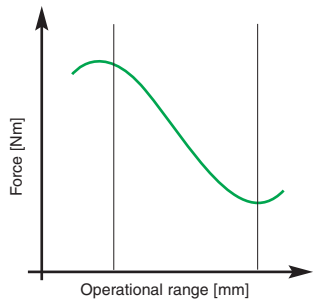

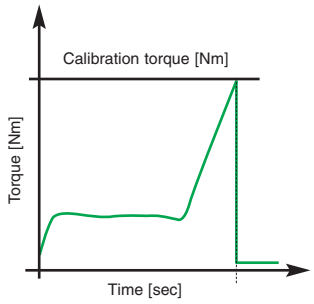

It is possible to govern the torque by the adjusting nut. Unless specifically requested, SIT limiters are designed to operate at 75% of the maximum transmissible torque. In order to allow different settings, there are reference markings on nut and hub. Moreover, there are the markings of the minimum and maximum torque of the limiter and an indication of the direction of rotation of the nut to increase and decrease the torque of disengagement. Turning the nut clockwise the disengagement torque decreases, turning counter anticlockwise it increases.

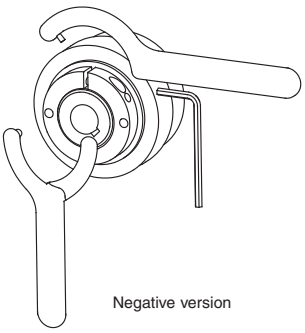

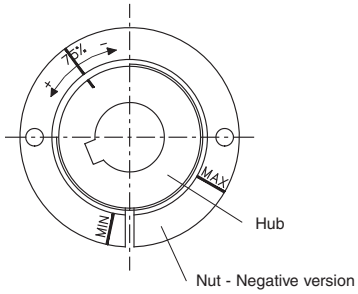

Characteristics

Design	Description	Characteristics	Assembly example
SAFEMAX - Torque limiters 	For direct mounting on timing pulley or power transmission component. Available designs: • With locking device shaft connection • With bore and keyway shaft connection On request also available in stainless steel.	Transmittable torque range: from 0.7 to 720 Nm Sizes: from 12 to 50	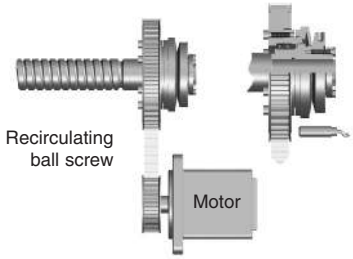 Direct mounting on timing pulley or sprocket
SAFEMAX - Torque limiters with TRASCO® ES coupling 	For connection of two shafts in combination with TRASCO® ES zero backlash coupling. Compensates for axial, radial and angular misalignment and absorb vibrations. Available designs: • Bore and keyway both sides • Locking device - clamping hub • Locking device - shrink disc On request also available in stainless steel.	Transmittable torque range: from 0.7 to 720 Nm Sizes: from 12 to 50	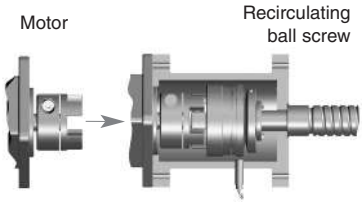 Mounting with TRASCO® ES coupling with clamping hub
SAFEMAX - Torque limiters with SERVOPLUS® coupling 	For connection of two shafts in combination with SERVOPLUS® torsionally rigid bellows coupling. Compensates for axial, radial and angular misalignment. Available designs: • Bore and keyway - clamping hub • Locking device - clamping hub On request also available in stainless steel.	Transmittable torque range: from 0.7 to 200 Nm Sizes: from 12 to 35	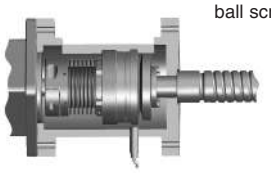 Mounting with SERVOPLUS® GSP coupling with clamping hub
SAFEMAX - Torque limiters with SERVOMATE® coupling 	For connection of two shafts in combination with SERVOMATE® torsionally rigid coupling. Available designs: • Bore and keyway - clamping hub • Locking device - clamping hub On request also available in stainless steel.	Transmittable torque range: from 0.7 to 200 Nm Sizes: from 15 to 25	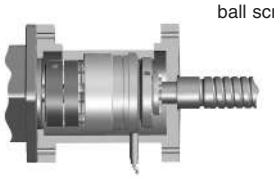 Mounting with SERVOMATE® GSM coupling with clamping hub

Label code

www.sitspa.com SAFEMAX® SPGLSNA35/E-4 150Nm N13

Type: SPGLSN

Execution:
- = Torque limiter
A = with TRASCO ES Coupling
S = with SERVOPLUS Coupling
M = with SERVOMATE Coupling

Size

Re-engagement:
... = every 360°
/E = in equidistant phase

Number of springs

Torque

Production code

SAFEMAX® - Torque limiters “GLS/SG/N”

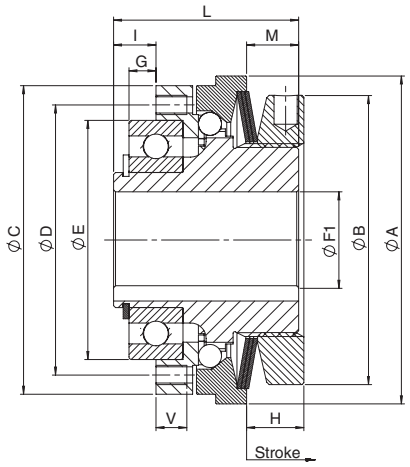

Bore and keyway execution

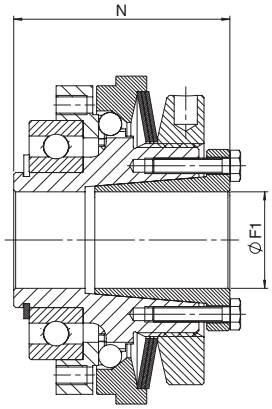

Locking device execution

Torque limiter size	Dimensions											
	F1 max [mm]	A [mm]	B [mm]	C [mm]	D [mm]	E [mm]	G [mm]	I [mm]	L [mm]	M [mm]	N [mm]	V [mm]
12	12	44	38	40	35	30	2	4,5	24	7	28,5	5
17	17	50	42	47	42	37	2	5	29	8,5	34,5	5
20	20	70	62	65	56	47	4	8	40	12	47	6
25	25	85	75	80	71	62	7	11	48	13,5	56	7
35	35*	100	82	95	85	75	9	14	59	16	67	9
42	42	115	97	110	100	90	8	16	64	17	73	10
50	50	135	117	130	116	100	6,5	18	75	20,5	86	11

*F_1 : maximum diameter for finished bore with reduced keyway according to UNI 7510. Bore tolerance H7.

	Size			12	17	20	25	35	42	50
Torque limiter	Limit torques for overload		[Nm]	0,8 - 7	3 - 23	5 - 50	9 - 100	20 - 200	35 - 415	75 - 720
	Maximum speed		[rpm]	4000	4000	4000	3000	2500	2000	1200
	Thrust washer stroke on overload		[mm]	0,8	1,0	1,1	1,3	1,5	2,0	2,2
Mass moments of inertia	Nut side	Bore and keyway	[$x10^{-6}$ kgm^2]	20	40	270	680	1510	2620	6330
		Locking device	[$x10^{-6}$ kgm^2]	20	40	280	710	1580	2820	6820
	Pressure flange side		[$x10^{-6}$ kgm^2]	9	15	80	290	680	1290	3150
Weight	Bore and keyway		[kg]	0,200	0,400	0,900	1,500	2,800	3,700	6,700
	Locking device		[kg]	0,200	0,400	0,900	1,600	3,000	4,100	7,300
Screws	Nut side	N° and type	-	6 x M3	6 x M3	8 x M4	8 x M5	8 x M6	8 x M6	8 x M8
		Tightening torque	[Nm]	1,5	1,5	3,0	5,0	7,5	7,5	14,0
Springs	Torque transmissible according to the set of springs [Nm]	1N	)	0,8 - 2,5	3 - 7,5	5 - 14	9 - 28	20 - 45	35 - 100	75 - 190
		2N	))	2,4 - 4,5	5 - 15	12 - 28	18 - 60	42 - 95	75 - 200	140 - 345
		3N	)))	3,5 - 7	8,5 - 23	24 - 50	40 - 100	-	-	-
		4N	))))	-	-	-	-	85 - 200	195 - 415	245 - 720

Note:
G: installation tolerance + 0,1.
The weights refer to the torque limiter with pilot bore.
Inertias refer to the torque limiter with maximum bore.

SAFEMAX® - Torque limiters “GLS/SG/N” with TRASCO® ES

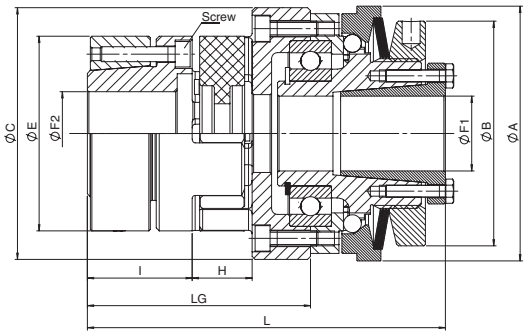

Locking device execution / GESA

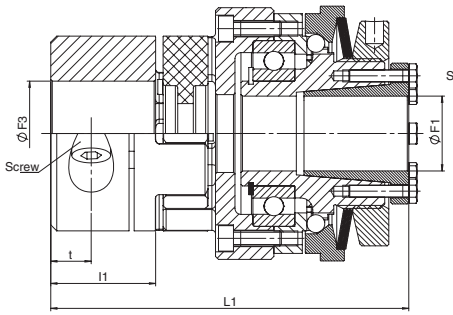

Locking device execution / GESM

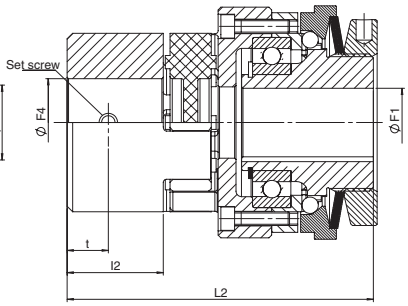

Bore and keyway execution / GESF

Torque limiter size	TRASCO® ES size	Dimensions											
		F_1 max [mm]	F_2 max [mm]	F_3 max [mm]	F_4 max [mm]	A [mm]	B [mm]	C [mm]	E [mm]	I [mm]	H [mm]	L_g [mm]	L [mm]
12	14	12	14	15	15	44	38	44	30	18,5	13	42	66
17	19/24	17	20	20	24	50	42	52	40	25	16	53	82,5
20	24/28	20	28	28	28	70	62	68	55	30	18	63	102
25	28/38	25	38	35	38	85	75	84	65	35	20	74,5	119,5
35	38/45	35*	45	45	45	100	82	100	80	45	24	93	146
42	42	42	50	50	55	115	97	115	95	50	26	100	157
50	48	50	60	55	60	135	117	138	105	56	28	110,5	178,5

*: maximum diameter for finished bore with reduced keyway according to UNI 7510.
F_1, F_2, F_3, F_4: bore tolerance H7.

	Size		12	17	20	25	35	42	50
Torque limiter	Limit torques for overload	[Nm]	0,8 - 7,5	3 - 23	5 - 50	9 - 100	20 - 200	35 - 415	75 - 720
	Maximum speed	[rpm]	4000	4000	4000	3000	2500	2000	1200
	Thrust washer stroke on overload	[mm]	0,8	1	1,1	1,3	1,5	2	2,2

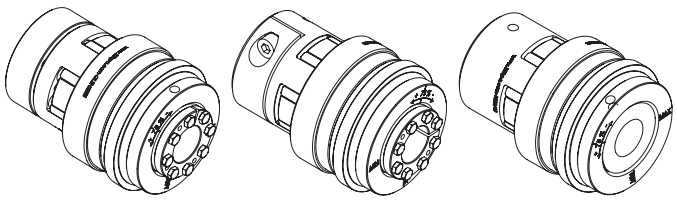

	Size			14	19/24	24/28	28/38	38/45	42	48
TRASCO ES® coupling	Nominal torque	92 Sh A	[Nm]	7,5	10	35	95	190	265	310
		98 Sh A		12,5	17	60	160	325	450	525
		64 Sh D		16	21	75	200	405	560	655
	Maximum torque	92 Sh A		15	20	70	190	380	530	620
		98 Sh A		25	34	120	320	650	900	1050
		64 Sh D		32	42	150	400	810	1120	1310
	Maximum axial misalignment	92 Sh A	[mm]	1,0	1,2	1,4	1,5	1,8	2,0	2,1
		98 Sh A		1,0	1,2	1,4	1,5	1,8	2,0	2,1
		64 Sh D		1,0	1,2	1,4	1,5	1,8	2,0	2,1
	Maximum radial misalignment	92 Sh A		0,15	0,10	0,14	0,15	0,17	0,19	0,23
		98 Sh A		0,09	0,06	0,10	0,11	0,12	0,14	0,16
		64 Sh D		0,06	0,04	0,07	0,08	0,09	0,10	0,11
	Maximum angular misalignment	92 Sh A	[°]	1,0	1,0	1,0	1,0	1,0	1,0	1,0
		98 Sh A		0,9	0,9	0,9	0,9	0,9	0,9	0,9
		64 Sh D		0,8	0,8	0,8	0,8	0,8	0,8	0,8

Mass moments of inertia	Pressure flange side	Bore and keyway	[x10^{-6} kgm^2]	20	40	270	680	1510	2620	6330
		Locking device		20	40	280	710	1580	2820	6820
	Hub side	GESF - Bore and keyway		23	61	228	763	1747	6303	13434
		GESM - Clamping hub		23	59	252	727	1812	7152	14808
		GESA - Shrink disc		27	71	312	878	2306	7207	14848

	Combinations			Total weight						
	Torque limiters	Coupling								
Weight	Bore and keyway	GESF	[kg]	0,269	0,543	1,190	2,028	3,715	7,061	11,453
	Clamping device	GESM		0,267	0,548	1,214	2,115	3,900	7,561	12,433
	Clamping device	GESA		0,298	0,597	1,338	2,325	4,410	7,761	12,613

Screws	Clamping device torque limiter	N° and type	-	6 x M3	6 x M3	8 x M4	8 x M5	8 x M6	8 x M6	8 x M8
		Tightening torque	[Nm]	1,5	1,5	3,0	5,0	7,5	7,5	14,0
	GESF - Set screw	Type	-	M4	M5	M5	M6	M8	M8	M8
		Tightening torque	[Nm]	1,5	2,0	2,0	4,0	10,0	10,0	10,0
	GESM - Clamping screw	Type	-	M3	M6	M6	M8	M8	M10	M12
		Tightening torque	[Nm]	1,3	11,0	11,0	25,0	25,0	70,0	120,0
	GESA - Shrink disc screws	N° and type (12.9)	-	4 x M3	6 x M4	4 x M5	8 x M5	8 x M6	4 x M8	4 x M8
		Tightening torque	[Nm]	1,3	2,9	6,0	6,0	10,0	35,0	35,0

TRASCO® ES Coupling Shrink Disc Transmissible Torque

Type		Transmissible torque [Nm] related to shaft diameter [mm]																							
Torque limiters	Coupling	10	11	14	15	16	17	18	19	20	22	24	25	28	30	32	35	38	40	42	45	48	50	55	60
12	**19/24**	48	53	67	72	77	81	86	91	96															
17	**24/28**				77	82	88	93	98	103	113	124	129	144											
20	**28/38**							186	196	206	227	247	258	289	309	330	361	392							
25	**38/45**									291	320	349	364	408	437	466	510	553	582	612	655	699			
35	**42**													345	584	623	681	740	779	818	876	934	973	1071	
50	**48**																681	740	779	818	876	934	973	1071	1168

Notes:
The data are related to application with red AES spider 98 Sh A. The weights refer only to applications with coupling with pilot bore. Inertias refer to applications with couplings with maximum bore.

SAFEMAX® - Torque limiters “GLS/SG/N” with SERVOPLUS®

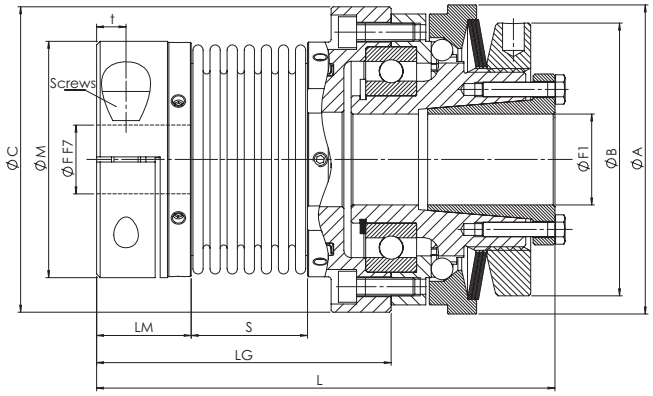

Locking device execution / GSP

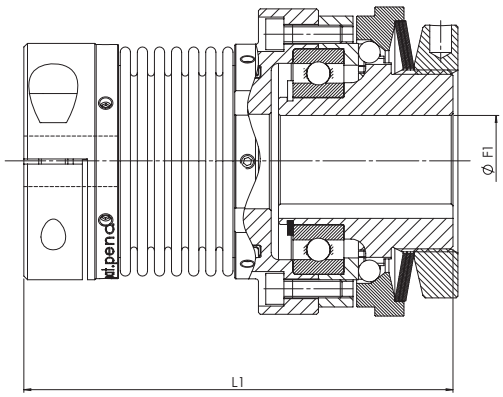

Bore and keyway execution / GSP

Torque limiter size	SERVOPLUS® Size	Dimensions											
		F min [mm]	F max [mm]	F_1 max [mm]	A [mm]	B [mm]	C [mm]	M [mm]	L_m [mm]	S [mm]	L_g [mm]	L [mm]	L_1 [mm]
12	16	5	16	12	44	38	43	34	17	16,5	48	72	67,5
17	20	8	20	17	50	42	49	40	20,5	21	58	87,5	82
20	30	10	30	20	70	62	65	55	22,5	27	69	108	101
25	38	14	38	25	85	75	84	65	26	32	81	126	118
35	45	14	45	35*	100	82	104	83	31	41	102	155	147

F: bore tolerance F7.
F_1: bore tolerance H7.
*: maximum diameter for finished bore with reduced keyway according to UNI 7510.

	Size		12	17	20	25	35
Torque limiter	Limit torques for overload	[Nm]	0,8 - 7	3 - 23	5 - 50	9 - 100	20 - 200
	Maximum speed	[rpm]	4000	4000	4000	3000	2500
	Thrust washer stroke on overload	[mm]	0,8	1,0	1,1	1,3	1,5

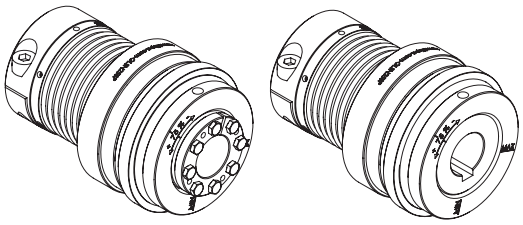

	Size		16	20	30	38	45
SERVOPLUS® coupling	Nominal torque	[Nm]	5	15	35	65	150
	Maximum torque	[Nm]	10	30	70	130	300
	Maximum axial misalignment	[mm]	-/+0,5	-/+0,6	-/+0,8	-/+0,8	-/+1,0
	Maximum radial misalignment	[mm]	0,20	0,20	0,25	0,25	0,30
	Maximum angular misalignment	[°]	1,5	1,5	2,0	2,0	2,0

Mass moments of inertia	Pressure flange side	Bore and keyway	[x10^{-6} kgm^2]	20	40	270	680	1510
		Locking device		20	40	280	710	1580
	Hub side	Clamping hub		28	55	248	726	2152

	Combinations			Total weight				
Weight	Torque limiters	Coupling						
	Bore and keyway	Clamping hub	[kg]	0,290	0,539	1,212	2,004	3,870
	Locking device	Clamping hub		0,290	0,539	1,212	2,104	4,070

Screws	Clamping device torque limiter	N° and type	-	6 x M3	6 x M3	8 x M4	8 x M5	8 x M6
		Tightening torque	[Nm]	1,5	1,5	3,0	5,0	7,5
	GSP - Bellows set screw	Type	-	4 x M3	4 x M3	4 x M4	6 x M4	6 x M5
		Tightening torque	[Nm]	0,8	0,8	2,0	2,0	3,8
	Clamping screw	Type	-	M4	M5	M6	M8	M10
		Tightening torque	[Nm]	2,9	6,0	10,0	25,0	49,0

SAFEMAX®

SERVOPLUS® Coupling Clamping Hub Transmissible Torque

Type		Transmissible torque [Nm] related to shaft diameter [mm]																							
Torque limiters	Coupling	5	6	7	8	9	10	11	12	14	15	16	18	19	20	24	25	28	30	32	35	38	40	42	45
12	16	5	6	7	8	9	10	11	12	14	15	16													
17	20				13	14	16	18	19	22	24	25	29	30	32										
20	30							25	27	32	34	36	41	43	45	54	57	63	68						
25	38												75	79	83	100	104	116	124	133	145	158			
35	45														132	158	165	183	198	211	231	248	263	277	295

Notes:
The data are related to applications with pilot bore coupling.
The weights refer only to application with couplings with pilot bore.

SAFEMAX® - Torque limiters “GLS/SG/N” with SERVOMATE®

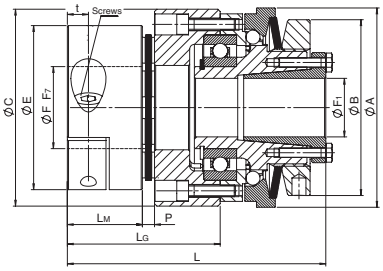

Locking device execution / GSM

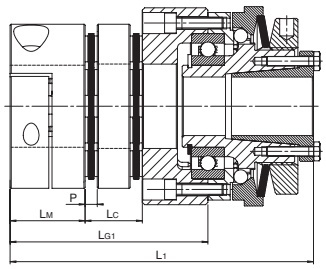

Locking device execution / GSMC

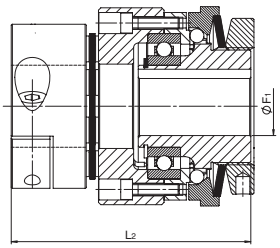

Bore and keyway execution / GSM

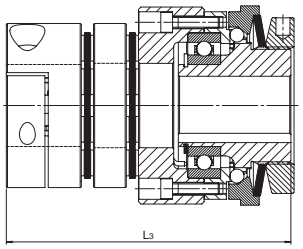

Bore and keyway execution / GSMC

Torque limiter size	SERVOMATE® Size	Dimensions														
		F max [mm]	F_1 max [mm]	A [mm]	B [mm]	C [mm]	E [mm]	L_m [mm]	P [mm	L_c [mm	L_g [mm]	L_{g1} [mm]	L [mm]	L_1 [mm]	L_2 [mm]	L_3 [mm]
17	15	20	17	50	42	52	47	21	3	13	40	50	69,5	79,5	64	74
20	20	25	20	70	62	68	59	24	4	19	48	63	87	102	80	95
25	25	35	25	85	75	84	70	32	5	24	65	84	110	129	102	121

F: bore tolerance F7.
F_1: bore tolerance H7.

	Size		17	20	25
Torque limiter	Limit torques for overload	[Nm]	3 - 23	5 - 50	9 - 100
	Maximum speed	[rpm]	4000	4000	3000
	Thrust washer stroke on overload	[mm]	1,0	1,1	1,3

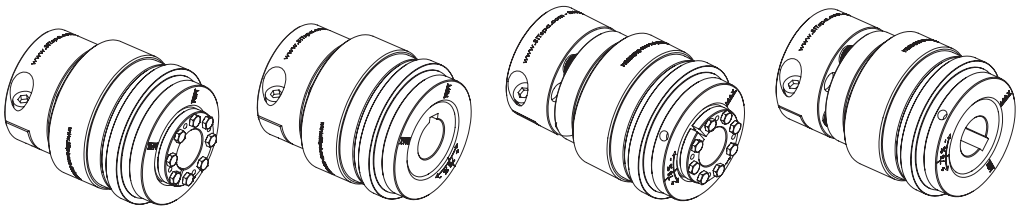

	Size		Standard			With spacer		
			15	20	25	15	20	25
SERVOMATE® coupling	Nominal torque	[Nm]	20	30	60	20	30	60
	Maximum torque	[Nm]	40	60	120	40	60	120
	Maximum axial misalignment	[mm]	0,5	0,6	0,8	1,0	1,2	1,6
	Maximum radial misalignment	[mm]	-	-	-	0,16	0,25	0,30
	Maximum angular misalignment	[°]	1,0	1,0	1,0	1,0	1,0	1,0

Mass moments of inertia	Pressure flange side	Bore and keyway	[x10^{-6} kgm^2]	40	270	680	40	270	680
		Locking device		40	280	710	40	280	710
	Hub side	Clamping hub		70	272	838	82	318	950

	Combinations			Total weight					
	Torque limiters	Coupling							
Weight	Bore and keyway	Clamping hub	[kg]	0,556	1,218	2,090	0,594	1,310	2,247
	Locking device	Clamping hub		0,556	1,218	2,190	0,594	1,310	2,347

Screws	Clamping device torque limiter	N° and type	-	6 x M3	8 x M4	8 x M5
		Tightening torque	[Nm]	1,5	3,0	5,0
	Clamping screw	Type	-	M6	M6	M8
		Tightening torque	[Nm]	10,0	10,0	25,0

SAFEMAX®

SERVOMATE® Coupling Clamping Hub Transmissible Torque																
Type		Transmissible torque [Nm] related to shaft diameter [mm]														
Torque limiters	Coupling	Ø10	Ø11	Ø12	Ø14	Ø15	Ø16	Ø19	Ø20	Ø22	Ø24	Ø25	Ø28	Ø30	Ø32	Ø35
17	15	20	22	24	28	30	32	38	40	-	-	-	-	-	-	-
20	20	-	-	24	28	30	32	38	40	44	48	50	-	-	-	-
25	25	-	-	-	-	55	59	70	73	81	88	92	103	110	117	128

Notes:
The data are related to applications with pilot bore coupling.
The weights refer only to application with couplings with pilot bore.

General Information

Company Name
address

Contact Information

First Name
address
Job Title Phone

Last Name

Email address

Requested quantity

Annual expected quantity

Application

Application field

Type of machine
Where the Torque limiter will be applied and whats to be protected

Rated torque (Nm)
Speed (Rpm)

Work Environment
Clean
Presence of dust
Presence of oil
humidity%
other elements

Re-engagement position
equidistant
360°
Not important
other

Transmission type
parallel
coaxial

Motor shaft diameter (mm)

Shaft connection type
Bore and keyway
Clamping ring
other

Type of component (Gear, sprocket, ... Parallel Transmission)
Type of coupling (coaxial Transmission)
Driven shaft diameter (mm)
Connection type driven shaft
bore and keyway
Clamping ring
Other

Notes

Please attach application drawing

METALDRIVE® Disc Couplings

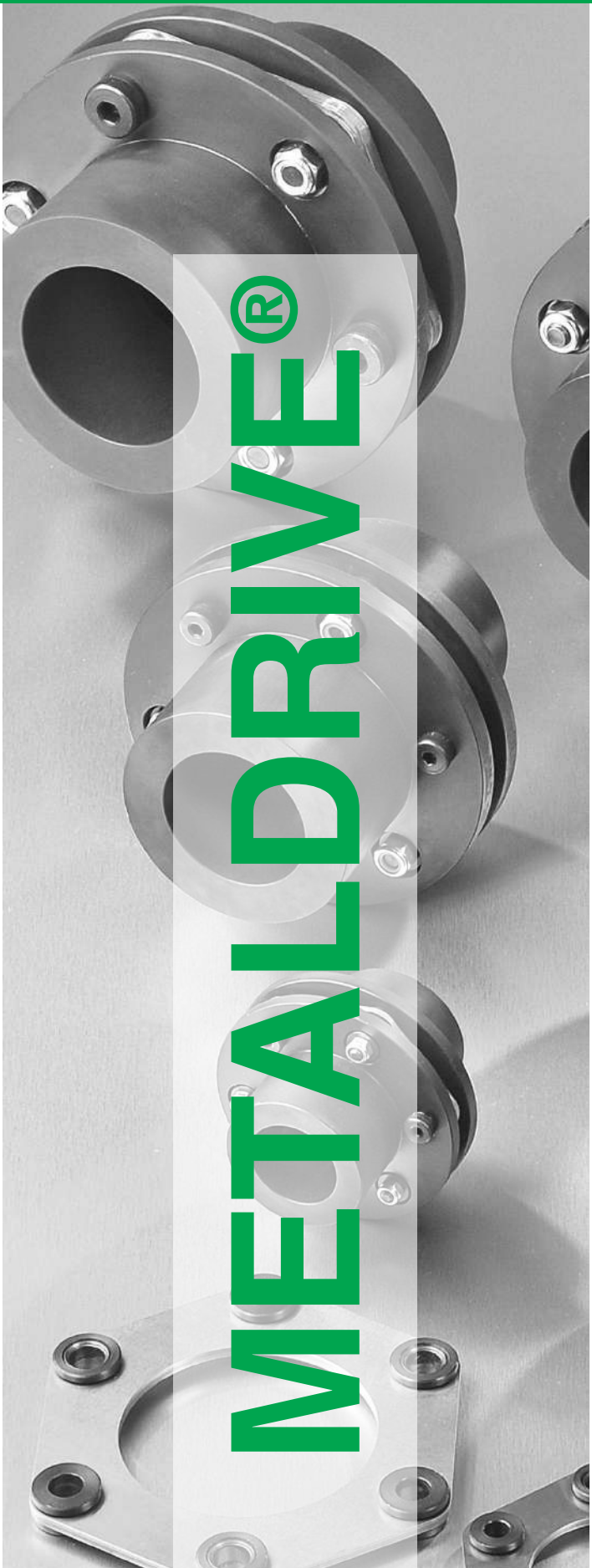

Contents

METALDRIVE® disc couplings

METALDRIVE® couplings are fully made of steel and are used in all applications where high reliability, precision, and no maintenance are required.

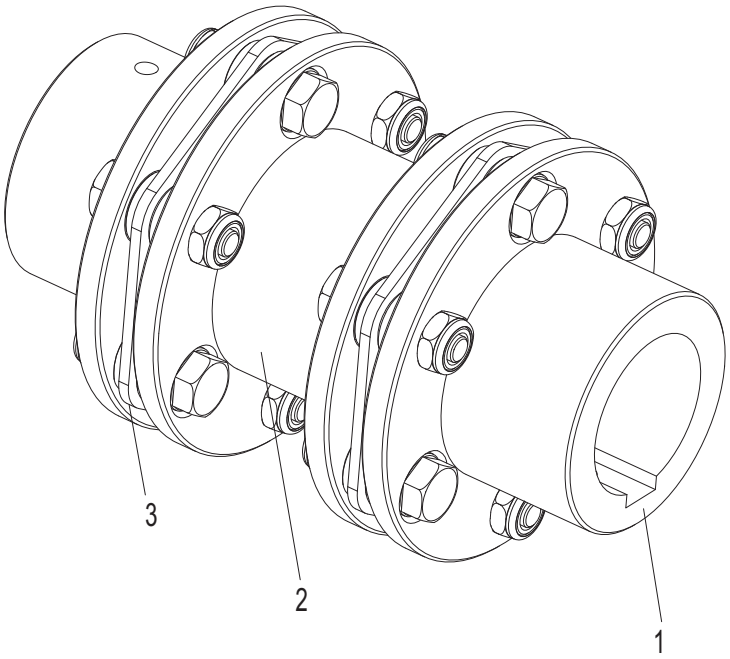

1) Hub
2) Spacer
3) Disc pack

Features

- All steel
- Superior disc pack profile and assembly optimized for higher torque and misalignment and lower restoring forces
- Maintenance, lubrication and wear free
- Backlash free and torsionally rigid
- Wide range of temperature allowed: -40 °C to 250 °C
- Easy installation
- Bi-directional
- Modular design
- Allow axial, angular, and radial misalignment (only with double disc pack)
- Available in stainless steel for corrosive environment application
- **Approved according to ATEX Directive 2014/34/EU.**

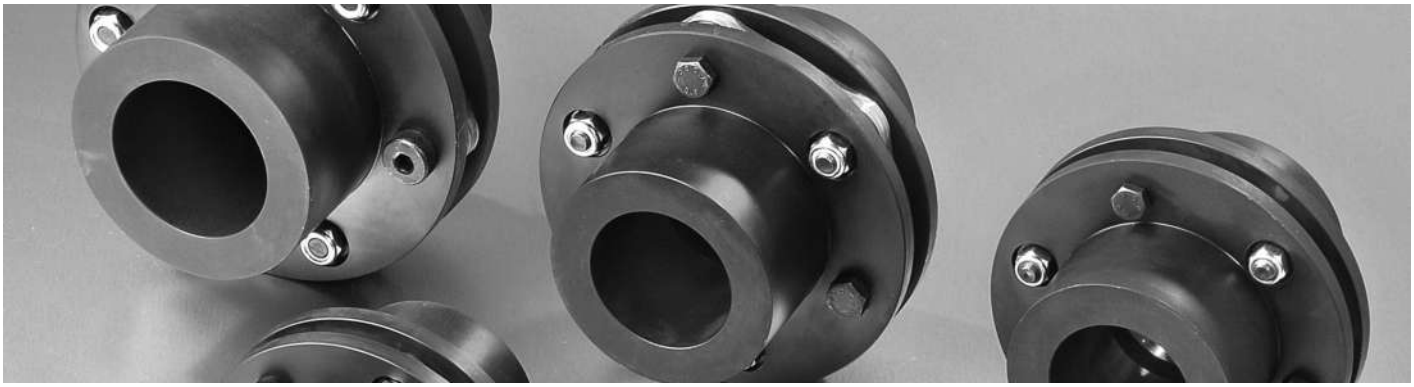

Esecuzioni dei giunti METALDRIVE®

GMD type S

Standard version with single disc pack. The coupling allows axial and angular misalignment. No radial misalignment is allowed.

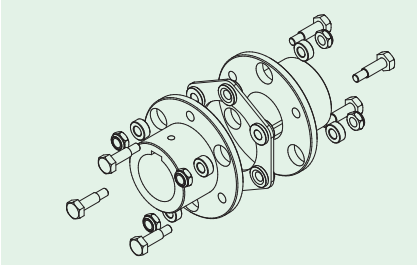

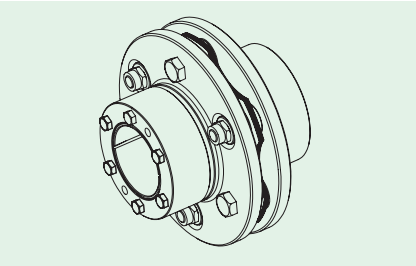

GMD type E-I

Standard version with shrink disc.

GMD type DC

Standard version with double disc pack and standard length spacer. Allows axial angular and radial misalignment. It is possible to mount the hubs reverse (hub R) to obtain a compact drive. It is not possible the radially mounting of the spacer.

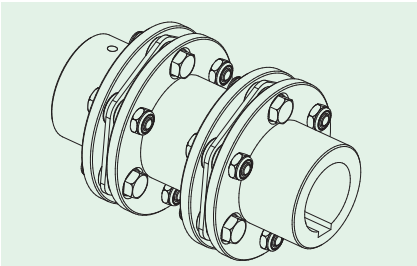

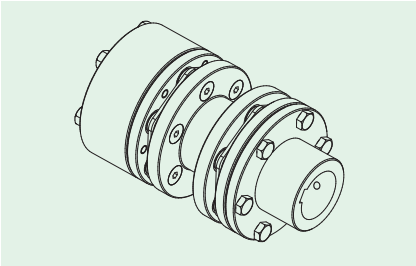

GMD type DCA

Double disc pack execution and anti-fail device. Standard spacer lengths for pump applications. This execution is available in conformity to API 610 e API 671.

GMD type SA1

Tubular shaft version. Shaft is available in various lengths and can be delivered in welded aluminum or steel.
Available with carbon shaft.

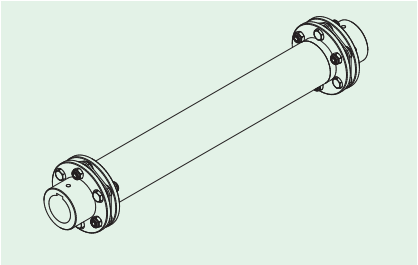

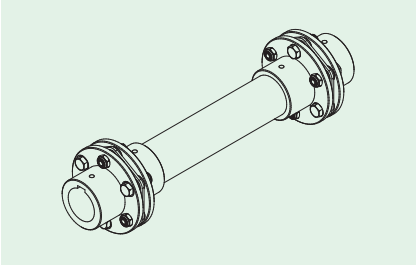

GMD type SA2

Shaft version with solid shaft construction. Variable shaft lengths are available.

Technical Features

Size	Torque (Nm)			Misalignment				Max rotation speed without balancing [min^{-1}]	Torsional stiffness per disc pack [Nm/rad•10^6]
	Nominal Tkn[Nm]	Max Tkmax [Nm]	Reverse Tkw [Nm]	Axial ΔKa [mm] per disc pack	Angular α [°] per disc pack	Radial Δkr DCL execution	Radial ΔKr [mm] with spacer		
32-6	100	200	30	0,8	0,75	0,32	$(P_1-P) \cdot \tan\alpha$	11500	0,12
38-6	150	300	50	0,9	0,75	0,42		10000	0,16
45-6	300	600	100	1,2	0,75	0,53		8200	0,42
52-6	700	1400	230	1,4	0,75	0,74		6700	0,98
65-6	1100	2200	370	1,6	0,75	0,84		5700	1,85
80-6	1700	3400	570	1,8	0,75	0,92		5000	2,24
90-6	2600	5200	870	1,8	0,75	0,96		4500	3,6
95-6	4000	8000	1330	2	0,75	1,45		4100	9
110-6	7000	14000	2330	2,2	0,75	1,45		3600	11,90
120-6	9000	18000	3000	2,4	0,75	1,6		3100	14,20
138-6	12000	24000	4000	2,6	0,75	1,6		2900	15,60
155-8	25000	50000	8330	2,9	0,5	2,95		2600	37,80
175-8	35000	70000	11670	3,1	0,5	3,15		2400	51,60
190-8	50000	100000	16670	3,4	0,5	3,4		2200	64,40
205-8	65000	130000	21670	3,8	0,5	3,85		2000	69,50

The torsional rigidity of a coupling with spacer is calculated as follows:

$$C_T = \frac{1}{\frac{2}{C_{TL}} + \frac{P_1 - 2P}{C_{TS}}}$$

With C_{TS} = spacer torsional rigidity
Operating speed must be equal or less than permissible speed.

METALDRIVE® coupling balancing

All the components of the METALDRIVE® couplings are completely machined (spacer excluded) and balanced in class DIN ISO 1940-1 Q 6,3. Therefore, the balancing is unnecessary in most applications.
In cases where a higher degree of balancing is required, it is important to consider:

- Rotation speed and coupling diameter
- Rotation speed and intermediate shaft length
- Rotation speed and special balancing need of the machine

According to the requirement, METALDRIVE® coupling can be statically or dynamically balanced according to DIN ISO 1940-1. As a standard, the balancing is made on the single coupling component. On specific request the assembled coupling can be balanced. Also as a standard the balancing is made before the key seat machining. The balancing after the key seat machining is made on specific request. Permissible speed could be limited by the weight and critical speed of spacers. Please consult our technical department.

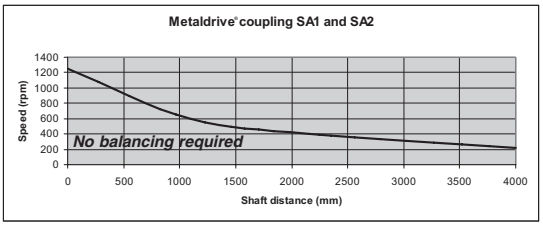

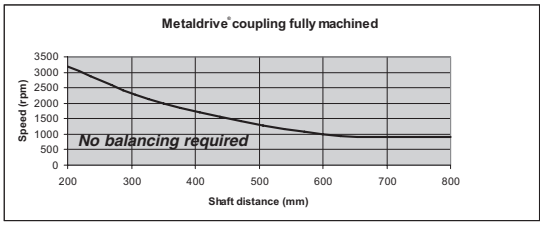

Working temperature

-40 °C + 250 °C

Misalignment

METALDRIVE® couplings with double disc packs allow axial, angular, and radial misalignment.
METALDRIVE® couplings with a single disc pack allows only axial and angular misalignment.
Please note that application must not have the maximum value of axial and angular misalignment at the same time.

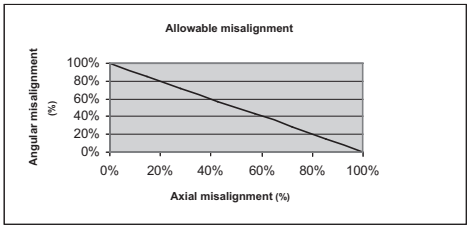

METALDRIVE®

METALDRIVE® GMD type “S”

Standard version with single disc pack. The coupling allows axial and angular misalignment. No radial misalignment is allowed.

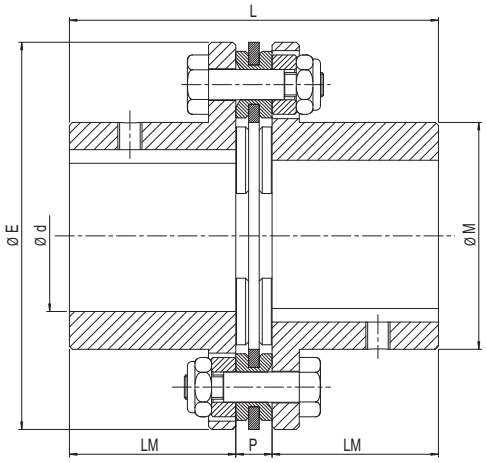

Size	Dimensions [mm]							Screws		
	Prebored	d max	E	M	LM	P	L	n°	Type	Tightening torque Ms [Nm]
32	-	32	80	45	40	8	88	6	M5	8,5
38	-	38	92	53	45	8	98	6	M5	8,5
45	-	45	112	64	45	10	100	6	M6	14
52	-	52	136	75	55	12	122	6	M8	35
65	-	65	162	92	65	13	143	6	M10	69
80	35	80	182	112	80	14	174	6	M10	69
90	50	90	206	130	80	15	175	6	M12	120
95	55	95	226	135	90	22	202	6	M14	190
110	65	110	252	155	100	25	225	6	M16	295
120	75	120	296	170	110	32	252	6	M24	1000
138	80	138	318	195	140	32	312	6	M24	1000
155	80	155	352	218	150	32	332	8	M24	1000
175	80	175	386	252	175	37	387	8	M27	1500
190	80	190	426	272	190	37	417	8	M30	2000
205	80	205	456	292	205	42	452	8	M33	2450

Order form

Hub/Disc pack

GMD 032 MF16

GMD: METALDRIVE® hub

Size

M: solid standard hub
PL: Disc pack
F…: bore diameter

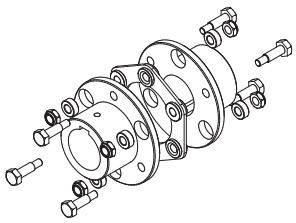

METALDRIVE® GMD type “E-I”

Standard version with shrink disc.

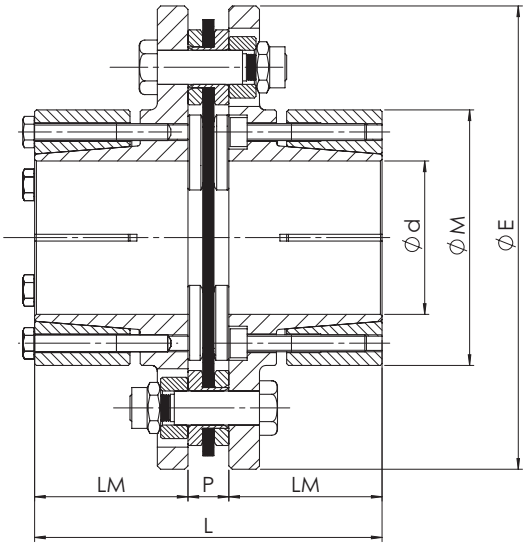

Size	Dimensions [mm]							Screws			Disc pack screws		
	F min	F max	E	M	LM	P	L	n°	Type	Tightening torque Ms [Nm]	n°	Type	Tightening torque Ms [Nm]
38	14	26	92	55	40	8	88	4	M5	6	6	M5	8,5
45	14	38	112	65	40	10	90	8	M5	6	6	M6	14
52	25	45	136	75	45	12	102	6	M5	8	6	M8	35
65	30	48	162	85	50	13	113	6	M6	8	6	M10	69
80	35	60	182	105	55	14	124	6	M8	35	6	M10	69
90	35	65	206	120	60	15	135	6	M8	35	6	M12	120

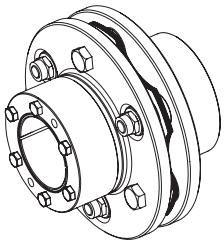

METALDRIVE® GMD type “DC”

Standard version with double disc pack and spacer.

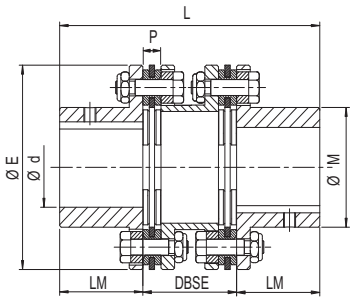

DC

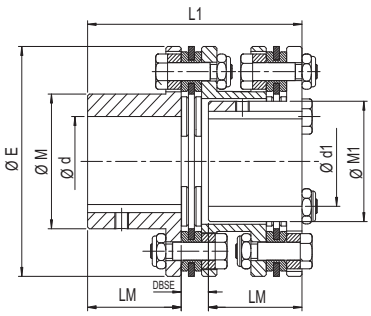

DC 1MR

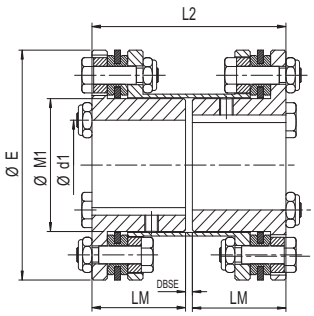

DC 2MR

Size	Dimensions [mm]												
	d max	E	M	LM	P	DC		M1	d1	DC 1MR		DC 2MR	
						DBSE min.	L			DBSE min.	L1	DBSE min.	L2
32	32	80	45	40	8	45	DBSE + 80	35	25	12	DBSE + 80	3	DBSE + 80
38	38	92	53	45	8	50	DBSE + 90	43	30	12	DBSE + 90	3	DBSE + 90
45	45	112	64	45	10	52	DBSE + 90	54	38	14	DBSE + 90	3	DBSE + 90
52	52	136	75	55	12	62	DBSE + 110	63	45	16	DBSE + 110	3	DBSE + 110
65	65	162	92	65	13	73	DBSE + 130	73	52	17	DBSE + 130	4	DBSE + 130
80	80	182	112	80	14	86	DBSE + 160	85	60	18	DBSE + 160	4	DBSE + 160
90	90	206	130	80	15	87	DBSE + 160	101	72	19	DBSE + 160	6	DBSE + 160
95	95	226	135	90	22	103	DBSE + 180	102	75	26	DBSE + 180	6	DBSE + 180
110	110	252	155	100	25	114	DBSE + 200	126	90	29	DBSE + 200	6	DBSE + 200
120	120	296	170	110	32	135	DBSE + 220	132	95	41	DBSE + 220	6	DBSE + 220
138	138	318	195	140	32	157	DBSE + 280	154	110	37	DBSE + 280	8	DBSE + 280
155	155	352	218	150	32	163	DBSE + 300	180	130	35	DBSE + 300	8	DBSE + 300
175	175	386	252	175	37	191	DBSE + 350	210	150	43	DBSE + 350	10	DBSE + 350
190	190	426	272	190	37	203	DBSE + 380	230	170	43	DBSE + 380	10	DBSE + 380
205	205	456	292	205	42	220	DBSE + 410	235	175	48	DBSE + 410	12	DBSE + 410

METALDRIVE® GMD type “DCA” (API 671-API 610)

Standard version with double disc pack and standard length spacer. Double disc pack execution with anti-fail device. Various spacer lengths available for pump applications. Conforms to API 610 - API 671.

API 671

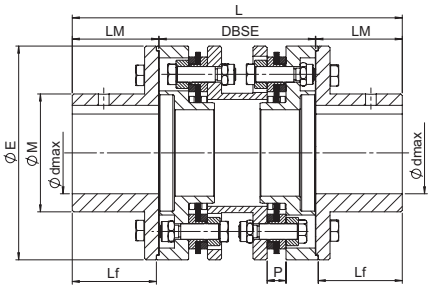

DCA2MP

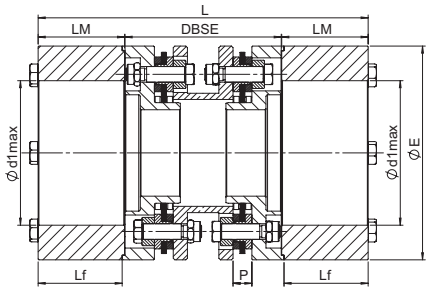

DCA2MG

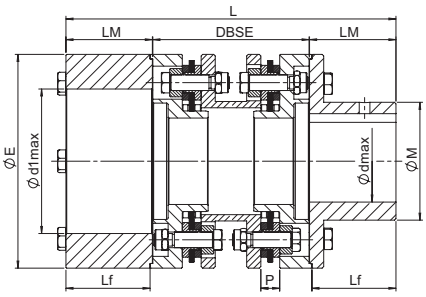

DCAMPMG

Size	Dimensions [mm]												
	d max.	d1 max.	E	M	Lf	P	LM	DBSE					L
								min.	100	140	180	250	
32	35	48	80	50	38,5	8	40	80	X	X			DBSE + 80
38	42	55	92	60	43,5	8	45	90	X	X			DBSE + 90
45	52	75	112	74	43,5	10	45	90	X	X			DBSE + 90
52	65	92	136	90	53,5	12	55	100	X	X	X		DBSE + 110
65	80	105	162	112	63,5	13	65	120		X	X	X	DBSE + 130
80	95	120	182	132	78	14	80	140		X	X	X	DBSE + 160
90	105	135	206	150	78	15	80	140		X	X	X	DBSE + 160
95	118	-	226	165	88	22	90	160			X	X	DBSE + 180
110	125	-	252	175	98	25	100	180			X	X	DBSE + 200
120	140	-	296	198	108	32	110	220	ON REQUEST				DBSE + 220
138	155	-	318	217	137	32	140	260					DBSE + 280
155	180	-	352	245	147	32	150	280					DBSE + 300
175	190	-	386	270	172	37	175	310					DBSE + 350
190	205	-	426	290	186	37	190	340					DBSE + 380
205	230	-	456	325	201	42	205	370					DBSE + 410

These DBSE sizes are more readily available. Other lengths to suit specific shaft separations are available on request.

METALDRIVE® GMD type “SA1” - “SA2”

Metaldrive coupling with intermediate shaft is available in two versions:

SA1: Tubular Shaft version. Shaft is available in various lengths and can be delivered in welded aluminum, steel or **carbon**.

SA2: Solid shaft construction. Shaft is available in various lengths.

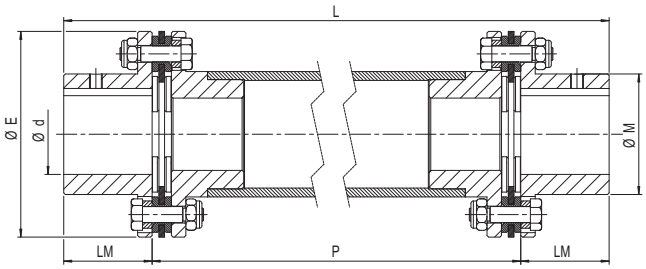

SA1

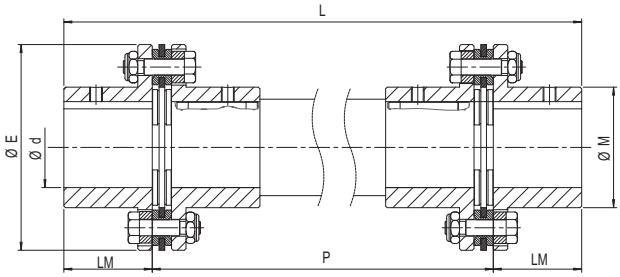

SA2

Size	Dimensions [mm]					
	d max	E	M	LM	P	L
32	32	80	45	40	Shaft lengths on request	P+ 80
38	38	92	53	45		P+ 90
45	45	112	64	45		P+ 90
52	52	136	75	55		P+ 110
65	65	162	92	65		P+ 130
80	80	182	112	80		P+ 160
90	90	206	130	80		P+ 160
95	95	226	135	90		P+ 180
110	110	252	155	100		P+ 200
120	120	296	170	110		P+ 220
138	138	318	195	140		P+ 280
155	155	352	218	150		P+ 300
175	175	386	252	175		P+350
190	190	426	272	190		P+ 380
205	205	456	292	205		P+ 410

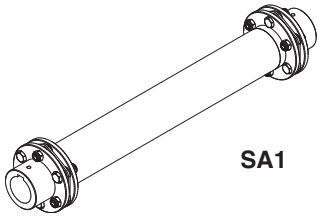

SA1

Coupling configurator

Coupling code	Item	Type	Execution	Bore diameter	Order example
GMDL032	*Hub 1*	GMD	S	F…	GMD032MF30
	(SA1 o SA2) type and distance between two side shaft Length P				SA1 P = 1200 mm
	Hub 2	GMD	S	F…	GMD032MF25

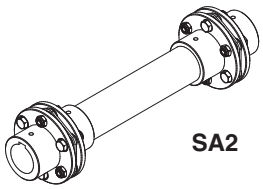

SA2

Hub-shaft connections

keyway hub

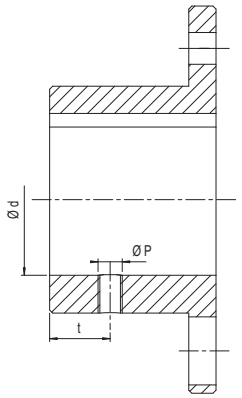

up to size 52

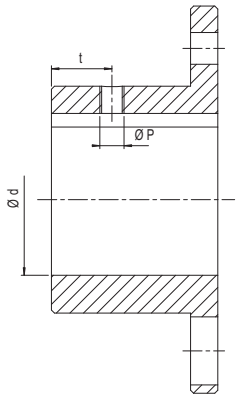

from size 65

Size	Prebored [mm]	d max [mm]	P	t [mm]	Setscrew tightening torque Ms [Nm]
32	-	32	M6	15	4,8
38	-	38	M6	15	4,8
45	-	45	M8	20	10
52	-	52	M8	20	10
65	-	65	M8	20	10
80	35	80	M10	20	17
90	50	90	M12	25	40
95	55	95	M12	30	40
110	65	110	M12	30	40
120	75	120	M12	30	40
138	80	138	a richiesta		
155	80	155			
175	80	175			
190	80	190			
205	80	205			

Shrink disc executions

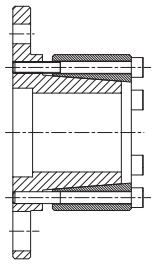

Shrink disc hub E

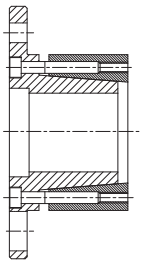

Shrink disc hub I

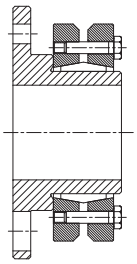

With SIT-LOCK® 11S

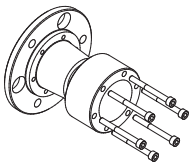

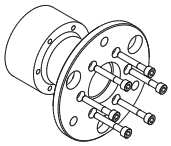

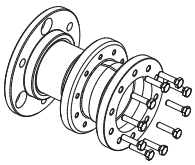

Split collar design

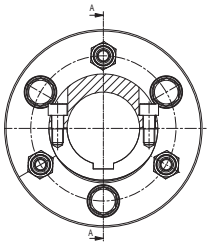

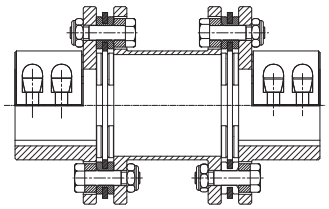

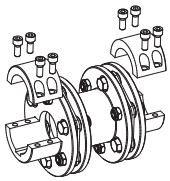

METALDRIVE®

Selection procedure

Definitions

T_{Kmax} = peak torque capacity for a maximum of 10^5 times [Nm]
T_{Kn} = torque transmissible by the coupling at the maximum RPM with the allowable misalignments [Nm]
T_{KW} = maximum torque variation allowable by the coupling from the nominal torque T_{KN} with a frequency of 10 Hz [Nm]

Coupling selection

- Calculate the nominal torque to be transmitted:

$$T_N = \frac{9550 \cdot P}{n}$$

T_N = nominal torque of the machine [Nm]
P = input power (kW)
n = RPM (1/min)

- Verify coupling nominal torque T_{KN}:

$$T_{Kn} \quad T_N \cdot k$$

k = service factor

- Verify coupling maximum torque with machine peak and starting torque. It is allowed up to 5 peaks or start up per hour:

$$T_{Kmax} \quad T_S$$

T_S = starting or peak torque [Nm]

- In case of direct start with AC motor, it is important to consider driver and driven inertias. In case of transmission with torque inversion, the maximum torque variation T_W should not be higher than the maximum coupling torque T_{KW}.

$$T_{KW} \quad T_W$$

- Verify working conditions.

Particularly maximum speed must not exceed the permissible value. Dynamic balancing (optional) allows higher speeds. Permissible speed could be limited by the weight and critical speed of spacers. Please consult with our technical department.

Service factor k and load classification

Compressors	
Piston compressors	H
Turbo compressors	M
Blowers, Ventilators	
Rotary piston blowers	M
Blowers (axial / radial)	U
Cooling tower fans	M
Turbo blowers	U
Pumps	
Centrifugal pumps (low viscosity liquid)	U
Centrifugal pumps (viscous liquid)	M
Piston pumps	H
Plunger pumps	H
Pressure pumps	H
Food industry machinery	
Bottling and container filling	U
Cane crushers, knives, mills	M
Bread machines	U
Packaging machines	U
Sugar beet machines	M
Chemical industry	
Agitators (liquid material)	U
Agitators (semi-liquid material	M
Centrifuges (heavy)	M

Centrifuges (light)	U
Drums	M
Mixers	M
Building machinery	
Concrete mixers	M
Hoists	M
Road construction machinery	M
Generators, transformers	
Frequency transformers	H
Generators	M
Welding generators	M
Cranes	
Hoisting	U
Slewing	M
Travelling	H
Laundry machines	
Tumblers	M
Washing machines	M
Wood working machines	
Barkers	H
Planning machines	M
Saw frames	H
Wood working machines	U

Marble, clay, and stone working machines	
Mills	H
Breakers	H
Brick presses	H
Ovens (rotary)	H
Metal rolling mills	
Cold rolling mills	H
Casting plants (continuous)	H
Heavy and medium plate mills	H
Manipulators	H
Roller tables (heavy)	H
Roller tables (light)	M
Sheet mills	H
Forging presses	H
Hammers	H
Machine tools, auxiliary drive	U
Machine tools, main drives	M
Metal planning machines	H
Plate straightening machine	H
Presses	H
Sheet metal bending machines	M

Driver machine	Driver machine load class		
	U	**M**	**H**
Electric motor, turbine, hydraulic motor	1,1	1,5	2
Piston engines with more than 3 cylinders	1,5	1,7	2,3
Piston engines up to 3 cylinders	1,7	2	2,6

U = uniform load
M = medium frequency peak load
H = high frequency peak load

METALDRIVE® couplings weight and inertia

Size	Component										Complete coupling											
	Hub with max bore				Spacer GMD type DC				Disc pack		GMD type S hub with max bore		GMD type DCL hub with max bore		GMD type DCC hub with max bore		GMD type DC1MR hub with max bore		GMD type 2MR hub with max bore		GMD type DCC1MR hub with max bore	
	Hub M		Hub M1		Type P1		Type P2															
	Weight kg	Moment of inertia kg x m²	Weight kg	Moment of inertia kg x m²	Weight kg	Moment of inertia kg x m²	Weight kg	Moment of inertia kg x m²	Weight kg	Moment of inertia kg x m²	Weight kg	Moment of inertia kg x m²	Weight kg	Moment of inertia kg x m²	Weight kg	Moment of inertia kg x m²	Weight kg	Moment of inertia kg x m²	Weight kg	Moment of inertia kg x m²	Weight kg	Moment of inertia kg x m²
32	0,38	0,000253	0,32	0,00021	0,52	0,00042	0,42	0,00038	0,078	0,000034	0,8	0,0005	1,4	0,001	1,3	0,001	1,3	0,001	1,2	0,001	1,2	0,001
38	0,57	0,00049	0,5	0,0004	0,71	0,00081	0,58	0,0007	0,094	0,000109	1,2	0,0011	2	0,002	1,9	0,0019	1,9	0,0019	1,8	0,0018	1,8	0,0018
45	0,86	0,0011	0,76	0,00092	0,97	0,0016	0,82	0,0015	0,183	0,00031	1,9	0,0025	3,1	0,0044	3	0,0043	3	0,0042	2,9	0,004	2,9	0,0041
52	1,57	0,0029	1,22	0,0024	1,7	0,0044	1,5	0,0041	0,31	0,00076	3,5	0,0066	5,5	0,0117	5,3	0,0114	5,2	0,0112	4,9	0,0107	5	0,0109
65	2,5	0,0064	2,1	0,0055	2,4	0,009	2,1	0,0082	0,45	0,0015	5,5	0,0143	8,3	0,0248	8	0,024	7,9	0,0239	7,5	0,023	7,6	0,0231
80	4,3	0,0147	3,87	0,0126	4	0,02	3,4	0,018	0,56	0,0024	9,2	0,0318	13,7	0,0542	13,1	0,0522	13,3	0,0521	12,9	0,05	12,7	0,0501
90	5,9	0,026	5,1	0,021	5,4	0,033	4,4	0,03	0,75	0,0042	12,6	0,0562	18,7	0,0934	17,7	0,0904	17,9	0,0884	17,1	0,0834	16,9	0,0854
95	7,2	0,037	6,4	0,032	6,8	0,05	5,8	0,045	1,7	0,012	16,1	0,086	24,6	0,148	23,6	0,143	23,8	0,143	23	0,138	22,8	0,138
110	10,3	0,068	9,2	0,057	10	0,09	8,3	0,08	2,4	0,022	23	0,158	35,4	0,27	33,7	0,26	34,3	0,259	33,2	0,248	32,6	0,249
120	14,4	0,125	13,1	0,11	13,7	0,17	11,8	0,16	4,9	0,058	33,7	0,308	52,3	0,536	50,4	0,526	51	0,521	49,7	0,506	49,1	0,511
138	22,6	0,232	18,9	0,19	21,3	0,3	17,4	0,27	5,4	0,078	50,6	0,542	77,3	0,92	73,4	0,89	73,6	0,878	69,9	0,836	69,7	0,848
155	29,86	0,38	24,73	0,3	32,1	0,54	25	0,46	6,1	0,113	65,8	0,873	104	1,526	96,9	1,446	98,9	1,446	93,8	1,366	91,8	1,366
175	46,3	0,73	37,7	0,55	46,9	0,97	35,7	0,81	9,3	0,215	101,9	1,675	158,1	2,86	146,9	2,7	149,5	2,68	140,9	2,5	138,3	2,52
190	59,9	1,14	47,7	0,88	59,9	1,53	47	1,32	11	0,3	130,8	2,58	201,7	4,41	188,8	4,2	189,5	4,15	177,3	3,89	176,6	3,94
205	74	1,63	57	1,21	85	2,36	64	1,98	15,3	0,48	163,3	3,74	263,6	6,58	242,6	6,2	246,6	6,16	229,6	5,74	225,6	5,78

Note
Values for hubs refer to maximum bore execution. Values for disc packs include bolts.

Disc pack executions

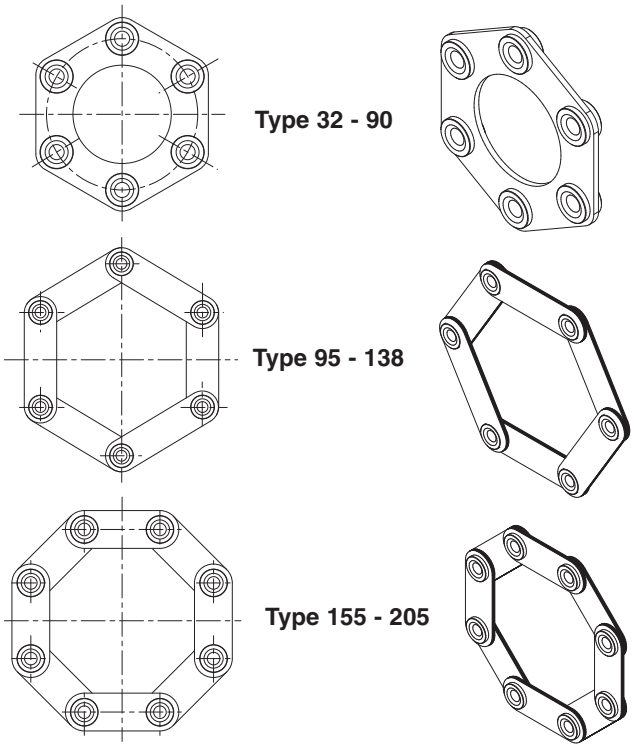

Installation and maintenance

METALDRIVE® couplings come standard unassembled (unless ordered to be assembled).

When mounting the coupling, it is important to follow the specific recommendations.
Due to the modular design of the METALDRIVE® coupling, single parts can be replaced. For optimum performance all components must be in perfect conditions.

METALDRIVE® couplings are designed for horizontal mounting. In case of vertical mounting, the coupling weight must be supported.

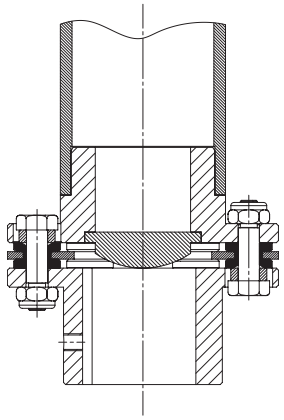

Metaldrive® with vertical assembling

- Carefully clean bores, shaft ends and the flange where the screws are positioned
- Position the hubs on the shafts of the machines. Hub faces must be flush with shaft end. Introduce setscrew and tighten properly
- Position the driver and driven unit to be connected
- Carefully align the shafts to be connected. Proper initial alignment allows misalignments during motion and ensures transmission durability. It is therefore suggested to check shaft alignments with an indicator before the machine start up.
- Mount the disc pack with screws and nuts. Tighten to torque M_S holding the screws and turning the nuts.
- Install the spacer between the hubs and connect it to the already assembled disc pack with screws and nuts (in case of long spacer, it is important to support the spacer). Tighten to torque M_s holding the screws still and turning the nuts
- Check shaft alignment again.

In case hubs are machined by the user, it is recommended to ask for correct concentricity and perpendicularity tolerances which could affect coupling life.

There is no need for lubrication.

Safety norms

All rotating parts must be protected against any possibility of contact with people.
Protection must be designed so that even in case of coupling failure, personnel and equipment is protected.

SITEX® ST Couplings

SITEX® ST

Contents

SITEX® ST couplings

Description

SITEX® ST couplings are fully manufactured in high quality steel. They are made of 1 or 2 geared hubs which are coupled with one sleeve through which the torque is transmitted.
The special **OPTIGEAR** profile allows very high torque transmission and the compensation of axial, angular and radial misalignment (only in the version with 2 hubs). The maximum recommended working temperature is -10 °C a + 80 °C.
For special applications special materials should be used. Please contact our technical department for information.

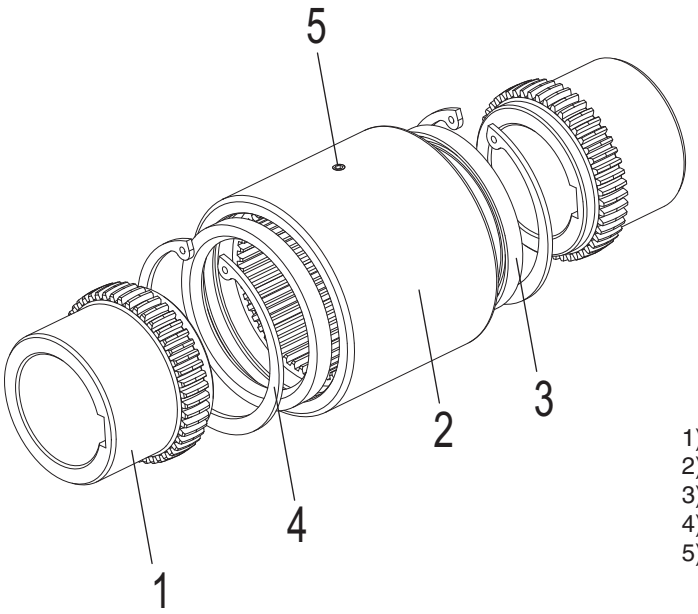

1) hub
2) sleeve
3) seal
4) snap ring
5) grease nipple

Features

With the special design of the **OPTIGEAR** crown, the contact surface area under misalignment is larger than conventional crown. Therefore, the surface stresses are reduced resulting in a longer coupling life. Therefore, backlash is reduced to a minimum, reducing impact load in reverse application, and allow optimum torque transmission and low vibration. All this results in an improved machine design.

OPTIGEAR profile
SITEX® ST couplings are machined with the unique OPTIGEAR profile, allows backlash reduced to a minimum reducing impact load in reverse applications and allow optimum torque transmission and low vibration. The machine design is then optimized by using the most compact solution in coupling.

Interchangeability
The range GST CF “A-B-C” conforms to AGMA specification in flange dimensions, type and positions of the screws. They are, therefore, interchangeable with any other AGMA coupling half.

The most compact solution
Due to the exceptional torque transmission capability, SITEX® ST couplings are the most compact solution in weight and dimensions for a safe torque transmission.

Special executions
Special executions are available for any application need. Accurate finite element analysis can be made for special high demanding applications.

Corrosion protection
SITEX® ST couplings are protected against corrosion with a special surface treatment. Mounting and dismounting are, therefore, guaranteed even after many years of use in difficult environment conditions.

SITEX® ST executions

GST type C
Standard type with 2 hubs and one sleeve. Allows for axial, angular, and radial misalignment. Long hub version also available. Offers compact, powerful design, and easy assembly.

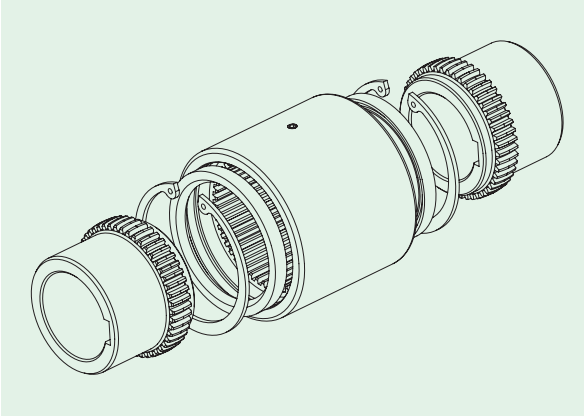

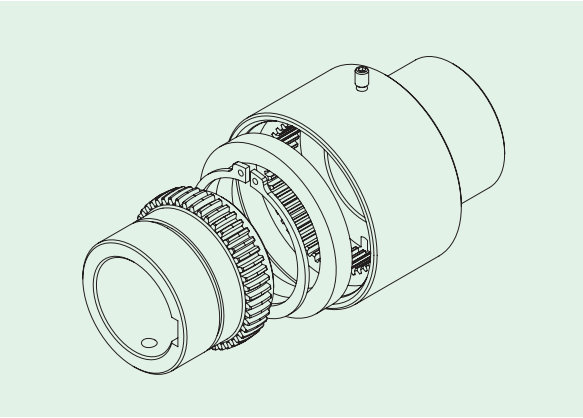

GST type CV
Standard type made of a single hub and one sleeve. It is also available in long hub execution. Offers an economical solution to an application without radial misalignment.

GST type CF
Flanged type made of 2 semi couplings.
Flanges dimensions are according to AGMA standards (type A-B-C).
They will fit any AGMA standard half.

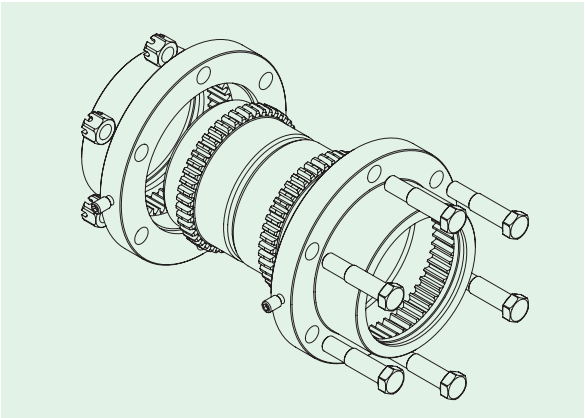

SITEX® ST type “C”

Standard type with 2 hubs and one sleeve. Allows for axial, angular and radial misalignment. Long hub version is also available. Offers compact, powerful design, and easy assembly. Maximum bore in the table is valid for keyway seat DIN 6885/1.

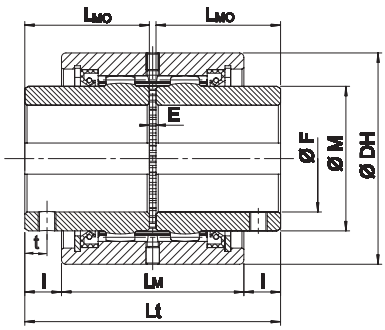

Type 1

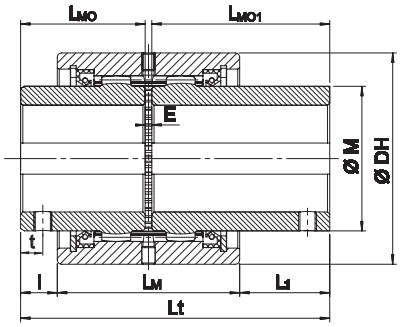

Type 2

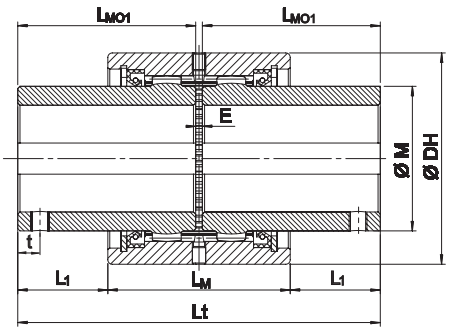

Type 3

Size	Dimensions [mm]												
	DH	E	F_{max}	M	LM	l	L_{MO}	L1	L_{MO1}	t	L_t		
											Type 1	Type 2	Type 3
28	70	3	28	40	61	12	41	31	60	14	85	104	123
38	85	3	38	55	65	17,5	48,5	49	80	14	100	131,5	163
48	95	3	48	65	82	16,5	56	40,5	80	14	115	139	163
62	120	4	62	85	90	25	68	57	100	14	140	172	204
82	145	4	82	110	96	28,5	74,5	73,5	119,5	14	153	198	243
98	175	5	98	130	113	28,5	82,5	86,0	140	14	170	227,5	285
110	198	6	110	150	130	43	105	112,5	174,5	14	216	285,5	355
133	230	8	133	180	175	56,5	140	124	207,5	14	288	355,5	423
155	270	10	155	210	214	58	160	123	225	14	330	395	460
170	300	10	170	230	240	65	180	130	245	14	370	435	500

Size	Technical data						
	Torque [Nm]		n_{max} [min^{-1}]	ΔK_r [mm]	ΔK_w* [°]	Coupling**	
	T_{KN}	T_{Kmax}				Momento of inertia $x10^{-4}$ kg . m^2	W [kg]
28	600	1200	7700	0,13	2 x 1°	9,8	1,4
38	850	1700	5800	0,13	2 x 1°	22,7	2,2
48	1300	2600	5100	0,22	2 x 1°	43	3,1
62	2200	4400	4000	0,22	2 x 1°	124	5,7
82	3800	7600	3200	0,24	2 x 1°	285	8,8
98	7000	14000	2750	0,39	2 x 1°	693	14,6
110	10000	20000	2300	0,48	2 x 1°	1327	23,3
133	15000	30000	2000	0,79	2 x 1°	3260	39,7
155	24000	48000	1650	1,05	2 x 1°	7606	66,5
170	34000	68000	1550	1,31	2 x 1°	13235	94,0

* = maximum static misalignment for a correct mounting

** = considering maximum bore

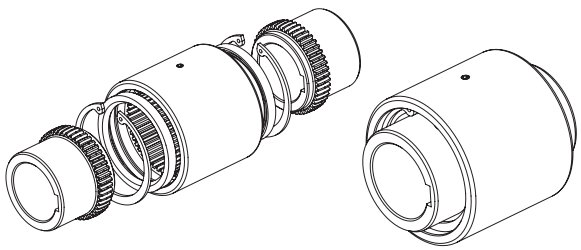

Floating shaft designs and special executions are available upon request

T_{KN}	Coupling nominal torque	Nm
T_{Kmax}	Coupling maximum torque	Nm
n_{max}	Maximum rpm	min^{-1}
ΔK_r	Maximum radial misalignment	mm
ΔK_w	Maximum angular misalignment	°
W	Weight	kg

Order form

Hubs			
GST	**082**	**M**	**F40**
Sitex ST	Size	M: Std hub	Bore [mm]
		ML: Long hub	

Sleeve		
GST	**082**	**AD**
Sitex ST C execution	Size	AD: std sleeve

SITEX® ST type “CV”

Standard type made of a single hub and one sleeve. It is also available in long hub execution. Offers an economical solution in applications without radial misalignment.
Maximum bore in the table is valid for keyway seat DIN 6885/1.

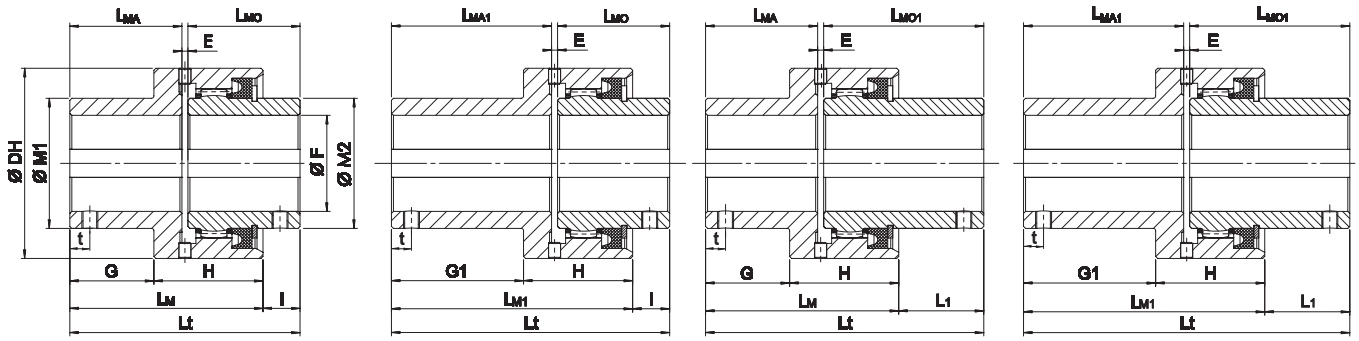

Type 1 Type 2 Type 3 Type 4

Size	Dimensions [mm]														
	DH	E	F_{max}	H	M1	M2	I	L_{MO}	L1	L_{MO1}	G	L_{MA}	G1	L_{MA1}	t
28	70	3	28	43	42	40	13	41	32	60	29	41	48	60	14
38	85	3	38	49	55	55	16	48,5	47,5	80	35	48,5	66,5	80	14
48	95	3	48	54,5	65	65	18,5	56	42,5	80	42	56	66	80	14
62	120	4	62	60	85	85	27	68	59	100	45	60	85	100	14
82	145	4	82	63	110	110	31	74,5	76	119,5	46	61,5	104	119,5	14
98	175	5	98	76	130	130	26	82,5	83,5	140	51	65,5	123,5	138	14
110	198	6	110	92	150	150	38	105	107,5	174,5	71	90	143	162	14

Size	Technical data					
	Torque [Nm]		n_{max} [min^{-1}]	ΔK_W* [°]	Coupling**	
	T_{KN}	T_{Kmax}			Momento of inertia $x10^{-4}$ kg . m^2	W [kg]
28	600	1200	7700	1°	7,1	1,1
38	850	1700	5800	1°	17,9	1,9
48	1300	2600	5100	1°	31,5	2,5
62	2200	4400	4000	1°	95	4,7
82	3800	7600	3200	1°	212	6,9
98	7000	14000	2750	1°	511	11,2
110	10000	20000	2300	1°	1080	19

* = maximum static misalignment for a correct mounting
** = considering maximum bore

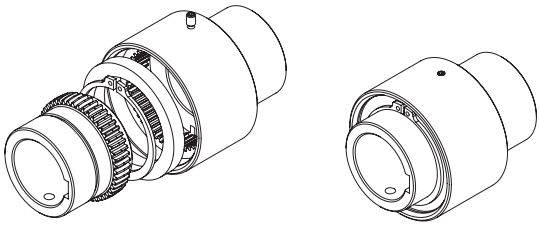

T_{KN}	Coupling nominal torque	Nm
T_{Kmax}	Coupling maximum torque	Nm
n_{max}	Maximum rpm	min^{-1}
ΔK_r	Maximum radial misalignment	mm
ΔK_w	Maximum angular misalignment	°
W	Weight	kg

Order form

Hub			
GST	**082**	**M**	**F40**
Sitex ST	Size	M: Std hub ML: Long hub	Bore [mm]

Sleeve			
GSTV	**082**	**AD**	**F40**
Sitex ST CV execution	Size	AD: std hub-sleeve ADL: long hub-sleeve	Bore [mm]

SITEX® ST type “CF” A-B-C (AGMA)

STCF A-B-C range conforms to AGMA specifications with regard to flange dimensions, type, and positions of the screws.

They are interchangeable with any AGMA coupling half.

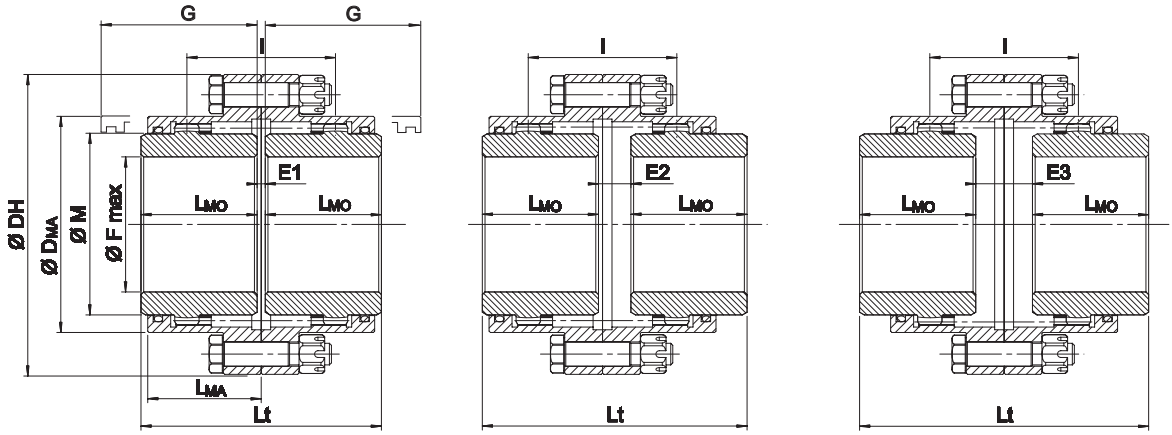

Type A Type B Type C

Size	Dimensions [mm]																Technical data						
	F_{max} [mm]	DH	D_{MA}	M	L_{MO}	L_{MA}	G*	Type A			Type B			Type C			Torque [Nm]		n_{max} [min^{-1}]	ΔK_w [°]	ΔK_r [mm]	Type A**	
								I	Lt	E_1	I	Lt	E_2	I	Lt	E_3	T_{KN}	T_{Kmax}				Moment of inertia $x10^{-4}$ kg • m^2	W [kg]
48	48	117	83	65	43	42	74	55	89	3	55	98	12	55	107	21	1300	2600	5100	2 x 0,5°	0,48	53	3,1
62	62	152	107	85	50	48	84	59	103	3	59	109	9	59	115	15	2200	4400	4000	2 x 0,5°	0,51	193	6,6
82	82	178	129,5	110	62	59	104	79	127	3	79	141	17	79	155	31	3800	7600	3200	2 x 0,5°	0,69	423	10,6
98	98	213	156	130	76	69	123	93	157	5	93	169	17	93	181	29	7000	14000	2750	2 x 0,5°	0,81	1009	17,5
110	110	240	181	150	90	82	148	109	185	5	109	199	19	109	213	33	10000	20000	2300	2 x 0,5°	0,95	1822	25,3
133	133	280	211	180	105	98	172	128	216	6	128	233	23	128	250	40	15000	30000	2000	2 x 0,5°	1,12	4257	42,5
155	155	318	249,5	210	120	107	192	144	246	6	144	264	24	144	282	42	24000	48000	1650	2 x 0,5°	1,26	7920	61,4
170	170	347	274	230	135	120	216	164	278	8	164	299	29	164	320	50	34000	68000	1550	2 x 0,5°	1,43	11132	75,6

* = maximum static misalignment for a correct mounting

** = considering maximum bore

Maximum static misalignment for a correct mounting ΔK_w = 2 x 1°

Floating shaft designs and special executions are available upon request

T_{KN}	Coupling nominal torque	Nm
T_{Kmax}	Coupling maximum torque	Nm
n_{max}	Maximum rpm	min^{-1}
ΔK_r	Maximum radial misalignment	mm
ΔK_w	Maximum angular misalignment	°
W	Weight	kg

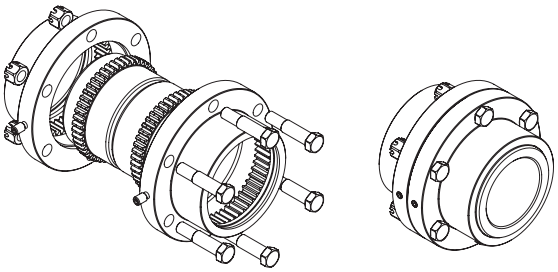

Special execution with intermediate shaft

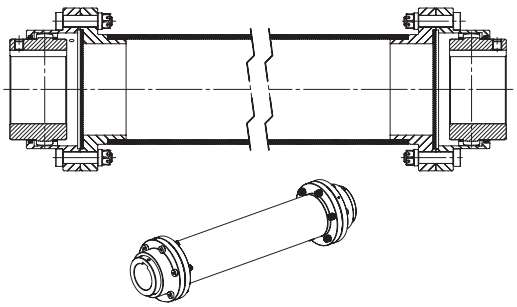

Order form

Hubs (2 pcs for coupling)				
GST	**F**	**082**	**M**	**F40**
Sitex ST	CF Execution	Size	Hub	Bore [mm]

Flanges (2 pcs for coupling)			
GST	**F**	**082**	**AD**
Sitex ST	CF Execution	Size	Flange

Set of screw (1 kit for coupling)			
GST	**F**	**082**	**KIT**
Sitex ST	CF Execution	Size	set of screws

SITEX® ST type “CF” D-E-F

Double-cardanic crowned gear coupling. Allows for axial, angular, and radial shaft misalignment.

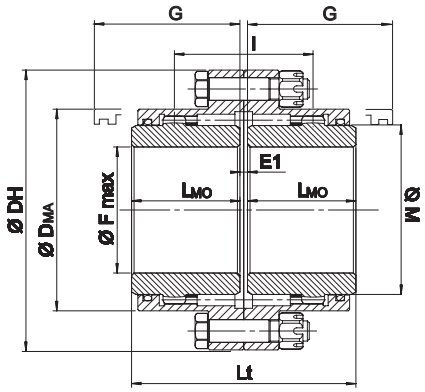

Type D

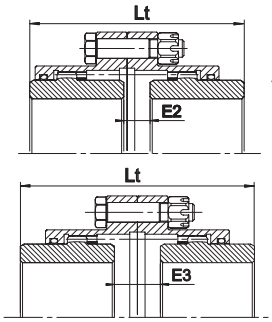

Type E

Type F

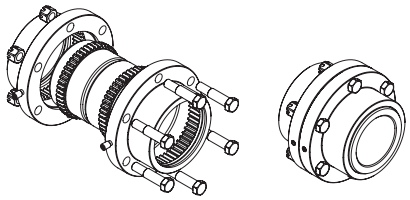

Size	Dimensions [mm]												Technical data					
	F_{max} [mm]	DH	D_{MA}	M	L_{MO}	*G	Type D		Type E		Type F		Torque [Nm]		n_{max} [min^{-1}]	ΔK_W [°]	**Moment of inertia $x10^{-4}$ kg • m^2	**W [kg]
							Lt	E_1	Lt	E_2	Lt	E_3	T_{KN}	T_{Kmax}				
50	50	111	82,5	69	43	58	89	3	91	5	93	7	1800	4200	6000	2 x 0,5°	50	4
60	60	142	104,5	85	50	68	103	3	108	8	113	13	2700	6400	4620	2 x 0,5°	120	8
75	75	168	130,5	107	62	87	127	3	138	14	149	25	5500	13000	4140	2 x 0,5°	320	13
95	95	200	158,5	133	76	95	157	5	164	12	171	19	8600	21000	4000	2 x 0,5°	850	26
110	110	225	183,5	152	90	120	185	5	204	24	223	43	13500	34000	3860	2 x 0,5°	1620	37
130	130	265	211,5	178	105	130	216	6	237	27	258	48	22200	54000	3720	2 x 0,5°	3760	59
155	155	300	245,5	209	120	135	246	6	272	32	298	58	34200	83000	3190	2 x 0,5°	7280	91
170	170	330	275	234	135	155	278	8	307	37	336	66	43500	101000	2900	2 x 0,5°	12260	123
190	190	370	307	254	150	195	308	8	350	50	392	92	69200	156000	2570	2 x 0,5°	20990	170
210	210	406	335	279	175	220	358	8	403	53	448	98	82500	196000	2330	2 x 0,5°	34010	234
230	230	438	367	305	190	236	388	8	438	58	488	108	150500	349000	2150	2 x 0,5°	50520	295
280	280	505	423	355	220	273	450	10	512	72	574	134	198200	480000	1800	2 x 0,5°	103200	455
325	325	580	475	400	250	-	512	12	-	-	-	-	275000	551000	1200	2 x 0,5°	206000	685
370	370	630	520	450	275	-	562	12	-	-	-	-	381000	762000	980	2 x 0,5°	335000	920
400	400	700	556	490	305	-	622	12	-	-	-	-	492000	984000	900	2 x 0,5°	533000	1210
430	430	760	615	550	330	-	672	12	-	-	-	-	658000	1315000	800	2 x 0,5°	835000	1590
475	475	825	680	580	355	-	722	12	-	-	-	-	835000	1669000	700	2 x 0,5°	128400	2060

* = required space to align the coupling or replace the sealing ring
** = considering hub without bore

Maximum static misalignment for a correct mounting ΔK_W = 2 x 1°
Seal flange sizes from 325 to 475

T_{KN}	Coupling nominal torque	Nm
T_{Kmax}	Coupling maximum torque	Nm
n_{max}	Maximum rpm	min^{-1}
ΔK_w	Maximum angular misalignment	°
W	Weight	kg

Order form

Coupling — GST FD 75 F40 L F50

- GST: SITEX® ST coupling
- “CF” execution type D
- Size
- F...: hub bore 1 end execution (mm)
- L: long hub
- F...: hub bore 2 end execution (mm)

Special execution with intermediate shaft

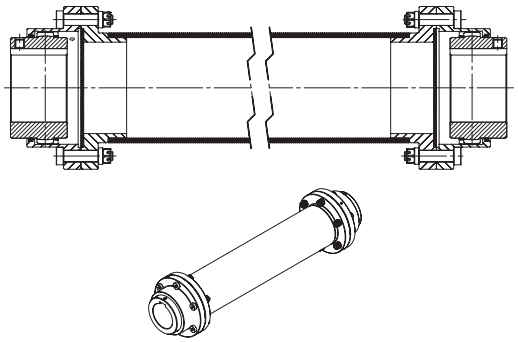

Coupling selection

1) Select the coupling according to the largest shaft diameter
2) Calculate the nominal torque T_N to be transmitted:

$$T_N = \frac{9550 \cdot P}{n} \quad [Nm]$$

With P = nominal power installed (kW), n = rpm in the drive (1/min)
3) Select the correct service factors k_1 and k_2
4) Verify the nominal torque of the coupling is greater than the corrected machine nominal torque:

$$T_{kn} \geq T_N \cdot k_1 \cdot k_2$$

With k_1 application service factor and k_2 angular misalignment (per hub) service factor

5) Verify the machine peak or starting torque Ts is lower than the coupling maximum torque T_{kmax}
6) Verify the maximum misalignments are respected.
7) Verify the hub shaft connection could bear the transmission peak torque. If necessary change the hub shaft connection type.
8) Verify the maximum RPM of the coupling is respected.

Application service factor k_1

Load type	Type of service	Application driven machine	Driver machine		
			Electric motors or turbines	Hydraulic motors, gears drivers	Reciprocating engine Electric motors frequent starts
UNIFORM	Continuous duty without overloads, occasional starts up	Electrical generators Centrifugal pumps and compressors Light fans, escalators, belt and chain conveyors	1	1,25	1,5
LIGHT peak torque	Continuous duty with light overloads and shocks for a short time and not frequent	Multistage centrifugal blowers, Steel wire machine Reciprocating pumps, Large fansAgitators (liquids) Machine tools main drive Conveyor and elevators not uniform loaded	1,4	1,75	2
MEDIUM peak torque	Intermittent duty with frequent light shocks, medium overloads (short time)	Reciprocating compressors and pumps Cranes, Agitators (solids) Hoisting equipment, Calenders for rubber or plastic Winding machine (paper industry)	1,75	2	2,5
HEAVY peak torque	Duty with very high and frequent shocks, frequent load reversal	Laundry machines, Mixers for rubber and plastic Road and rail machines/equipment, Cranes (heavy duty) Pulp grinders and refiners, paper presses Marine drives, mine fans, Wire drawing, Metal mills drives Heavy duty drives in steel mills, Hammer mills, rubber and plastic mills Stone crushers	2	2,5	3

Service factor k_2 for angular misalignment

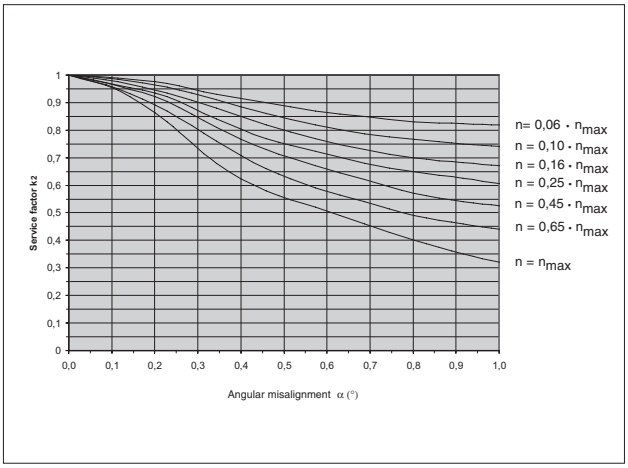

SITEX® ST

Installation and maintenance

Good alignment of the shafts help to reduce reaction forces on shafts and bearing and is important for the coupling life.
In case the hubs are machined by the user in order to adapt them to the machine, it is user responsibility:

- to control all parameters regarding balancing, bore concentricity and any other parameter which may affect coupling life and a safe transmission, are respected.
- to verify the hub length and corresponding keyway seat are compatible with the necessary toque transmission considering the peak loads. Maximum bore diameters allowed in hubs as described in dimensional tables.
- to verify the hub material is adequate for the clamping system.

During compensation of misalignments, axial forces are generated. These forces must be considered when sizing machine bearing. For a calculation, please consult our technical office.
It is also recommended that hubs are axially secured in order to avoid axial forces on the seals which may cause lubricant leakage and, therefore, shorter coupling life.
It is recommended to secure the set screw with Loctite, use an end plate, or interference fit.

Warning
Gear couplings are rotating parts and potentially dangerous. It is recommended to protect the rotating parts and comply with existing safety regulations in order to keep personnel and equipment safe.

Mounting
SITEX® ST couplings must stored in a non-corrosive environment prior to installation.
In case of environment with high humidity it is the user's, responsibility to protect the couplings, or to ask for a special surface treatment.

Prior to starting the mounting operation, it is recommended to:

- verify there are no missing or damaged components
- have the necessary mounting instructions and tools required for mounting and shaft alignment.
- make sure the machine is shut down and there is no risk of accidental start up
- be careful in handling the coupling components. Particular care should be taken with the geared crown

1) Check all components to be assembled are clean.

2) Position one snap ring and one seal on every shaft.

3) Position the hubs on the respective shafts. If necessary in order to facilitate the mounting operation, it is possible to heat the hubs (max 120°C). In such cases avoid contact between hub and seal until room temperature is reached.
For a safe mounting hub must be positioned flush with the shaft. Mount the set screws and tighten properly. In order to avoid accidental screws loosening due to vibration, use some Loctite glue.

4) Mount the sleeve on the longer shaft.

5) Position the units to be connected respecting the dimension "E" between the shafts.

6) Align the 2 shafts being careful that the catalogue values are respected. It is possible to use the SIT LINE-LASER to facilitate the operation.

7) Couplings are delivered without lubricant. Lightly grease the geared parts of hubs and sleeve. Lightly lubricate the seal and position them on the respective hubs.

8) Position the sleeve on the hubs. Insert the seals and the snap rings on the proper groove.

9) Remove the grease nipple and properly fill the chamber with grease. For the CF type, repeat the operation on the second half coupling. Position the grease nipple and tighten properly.
Inspect and maintain.

It is recommended to make a regular inspection which may detect abnormal noise, vibration, or leakage.

Every 5.000 hours, or once a year, remove grease nipples, position the coupling with one nipple at 45° with respect to the rotation axis, force grease from the bottom hole until clean grease flows. Reinsert the nipples and tighten properly.
Every 10.000 hours or every 2 years, remove snap rings and seals, clean and inspect seals and geared parts, verify alignments and mount the coupling. Low viscosity oil may be used to clean the coupling from used grease.

Recommended lubricants
Coupling lubrication is important for a long coupling duration.

1. Standard speed and load

Agip GR MV/EP 1
Amoco coupling grease
API: API grease PGX-0
Caltex Coupling Grease
Castrol Impervia MDX
Chevron Polyurea grease EP0
Esso Fibrax 370
Fina Marson EPL 1
Kübler Klüberplex GE 11-680
IP: ATHESIA-EPO
Mobil Mobilux EP0, Mobilgrease XTC
Q8 Rembrandt EP0
Shell Alvania grease EP R-0 or EP 1 Albida GC
Texaco Coupling Grease
Total Specis EPG
Tribol 3020/1000-1
Unirex RS 460, Pen-0- Led EP

2. High speed (> 50 m/s), high loads

Caltex Coupling Grease
Klüber Klüberplex GE 11-680
Mobil Mobilgrease XTC
Shell Albida GC1

SIT-LOCK® Self Locking Elements

Contents

SIT-LOCK® self locking elements

Advantages of SIT-LOCK® on the shaft-hub connection compared with traditional systems

Easy assembly and disassembly
Both actions take place by locking and unlocking the clamping screws with common tools.
The use of a torque wrench is only necessary when a more precise torque is required.

Superior holding power
The action of the clamping cones creates shaft clamping torque superior to a normal keyed hub.

Overload protection
When the pre-set torque is exceeded SIT-LOCK® will slip, preventing the connected elements from being broken.
Note: SIT-LOCK® units are not friction couplings so, excessive slip will cause damage.

Easy adjustment
Combining the SIT-LOCK® design of smooth cone action with superior holding power, the hub can be clamped at any position along a shaft, eliminating the need for lock washers, spacers, stop rings, etc.

Precision location
With the SIT-LOCK® smooth cone action, the SIT-LOCK® is ideal for clamping cams, timing devices, and indexing mechanisms accurately and precisely.

Temperature
-20 °C ÷ 150 °C

Unlimited use possibilities
SIT-LOCK® units are suitable to connect any type of hub (flywheels, chainwheels, gears, levers, pulleys, eccentrics, coupling, etc).

Various solutions in stock
Available in stock in 10 different types, SIT-LOCK® units can be utilized in a varied range of industrial applications

Order form

SIT-LOCK®	CAL	1	F25	/50

- CAL: SIT-LOCK® self locking element
- Type
- Shaft diameter
- External diameter (hub bore)

Performances

Given values of transmissible torque, axial force, and pressure between shaft and hub are valid for a lubricated installation (friction coefficient μ=0,12). Both hub and shaft, as well as locking unit's contact surfaces and screws, should be lubricated.

Locking unit and screws are supplied already oiled.

Always consider tolerances and roughness values per single locking unit.

To avoid decrease of locking unit performances, do not use molybdenum disulfide lubricant or other substances that drastically reduce coefficient of friction.

Design procedure

For a correct functioning of SIT-LOCK®, the transmissible torque M_T (stated in this catalogue) must always exceed the maximum torque in operation. So, in selecting the SIT-LOCK® dimensions, you must consider the start up torque could be even 4 times larger than the nominal one.
The transmissible axial forces (F_{ax}) given in the tables are valid for cases where there is no torque. If it is necessary to transmit both a torque and an axial force (ex. helical gear), the following formula must be used:

$$M_T \geq \sqrt{M_a^2 + \left(\frac{F_{ax} \cdot d}{2000}\right)^2} \quad [Nm]$$

where:
M_a = maximum torque to be transmitted [Nm]
F_{ax} = axial force in operation [N]
d = shaft diameter [mm]

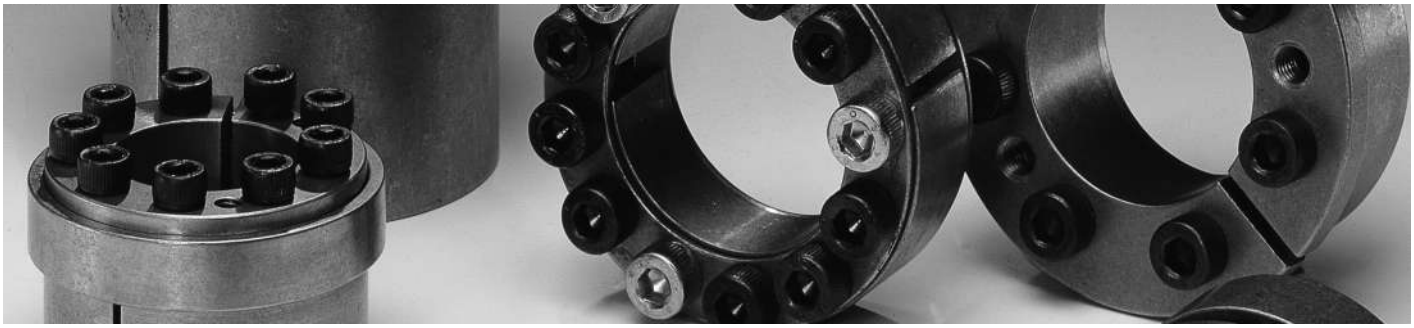

SIT-LOCK® 1 - Not Self-Centering

SITLOCK® locking assembly unit consists of four pieces with two inside double-cone rings joined through a set of tightening screws. It is recommended for medium torques. Although it is not self centering, it can be easily assembled and disassembled.

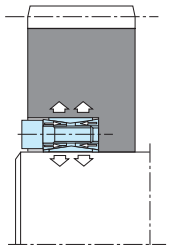

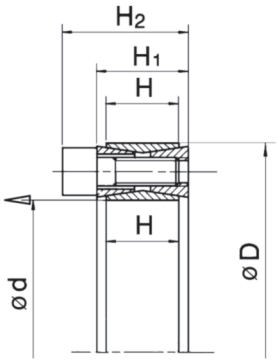

Installation

Carefully clean contact surfaces of shaft and hub. Then, lightly oil both surfaces with standard mineral oil. Position the SIT-LOCK® on the shaft and into the hub machined bore. Align them as required by the application. Gradually and uniformly tighten the locking screws to the tightening torque (Ms).

You must tighten the screws in diametrically opposite sequence in stages:

- hand tighten the screws until the surfaces are in contact
- check the position of the hub on the shaft
- tighten the screws to half the value of the tightening torque (Ms) stated in the catalogue
- repeat the operation until the tightening torque is reached using the dynamometric screw-driver
- check every locking screw to insure it has been tightened to the specific tightening torque

Do not use lubricant like "Molykote" or molybdenum disulfide based oils.

Removal

SIT-LOCK® 1 are not self-locking. The inner rings are tapered so that they spring apart when all screws are released.
Gradually loosen opposite locking screws in stages until the SIT-LOCK® is released. DO NOT remove the screws completely. In case it should jam, it is necessary to lightly hammer the released screws, so the back cone ring is pushed backwards.

Note: To reuse the locking element, carefully oil the screws and the tapered surfaces, then follow installation instructions.

Percentering hub selection

In order to perform an accurate centering, it is necessary to machine with accuracy a precentering hub section which should be longer than ≥ di 2 x H_2.

Axial displacement

During the Installation of the unit no axial displacement of the hubs on the shaft occurs.

Maximum allowable roughness
Rt 16 µm
Maximum recommended tolerance
shaft h 11 - hub H 11

Calculation of (M_T) with more SIT-LOCK® 1	
1 unit	M_T = M_T table
2 units	M_T = M_T table x 1,9
3 units	M_T = M_T table x 2,7
4 units	M_T = M_T table x 3,55

SIT-LOCK® 1

Dimensions [mm]				Performances		Pressure [N/mm²]		Clamping screws (DIN 912 - 12,9)		
d x D	H	H_1	H_2	M_T [Nm]	F_{ax} [kN]	p_w	p_n	N°	Type	M_s [Nm]
20 x 47	17	20	26	288	29	225	96	8	M 6	15
22 x 47	17	20	26	317	29	204	96	8	M 6	15
24 x 50	17	20	26	345	29	187	90	8	M 6	15
25 x 50	17	20	26	360	29	180	90	8	M 6	15
28 x 55	17	20	26	498	36	198	101	10	M 6	15
30 x 55	17	20	26	533	36	185	101	10	M 6	15
32 x 60	17	20	26	676	42	206	110	12	M 6	15
35 x 60	17	20	26	739	42	188	110	12	M 6	15
38 x 65	17	20	26	928	49	201	117	14	M 6	15
40 x 65	17	20	26	977	49	190	117	14	M 6	15
42 x 75	20	24	32	1.587	76	239	134	12	M 8	37
45 x 75	20	24	32	1.701	76	223	134	12	M 8	37
48 x 80	20	24	32	1.814	76	209	125	12	M 8	37
50 x 80	20	24	32	1.889	76	200	125	12	M 8	37
55 x 85	20	24	32	2.397	87	210	136	14	M 8	37
60 x 90	20	24	32	2.615	87	193	128	14	M 8	37
65 x 95	20	24	32	3.204	99	201	138	16	M 8	37
70 x 110	24	28	38	4.589	131	207	132	14	M10	70
75 x 115	24	28	38	4.917	131	193	126	14	M10	70
80 x 120	24	28	38	5.245	131	181	121	14	M10	70
85 x 125	24	28	38	6.290	148	192	131	16	M10	70
90 x 130	24	28	38	6.660	148	182	126	16	M10	70
95 x 135	24	28	38	7.819	165	192	135	18	M10	70
100 x 145	26	33	45	9.703	194	198	137	14	M12	127
110 x 155	26	33	45	10.673	194	180	128	14	M12	127
120 x 165	26	33	45	13.262	221	188	137	16	M12	127
130 x 180	34	38	50	17.850	275	165	119	20	M12	127
140 x 190	34	38	50	21.089	301	168	124	22	M12	127
150 x 200	34	38	50	24.586	328	171	128	24	M12	127
160 x 210	34	38	50	28.343	354	173	132	26	M12	127
170 x 225	38	44	58	33.541	395	162	122	22	M14	195
180 x 235	38	44	58	38.636	429	166	128	24	M14	195
190 x 250	46	52	66	47.337	498	151	115	28	M14	195
200 x 260	46	52	66	53.261	533	154	118	30	M14	195
220 x 285	50	56	72	68.790	625	151	116	26	M16	300
240 x 305	50	56	72	86.127	718	159	125	30	M16	300
260 x 325	50	56	72	105.229	809	165	132	34	M16	300
280 x 355	60	66	84	128.456	918	145	114	32	M18	410
300 x 375	60	66	84	154.066	1.027	151	121	36	M18	410
320 x 405	72	78	98	211.342	1.321	152	120	36	M20	590
340 x 425	72	78	98	224.551	1.321	143	115	36	M20	590
360 x 455	84	90	112	289.095	1.606	141	111	36	M22	790
380 x 475	84	90	112	305.156	1.606	133	107	36	M22	790
400 x 495	84	90	112	321.217	1.606	127	102	36	M22	790
420 x 515	84	90	112	372.740	1.775	133	109	40	M22	790
440 x 545	96	102	126	447.549	2.034	128	103	40	M24	1.000
460 x 565	96	102	126	467.892	2.034	122	99	40	M24	1.000
480 x 585	96	102	126	511.273	2.130	123	101	42	M24	1.000
500 x 605	96	102	126	556.488	2.226	123	102	44	M24	1.000
520 x 630	96	102	126	591.149	2.274	121	100	45	M24	1.000
540 x 650	96	102	126	613.885	2.274	116	97	45	M24	1.000
560 x 670	96	102	126	676.552	2.416	119	100	48	M24	1.000
580 x 690	96	102	126	728.173	2.511	120	101	50	M24	1.000
600 x 710	96	102	126	753.282	2.511	116	98	50	M24	1.000
620 x 730	96	102	126	807.649	2.605	116	99	52	M24	1.000
640 x 750	96	102	126	863.810	2.699	117	99	54	M24	1.000
660 x 770	96	102	126	921.758	2.793	117	100	56	M24	1.000
680 x 790	96	102	126	949.690	2.793	113	98	56	M24	1.000
700 x 810	96	102	126	1.042.991	2.980	118	102	60	M24	1.000
720 x 830	96	102	126	1.072.791	2.980	114	99	60	M24	1.000
740 x 850	96	102	126	1.136.994	3.073	115	100	62	M24	1.000
760 x 870	96	102	126	1.202.959	3.166	115	101	64	M24	1.000
780 x 890	96	102	126	1.252.660	3.212	114	100	65	M24	1.000
800 x 910	96	102	126	1.303.261	3.258	113	99	66	M24	1.000
820 x 930	96	102	126	1.373.654	3.350	113	100	68	M24	1.000
840 x 950	96	102	126	1.445.789	3.442	113	100	70	M24	1.000
860 x 970	96	102	126	1.519.663	3.534	114	101	72	M24	1.000
880 x 990	96	102	126	1.595.268	3.626	114	101	74	M24	1.000
900 x 1010	96	102	126	1.652.075	3.671	113	100	75	M24	1.000

Notes:
Dimensions representing the total length of the hub are indicative; they are calculated according to the geometric rules.

For assemblies requiring larger dimensions, contact our Technical Department.

M_S	Screw tightening torque	Nm
M_T	Transmissible torque moment	Nm
F_{ax}	Transmissible axial load	N

p_w	Shaft pressure	N/mm²
p_n	Hub pressure	N/mm²

SIT-LOCK® 2 - Not Self-Centering

Locking elements consist of one internal and one external tapered rings. They are designed to work in combination with a clamp flange which can be bolted on a hub or shaft depending on application need. The number of locking screws depends on the torque to be transmitted. SIT-LOCK® 2 requires very small axial installation dimensions. Up to 4 units can be arranged behind each other, allowing high torques to be transmitted.

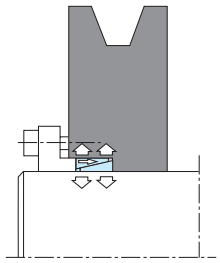

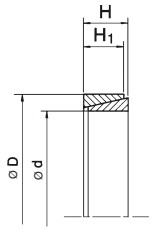

Note: SIT-LOCK® 2 in slotted execution is available upon request

$$M_T = \frac{(N°screws \cdot P_v) - P_o}{0,54} \cdot 0,12 \cdot \frac{d}{2000}$$

The values of Pv and Ms are stated in the DIN 912 table.

Note:
The values stated in this catalogue are valid for application 1 (see following page).
With applications 2, M_T, F_{ax}, p_w, p_n, are increased by 25%.

Installation

Carefully clean contact surfaces of shaft and hub. Then lightly oil both surfaces with standard mineral oil. Position the SIT-LOCK® on the shaft and into the hub machined bore. Align them as required by the application. Gradually and uniformly tighten the locking screws to the tightening torque (Ms).

You must tighten the screws in diametrically opposite sequence in stages:
- hand tighten the screws until the surfaces are in contact
- carefully check the position of the hub onto the shaft
- tighten the screws to half the value of the tightening torque (Ms) stated in the catalogue
- repeat the operation until the tightening torque is reached, using the dynamometric screw-driver
- check every locking screw to insure it has been tightened to the specific tightening torque

Make sure the clamping flange is not laying on the hub and the distance between flange and hub is equally spaced.

Do not use lubricant like "Molykote" or molybdenum disulfide based oils.

Removal

Gradually loosen opposite clamping screws in stages until the SIT-LOCK® is released. In case it should jam, it is necessary to lightly hammer the hub.

Maximum allowable roughness
Rt 6 µm
Maximum recommended tolerance
shaft h 6 - hub H7 per ∅ ≤ 40
shaft h 8 - hub H8 per ∅ ≥ 42

Calculation of (M_T) with more SIT-LOCK® 2	
1 unit	$M_T = M_T$ table
2 units	$M_T = M_T$ table x 1,55
3 units	$M_T = M_T$ table x 1,85
4 units	$M_T = M_T$ table x 2,02

SIT-LOCK® 2

Application 1

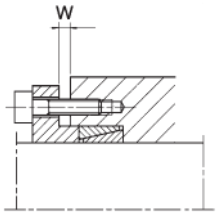

Application 2

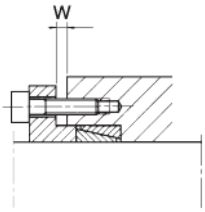

Dimensions [mm]			Axial force	Total axial force	Performances		"W" - Number of elements arranged in parallel [mm]				Pressure [N/mm²]	
d x D	H	H_1	P_0 [kN]	P_{tot} [kN]	M_T [Nm]	F_{ax} [kN]	1	2	3	4	P_w	P_n
6 x 9	4,5	3,7	-	4	3	0,9	2,5	2,5	3,0	4,0	106	71
7 x 10	4,5	3,7	-	5	4	1,1	2,5	2,5	3,0	4,0	114	80
8 x 11	4,5	3,7	-	6	5	1,3	2,5	2,5	3,0	4,0	119	87
9 x 12	4,5	3,7	8	15	7	1,6	2,5	2,5	3,0	4,0	130	98
10 x 13	4,5	3,7	7	16	10	2,0	2,5	2,5	3,0	4,0	143	110
12 x 15	4,5	3,7	7	16	12	2,0	2,5	2,5	3,0	4,0	119	96
13 x 16	4,5	3,7	7	16	14	2,1	2,5	2,5	3,0	4,0	116	95
14 x 18	6,3	5,3	11	26	23	3,3	3,5	3,5	4,5	5,5	119	93
15 x 19	6,3	5,3	11	27	27	3,6	3,5	3,5	4,5	5,5	120	95
16 x 20	6,3	5,3	10	27	30	3,8	3,5	3,5	4,5	5,5	118	95
17 x 21	6,3	5,3	10	27	33	3,9	3,5	3,5	4,5	5,5	114	92
18 x 22	6,3	5,3	9	33	48	5,3	3,5	3,5	4,5	5,5	147	121
19 x 24	6,3	5,3	13	33	43	4,6	3,5	3,5	4,5	5,5	120	95
20 x 25	6,3	5,3	12	33	47	4,7	3,5	3,5	4,5	5,5	117	93
22 x 26	6,3	5,3	9	34	61	5,6	3,5	3,5	4,5	5,5	126	107
24 x 28	6,3	5,3	8	34	68	5,7	3,5	3,5	4,5	5,5	119	102
25 x 30	6,3	5,3	10	37	75	6,0	3,5	3,5	4,5	5,5	120	100
28 x 32	6,3	5,3	8	40	101	7,2	3,5	3,5	4,5	5,5	129	113
30 x 35	6,3	5,3	9	40	105	7,0	3,5	3,5	4,5	5,5	116	100
32 x 36	6,3	5,3	8	44	128	8,0	3,5	3,5	4,5	5,5	125	112
35 x 40	7,0	6,0	10	54	171	9,8	3,5	3,5	4,5	5,5	124	108
36 x 42	7,0	6,0	12	57	181	10,1	3,5	3,5	4,5	5,5	124	106
38 x 44	7,0	6,0	11	60	207	10,9	3,5	3,5	4,5	5,5	127	109
40 x 45	8,0	6,6	14	70	249	12,5	3,5	4,5	5,5	6,5	125	111
42 x 48	8,0	6,6	16	75	278	13,2	3,5	4,5	5,5	6,5	127	111
45 x 52	10,0	8,6	28	110	409	18,2	3,5	4,5	5,5	6,5	124	108
48 x 55	10,0	8,6	25	110	455	19,0	3,5	4,5	5,5	6,5	122	106
50 x 57	10,0	8,6	24	110	480	19,2	3,5	4,5	5,5	6,5	118	104
55 x 62	10,0	8,6	22	120	601	21,8	3,5	4,5	5,5	6,5	123	109
56 x 64	12,0	10,4	30	150	750	26,8	3,5	4,5	5,5	7,0	122	107
60 x 68	12,0	10,4	28	160	883	29,4	3,5	4,5	5,5	7,0	125	110
63 x 71	12,0	10,4	27	170	1.005	31,9	3,5	4,5	5,5	7,0	129	115
65 x 73	12,0	10,4	26	170	1.044	32,1	3,5	4,5	5,5	7,0	126	112
70 x 79	14,0	12,2	31	210	1.392	39,8	3,5	5,0	6,5	7,5	124	109
71 x 80	14,0	12,2	31	220	1.491	42,0	3,5	5,0	6,5	7,5	129	114
75 x 84	14,0	12,2	35	230	1.628	43,4	3,5	5,0	6,5	7,5	126	112
80 x 91	17,0	15,0	48	300	2.240	56,0	4,0	6,0	6,5	8,0	124	109
85 x 96	17,0	15,0	46	320	2.593	61,0	4,0	6,0	6,5	8,0	127	112
90 x 101	17,0	15,0	44	330	2.864	63,6	4,0	6,0	6,5	8,0	125	111
95 x 106	17,0	15,0	41	340	3.153	66,4	4,0	6,0	6,5	8,0	124	111
100 x 114	21,0	18,7	61	460	4.433	88,7	5,0	6,0	7,0	9,0	126	110
110 x 124	21,0	18,7	66	475	4.999	90,9	5,0	6,0	7,0	9,0	117	104
120 x 134	21,0	18,7	60	475	5.529	92,2	5,0	6,0	7,0	9,0	109	98
130 x 148	28,0	25,3	96	700	8.720	134	5,0	7,0	9,0	11,0	108	95
140 x 158	28,0	25,3	89	740	10.127	145	6,0	7,0	9,0	11,0	108	96
150 x 168	28,0	25,3	85	790	11.750	157	6,0	7,0	8,0	11,0	110	98
160 x 178	28,0	25,3	79	950	15.492	194	6,0	7,0	9,0	11,0	127	114
170 x 191	33,0	30,0	117	1.180	20.071	236	7,0	9,0	10,0	12,0	123	109
180 x 201	33,0	30,0	111	1.200	21.774	242	7,0	9,0	10,0	12,0	119	106
190 x 211	33,0	30,0	105	1.300	25.228	266	7,0	9,0	10,0	12,0	124	111
200 x 224	38,0	34,8	134	1.600	32.573	326	7,0	8,0	11,0	13,0	124	111
220 x 244	38,0	34,8	142	1.700	37.185	345	7,0	9,0	11,0	13,0	124	111
320 x 360	65,0	59,0	292	3.492	113.950	710	10,0	15,0	20,0	25,0	100	100

Design of the screws center distance (l)

a) For applications with screws clamped on the hub:
l = D + 12 + ∅ screw [mm]

b) For applications with screws clamped on the shaft:
l = d – 12 – ∅ screw [mm]

Design of the flange thickness (S_f)

a) For applications with screws quality 12,9 (DIN 912):
S_f = ∅ screw x 1,8 [mm]

b) For applications with screws quality 8,8 (DIN 912):
S_f = ∅ screw x 1,3 [mm]

Note: flanges are available on request

Notes:
Dimensions representing the total length of the hub are indicative; they are calculated according to the geometric rules.

For assemblies requiring larger dimensions, contact our Technical Department.

M_S	Screw tightening torque	Nm
M_T	Transmissible torque moment	Nm
F_{ax}	Transmissible axial load	N
p_w	Shaft pressure	N/mm²
p_n	Hub pressure	N/mm²

SIT-LOCK® 3 - Self-Centering Low Profile

Locking assembly with single taper design. Consists of two tapered rings and a spacer. It has minimum overall dimensions in virtue of the reduced thickness of the cones.
SIT-LOCK® 3 is suitable for the applications where small hubs are requested. It is recommended for mid-high torques and is self centering.
During the installation of the unit no axial displacement of the hubs on the shaft occurs.

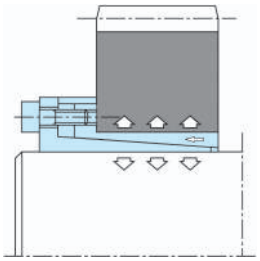

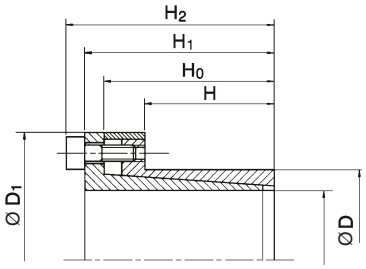

Installation

Carefully clean contact surfaces of shaft and hub. Then, lightly oil both surfaces with standard mineral oil. Position the SIT-LOCK® on the shaft and into the hub machined bore. Align them as required by the application. Gradually and uniformly tighten the locking screws to the tightening torque (Ms).

You must tighten the screws in diametrically opposite sequence in stages:

- hand tighten the screws until the surfaces are in contact
- carefully check the position of the hub on the shaft
- tighten the screws to half the value of the tightening torque (Ms) stated in the catalogue
- repeat the operation until the tightening torque is reached using the dynamometric screw-driver
- check every locking screw to insure it has been tightened to the specific tightening torque

Do not use lubricant like "Molykote" or molybdenum disulfide based oils.

Removal

Gradually loosen all locking screws. Remove and transfer the screws into the releasing tapped holes and tighten them until the SIT-LOCK® is released.

Note: To reuse the locking element, carefully oil the screws and the conical surfaces, then follow installation instructions.

Concentricity

For self-centering locking assemblies the clamping element has a centering effect and the concentricity error can be considered 0.02-0.04 mm.

Maximum allowable roughness
Rt 16 µm
Maximum recommended tolerance
shaft h 8 - hub H 8

SIT-LOCK® 3

Dimensions [mm]						Performances		Pressure [N/mm²]		Clamping screws (DIN 912 - 12,9)		
d x D	H	H_0	H_1	H_2	D_1	M_T [Nm]	F_{ax} [kN]	p_w	p_n	N°	Type	M_s [Nm]
6 x 14	10	18,5	21	24	25	12	4	180	77	3	M 3	2
7 x 15	12	22	25	29	27	26	7	234	109	3	M 4	4,9
8 x 15	12	22	25	29	27	30	7	204	109	3	M 4	4,9
9 x 16	14	23	26	30	28	44	10	208	117	4	M 4	4,9
10 x 16	14	23	26	30	28	49	10	187	117	4	M 4	4,9
11 x 18	14	23	26	30	32	54	10	170	104	4	M 4	4,9
12 x 18	14	23	26	30	32	59	10	156	104	4	M 4	4,9
13 x 23	14	23	26	30	38	64	10	144	81	4	M 4	4,9
14 x 23	14	23	26	30	38	69	10	134	81	4	M 4	4,9
15 x 24	16	29	36	42	45	128	17	189	118	3	M 6	17
16 x 24	16	29	36	42	45	136	17	177	118	3	M 6	17
17 x 26	18	31	38	44	47	193	23	197	129	4	M 6	17
18 x 26	18	31	38	44	47	205	23	186	129	4	M 6	17
19 x 27	18	31	38	44	49	216	23	176	124	4	M 6	17
20 x 28	18	31	38	44	50	227	23	168	120	4	M 6	17
22 x 32	25	38	45	51	54	250	23	110	75	4	M 6	17
24 x 34	25	38	45	51	56	273	23	101	71	4	M 6	17
25 x 34	25	38	45	51	56	284	23	97	71	4	M 6	17
28 x 39	25	38	45	51	61	478	34	129	93	6	M 6	17
30 x 41	25	38	45	51	62	512	34	121	88	6	M 6	17
32 x 43	25	38	45	51	65	546	34	113	84	6	M 6	17
35 x 47	32	45	52	58	69	796	45	108	80	8	M 6	17
38 x 50	32	45	52	58	72	864	45	99	75	8	M 6	17
40 x 53	32	45	52	58	75	910	45	94	71	8	M 6	17
42 x 55	32	45	52	58	78	955	45	90	69	8	M 6	17
45 x 59	45	62	70	78	86	1.891	84	110	84	8	M 8	41
48 x 62	45	62	70	78	87	2.017	84	103	80	8	M 8	41
50 x 65	45	62	70	78	92	2.101	84	99	76	8	M 8	41
55 x 71	55	72	80	88	98	2.600	95	83	64	9	M 8	41
60 x 77	55	72	80	88	104	2.836	95	76	59	9	M 8	41
65 x 84	55	72	80	88	111	3.073	95	70	54	9	M 8	41
70 x 90	65	86	96	106	119	5.254	150	88	68	9	M10	83
75 x 95	65	86	96	106	126	5.630	150	82	64	9	M10	83
80 x 100	65	86	96	106	131	8.006	200	102	82	12	M10	83
85 x 106	65	86	96	106	137	8.507	200	96	77	12	M10	83
90 x 112	65	86	96	106	144	9.007	200	91	73	12	M10	83
95 x 120	65	86	96	106	149	11.092	234	100	79	14	M10	83
100 x 125	65	86	96	106	154	15.012	300	123	98	18	M10	83
110 x 140	90	114	128	140	180	16.029	291	78	61	12	M12	145
120 x 155	90	114	128	140	198	17.486	291	72	55	12	M12	145
130 x 165	90	114	128	140	208	25.257	389	88	69	16	M12	145

Notes:
Dimensions representing the total length of the hub are indicative; they are calculated according to the geometric rules.

For assemblies requiring larger dimensions, contact our Technical Department.

It is possible to decrease the screws tightening torque Ms by up to 40% of the value stated in the table. Consequently, M_T, F_{ax}, P_w and P_n will decrease proportionally.

M_S	Screw tightening torque	Nm
M_T	Transmissible torque moment	Nm
F_{ax}	Transmissible axial load	N
p_w	Shaft pressure	N/mm^2
p_n	Hub pressure	N/mm^2

SIT-LOCK® 4 - Self-Centering Heavy Duty

It is suitable for high torques and is self-centering. Recommended for applications that requires high transmission values and excellent centering capabilities such as belt drums.

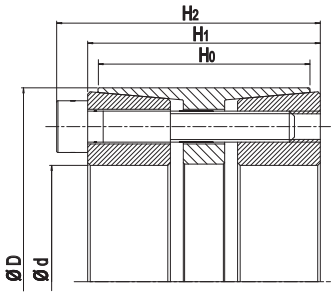

Installation

Carefully clean contact surfaces of shaft and hub. Then, lightly oil both surfaces with standard mineral oil. Position the SIT-LOCK® on the shaft and into the hub machined bore. Align them as required by the application. Gradually and uniformly tighten the locking screws to the tightening torque (Ms).

You must tighten the screws in diametrically opposite sequence in stages:

- hand tighten the screws until the surfaces are in contact
- carefully check the position of the hub on the shaft
- tighten the screws to half the value of the tightening torque (Ms) stated in the catalogue
- repeat the operation until the tightening torque is reached using the dynamometric screw-driver
- check every locking screw to insure it has been tightened to the specific tightening torque

Do not use lubricant like "Molykote" or molybdenum disulfide based oils.

Removal

Gradually loosen the clamping screws. Transfer the screws into the releasing tapped holes and tighten them until the front cone is released. Loosen the clamping screws again. Transfer the clamping screws into the releasing holes of the intermediate ring, and tighten them until the back cone is released.

Note: To reuse the locking element, carefully oil the screws and the conical surfaces, then follow installation instructions.

Concentricity

For self-centering locking assemblies, the clamping element has a centering effect and the concentricity error can be considered 0.02-0.04 mm.

Maximum allowable roughness
Rt 16 µm
Maximum recommended tolerance
shaft h 8 - hub H 8

SIT-LOCK® 4

Dimensions [mm]				Performances		Pressure [N/mm²]		Clamping screws (DIN 912 - 12,9)		
d x D	H_0	H_1	H_2	M_T [Nm]	F_{ax} [kN]	p_w	p_n	N°	Type	M_s [Nm]
25 x 50	41	45	51	830	66	172	86	6	M6	17
28 x 55	41	45	51	1.239	89	205	104	8	M6	17
30 x 55	41	45	51	1.328	89	191	104	8	M6	17
35 x 60	41	45	51	1.549	89	164	95	8	M6	17
38 x 65	41	45	51	1.682	89	151	88	8	M6	17
40 x 65	41	45	51	2.213	111	179	110	10	M6	17
42 x 75	41	45	53	3.435	164	252	141	8	M8	41
45 x 75	41	45	53	3.680	164	235	141	8	M8	41
48 x 80	58	62	70	3.926	164	156	94	8	M8	41
50 x 80	58	62	70	4.089	164	150	94	8	M8	41
55 x 85	58	62	70	4.498	164	136	88	8	M8	41
60 x 90	58	62	70	6.134	204	156	104	10	M8	41
65 x 95	58	62	70	6.645	204	144	98	10	M8	41
70 x 110	70	76	86	11.363	325	176	112	10	M10	83
75 x 115	70	76	86	12.174	325	164	107	10	M10	83
80 x 120	70	76	86	15.583	390	185	123	12	M10	83
85 x 125	70	76	86	16.557	390	174	118	12	M10	83
90 x 130	70	76	86	17.531	390	164	114	12	M10	83
95 x 135	70	76	86	18.505	390	155	109	12	M10	83
100 x 145	92	98	110	28.361	567	164	113	12	M12	145
110 x 155	92	98	110	31.197	567	149	106	12	M12	145
120 x 165	92	98	110	39.706	662	159	116	14	M12	145
130 x 180	108	114	128	50.589	778	147	106	12	M14	230
140 x 190	108	114	128	63.560	908	159	117	14	M14	230
150 x 200	108	114	128	77.829	1.038	170	127	16	M14	230
160 x 210	108	114	128	83.017	1.038	159	121	16	M14	230
170 x 225	136	146	162	107.267	1.262	145	109	14	M16	355
180 x 235	136	146	162	129.802	1.442	156	120	16	M16	355
190 x 250	136	146	162	137.014	1.442	148	113	16	M16	355
200 x 260	136	146	162	144.225	1.442	141	108	16	M16	355
220 x 285	136	146	162	198.309	1.803	160	123	20	M16	355
240 x 305	136	146	162	237.971	1.983	161	127	22	M16	355
260 x 325	136	146	162	257.802	1.983	149	119	22	M16	355
280 x 355	138	148	168	393.980	2.814	193	152	20	M20	690
300 x 375	165	177	197	464.334	3.096	166	133	22	M20	690
320 x 405	165	177	197	495.289	3.096	156	123	22	M20	690
340 x 425	165	177	197	574.085	3.377	160	128	24	M20	690
360 x 455	188	202	224	693.598	3.853	151	119	22	M22	930
380 x 475	188	202	224	865.246	4.554	169	135	26	M22	930
400 x 495	188	202	224	910.786	4.554	161	130	26	M22	930

Notes:
Dimensions representing the total length of the hub are indicative; they are calculated according to the geometric rules.

For assemblies requiring larger dimensions, contact our Technical Department.

SIT-LOCK®

M_S	Screw tightening torque	Nm
M_T	Transmissible torque moment	Nm
F_{ax}	Transmissible axial load	N
p_w	Shaft pressure	N/mm^2
p_n	Hub pressure	N/mm^2

SIT-LOCK® 5A - Self-Centering without Flange

Locking assembly with single taper design. It is suitable for high torques. Provide good concentricity and self centring. A small axial movement of the hub during the installation operation may occur. Applications in need of an accurate axial positioning are not recommended with this type of locking assembly.

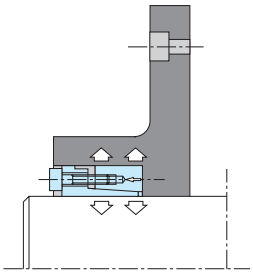

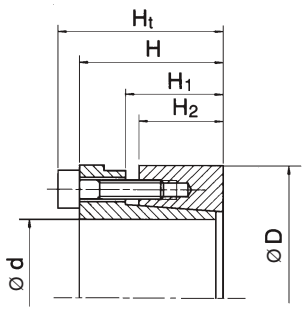

Installation

Carefully clean contact surfaces of shaft and hub. Then, lightly oil both surfaces with standard mineral oil. Position the SIT-LOCK® on the shaft and into the hub machined bore. Align them as required by the application. Gradually and uniformly tighten the locking screws to the tightening torque (Ms).

You must tighten the screws in diametrically opposite sequence in stages:

- hand tighten the screws until the surfaces are in contact
- carefully check the position of the hub on the shaft
- tighten the screws to half the value of the tightening torque (Ms) stated in the catalogue
- repeat the operation until the tightening torque is reached using the dynamometric screw-driver
- check every locking screw to insure it has been tightened to the specific tightening torque

Do not use lubricant like "Molykote" or molybdenum disulfide based oils.

Removal

Gradually loosen all locking screws. Remove and transfer the screws into the releasing tapped holes and tighten them until the SIT-LOCK® is released.

Note: To reuse the locking element, carefully oil the screws and the conical surfaces, then follow installation instructions.

Concentricity

For self-centering locking assemblies the clamping element has a centering effect and the concentricity error can be considered 0.02-0.04 mm.

Maximum allowable roughness
Rt 16 µm
Maximum recommended tolerance
shaft h 8 - hub H 8

SIT-LOCK® 5A

Dimensions [mm]					Performances		Pressure [N/mm²]		Clamping screws (DIN 912 - 12,9)		
d x D	H_t	H	H_1	H_2	M_T [Nm]	F_{ax} [kN]	p_w	p_n	N°	Type	M_s [Nm]
20 x 47	49	43	30	26	547	55	279	119	6	M6	17
22 x 47	49	43	30	26	602	55	254	119	6	M6	17
24 x 50	49	43	30	26	657	55	233	112	6	M6	17
25 x 50	49	43	30	26	684	55	223	112	6	M6	17
28 x 55	49	43	30	26	766	55	199	101	6	M6	17
30 x 55	49	43	30	26	821	55	186	101	6	M6	17
32 x 60	49	43	30	26	1.313	82	262	140	9	M6	17
35 x 60	49	43	30	26	1.436	82	239	140	9	M6	17
38 x 65	49	43	30	26	1.559	82	220	129	9	M6	17
40 x 65	49	43	30	26	1.641	82	209	129	9	M6	17
42 x 75	60	52	35	30	2.123	101	213	119	6	M8	41
45 x 75	60	52	35	30	2.275	101	199	119	6	M8	41
48 x 80	60	52	35	30	2.426	101	186	112	6	M8	41
50 x 80	60	52	35	30	2.527	101	179	112	6	M8	41
55 x 85	60	52	35	30	4.170	152	244	158	9	M8	41
60 x 90	60	52	35	30	4.549	152	223	149	9	M8	41
65 x 95	60	52	35	30	4.928	152	206	141	9	M8	41
70 x 110	67	57	46	40	6.555	187	177	113	7	M10	83
75 x 115	67	57	46	40	7.023	187	166	108	7	M10	83
80 x 120	67	57	46	40	7.491	187	155	103	7	M10	83
85 x 125	67	57	46	40	9.096	214	167	114	8	M10	83
90 x 130	67	57	46	40	9.631	214	158	109	8	M10	83
95 x 135	67	57	46	40	12.708	268	187	131	10	M10	83
100 x 145	78	66	53	46	13.634	273	157	108	7	M12	145
110 x 155	80	68	52	45	17.931	326	175	124	8	M12	145
120 x 165	80	68	52	45	24.452	408	200	146	10	M12	145
130 x 180	80	68	52	45	31.787	489	222	160	12	M12	145
140 x 190	90	76	58	50	39.141	559	212	156	10	M14	230
150 x 200	90	76	58	50	50.325	671	237	178	12	M14	230
160 x 210	90	76	58	50	53.680	671	222	170	12	M14	230
170 x 225	90	76	58	50	66.540	783	244	185	14	M14	230
180 x 235	90	76	57	50	70.455	783	231	177	14	M14	230

Notes:
Dimensions representing the total length of the hub are indicative; they are calculated according to the geometric rules.

For assemblies requiring larger dimensions, contact our Technical Department.

It is possible to decrease the screws tightening torque Ms by up to 40% of the value stated in the table. Consequently, M_T, F_{ax}, P_w and P_n will decrease proportionally.

M_S	Screw tightening torque	Nm
M_T	Transmissible torque moment	Nm
F_{ax}	Transmissible axial load	N
p_w	Shaft pressure	N/mm^2
p_n	Hub pressure	N/mm^2

SIT-LOCK® 5B - Self-Centering with Flange

Locking assembly with single taper design. It is suitable for high torques. Provide good concentricity and self centring.

It is recommended for medium torques and is self-centering. The flange design prevent axial movement during installation.

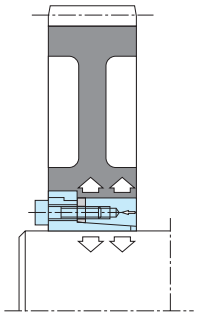

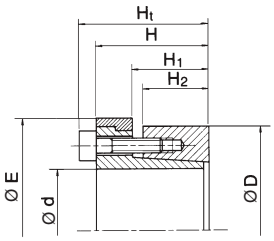

from type 20x47 to 100x145

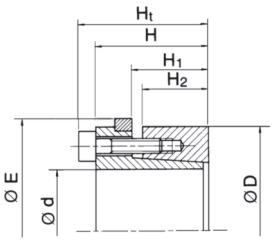

from type 110x155 to 180x235

Installation

Carefully clean contact surfaces of shaft and hub. Then, lightly oil both surfaces with standard mineral oil. Position the SIT-LOCK® on the shaft and into the hub machined bore. Align them as required by the application. Gradually and uniformly tighten the locking screws to the tightening torque (Ms).

You must tighten the screws in diametrically opposite sequence in stages:

- hand tighten the screws until the surfaces are in contact
- carefully check the position of the hub on the shaft
- tighten the screws to half the value of the tightening torque (Ms) stated in the catalogue
- repeat the operation until the tightening torque is reached using the dynamometric screw-driver
- check every locking screw to insure it has been tightened to the specific tightening torque

Do not use lubricant like "Molykote" or molybdenum disulfide based oils.

Removal

Gradually loosen all locking screws. Remove and transfer the screws into the releasing tapped holes and tighten them until the SIT-LOCK® is released.

Note: ITo reuse the locking element, carefully oil the screws and the conical surfaces, then follow installation instructions.

Concentricity

For self-centering locking assemblies, the clamping element has a centering effect and the concentricity error can be considered 0.02-0.04 mm.

Max allowable roughness
Rt 16 µm
Maximum recommended tolerance
shaft h 8 - hub H 8

SIT-LOCK® 5B

Dimensions [mm]						Performances		Pressure [N/mm²]		Clamping screws (DIN 912 - 12,9)		
d x D	H_t	H	H_1	H_2	E	M_T [Nm]	F_{ax} [kN]	p_w	p_n	N°	Type	M_s [Nm]
20 x 47	49	43	30	26	53	341	34	174	73	6	M6	17
22 x 47	49	43	30	26	53	375	34	158	73	6	M6	17
24 x 50	49	43	30	26	56	409	34	145	73	6	M6	17
25 x 50	49	43	30	26	56	426	34	139	73	6	M6	17
28 x 55	49	43	30	26	61	478	34	124	73	6	M6	17
30 x 55	49	43	30	26	61	512	34	116	73	6	M6	17
32 x 60	49	43	30	26	66	819	51	163	109	9	M6	17
35 x 60	49	43	30	26	66	895	51	149	109	9	M6	17
38 x 65	49	43	30	26	71	972	51	137	109	9	M6	17
40 x 65	49	43	30	26	71	1.023	51	131	109	9	M6	17
42 x 75	60	52	35	30	81	1.324	63	133	94	6	M8	41
45 x 75	60	52	35	30	81	1.418	63	124	94	6	M8	41
48 x 80	60	52	35	30	86	1.513	63	116	94	6	M8	41
50 x 80	60	52	35	30	86	1.576	63	111	94	6	M8	41
55 x 85	60	52	35	30	91	2.600	95	152	142	9	M8	41
60 x 90	60	52	35	30	96	2.836	95	139	142	9	M8	41
65 x 95	60	52	35	30	102	3.073	95	129	142	9	M8	41
70 x 110	67	57	46	40	117	4.087	117	111	117	7	M10	83
75 x 115	67	57	46	40	122	4.379	117	103	117	7	M10	83
80 x 120	67	57	46	40	127	4.670	117	97	117	7	M10	83
85 x 125	67	57	46	40	132	5.671	133	104	134	8	M10	83
90 x 130	67	57	46	40	137	6.005	133	98	134	8	M10	83
95 x 135	67	57	46	40	142	7.923	167	116	168	10	M10	83
100 x 145	78	66	53	46	153	8.500	170	98	127	7	M12	145
110 x 155	80	68	52	46	165	10.988	200	105	150	8	M12	145
120 x 165	80	68	52	46	175	14.984	250	120	187	10	M12	145
130 x 180	80	68	52	46	188	19.479	300	133	224	12	M12	145
140 x 190	90	76	58	51	199	23.986	343	127	204	10	M14	230
150 x 200	90	76	58	51	209	30.840	411	143	244	12	M14	230
160 x 210	90	76	58	51	219	32.896	411	134	244	12	M14	230
170 x 225	90	76	58	51	234	40.777	480	147	285	14	M14	230
180 x 235	90	76	57	51	244	43.175	480	139	285	14	M14	230

Notes:
Dimensions representing the total length of the hub are indicative; they are calculated according to the geometric rules.

For assemblies requiring larger dimensions, contact our Technical Department.

It is possible to decrease the screws tightening torque Ms by up to 40% of the value stated in the table. Consequently, M_T, F_{ax}, P_w and P_n will decrease proportionally.

M_S	Screw tightening torque	Nm
M_T	Transmissible torque moment	Nm
F_{ax}	Transmissible axial load	N
p_w	Shaft pressure	N/mm^2
p_n	Hub pressure	N/mm^2

SIT-LOCK® 6 - Self-Centering without Flange Short Version

Locking assembly with single taper design. Provides good concentricity and is self centering. A small axial movement of the hub during the installation operation may occurr. Applications requiring accurate axial positioning are not recommended with this type of locking assembly.
SITLOCK® 6 is suitable for applications with medium torques.

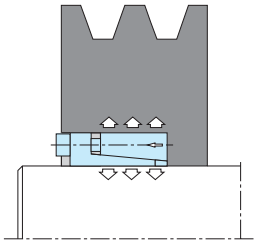

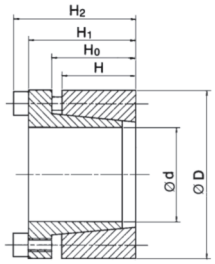

Installation

Carefully clean contact surfaces of shaft and hub. Then, lightly oil both surfaces with standard mineral oil. Position the SIT-LOCK® on the shaft and into the hub machined bore. Align them as required by the application. Gradually and uniformly tighten the locking screws to the tightening torque (Ms).

You must tighten the screws in diametrically opposite sequence in stages:

- hand tighten the screws until the surfaces are in contact
- carefully check the position of the hub on the shaft
- tighten the screws to half the value of the tightening torque (Ms) stated in the catalogue
- repeat the operation until the tightening torque is reached using the dynamometric screw-driver
- check every locking screw to insure it has been tightened to the specific tightening torque

Do not use lubricant like "Molykote" or molybdenum disulfide based oils.

Removal

Gradually loosen all locking screws. Remove and transfer the screws into the releasing tapped holes and tighten them until the SIT-LOCK® is released.

Note: To reuse the locking element, carefully oil the screws and the conical surfaces, then follow installation instructions.

Concentricity

For self-centering locking assemblies, the clamping element has a centering effect and the concentricity error can be considered 0.02-0.04 mm.

Maximum allowable roughness
Rt 16 µm
Maximum recommended tolerance
shaft h 8 - hub H 8

SIT-LOCK® 6

Dimensions [mm]					Performances		Pressure [N/mm²]		Clamping screws (DIN 912 - 12,9)		
d x D	H	H_0	H_1	H_2	M_T [Nm]	F_{ax} [kN]	p_w	p_n	N°	Type	M_s [Nm]
20 x 47	17	22	28	34	380	38	297	126	5	M6	14
22 x 47	17	22	28	34	419	38	270	126	5	M6	14
24 x 50	17	22	28	34	457	38	247	119	5	M6	14
25 x 50	17	22	28	34	571	46	285	142	6	M6	14
28 x 55	17	22	28	34	639	46	254	130	6	M6	14
30 x 55	17	22	28	34	685	46	237	130	6	M6	14
32 x 60	17	22	28	34	974	61	297	158	8	M6	14
35 x 60	17	22	28	34	1.065	61	271	158	8	M6	14
38 x 65	17	22	28	34	1.157	61	250	146	8	M6	14
40 x 65	17	22	28	34	1.218	61	237	146	8	M6	14
42 x 75	20	26	34	42	2.060	98	310	173	7	M8	35
45 x 75	20	26	34	42	2.207	98	289	173	7	M8	35
48 x 80	20	26	34	42	2.354	98	271	163	7	M8	35
50 x 80	20	26	34	42	2.452	98	260	163	7	M8	35
55 x 85	20	26	34	42	3.082	112	270	175	8	M8	35
60 x 90	20	26	34	42	3.363	112	248	165	8	M8	35
65 x 95	20	26	34	42	4.098	126	257	176	9	M8	35
70 x 110	24	30	40	50	6.240	178	281	179	8	M10	70
75 x 115	24	30	40	50	6.685	178	263	171	8	M10	70
80 x 120	24	30	40	50	7.131	178	246	164	8	M10	70
85 x 125	24	30	40	50	8.524	201	261	177	9	M10	70
90 x 130	24	30	40	50	9.025	201	246	171	9	M10	70
95 x 135	24	30	40	50	10.585	223	259	182	10	M10	70
100 x 145	26	32	44	56	13.045	261	266	184	8	M12	125
110 x 155	26	32	44	56	14.349	261	242	172	8	M12	125
120 x 165	26	32	44	56	17.610	294	250	181	9	M12	125
130 x 180	34	40	54	66	25.437	391	235	170	12	M12	125
140 x 190	34	40	54	68	28.155	402	224	165	9	M14	190
150 x 200	34	40	54	68	33.518	447	232	174	10	M14	190
160 x 210	34	40	54	68	39.327	492	240	183	11	M14	190
170 x 225	44	50	64	78	45.584	536	190	144	12	M14	190
180 x 235	44	50	64	78	48.265	536	180	138	12	M14	190
190 x 250	44	50	64	78	63.683	670	213	162	15	M14	190
200 x 260	44	50	64	78	67.035	670	202	155	15	M14	190

Notes:
Dimensions representing the total length of the hub are indicative; they are calculated according to the geometric rules.

For assemblies requiring larger dimensions, contact our Technical Department.

M_S	Screw tightening torque	Nm
M_T	Transmissible torque moment	Nm
F_{ax}	Transmissible axial load	N
p_w	Shaft pressure	N/mm^2
p_n	Hub pressure	N/mm^2

SIT-LOCK® 7 - Self-Centering with Flange, Short Version

Locking assembly with single taper design. Provides good concentricity and self centering.
It is recommended for medium torques and is self-centring.

The flange design prevents axial movement during installation.
It is suitable for applications with medium torques, and need very precise axial positioning.

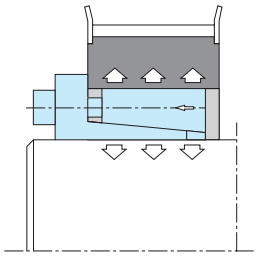

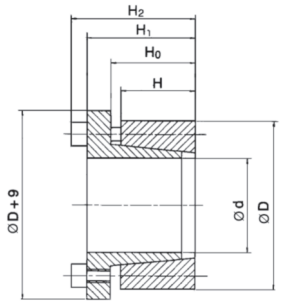

Installation

Carefully clean contact surfaces of shaft and hub. Then, lightly oil both surfaces with standard mineral oil. Position the SIT-LOCK® on the shaft and into the hub machined bore. Align them as required by the application. Gradually and uniformly tighten the locking screws to the tightening torque (Ms).

You must tighten the screws in diametrically opposite sequence in stages:

- hand tighten the screws until the surfaces are in contact
- carefully check the position of the hub on the shaft
- tighten the screws to half the value of the tightening torque (Ms) stated in the catalogue
- repeat the operation until the tightening torque is reached using the dynamometric screw-driver
- check every locking screw to insure it has been tightened to the specific tightening torque

Do not use lubricant like "Molykote" or molybdenum disulfide based oils.

Removal

Gradually loosen all locking screws. Remove and transfer the screws into the releasing tapped holes and tighten them until the SIT-LOCK® is released.

Note: To reuse the locking element, carefully oil the screws and the conical surfaces, then follow installation instructions.

Concentricity

For self-centering locking assemblies the clamping element has a centering effect and the concentricity error can be considered 0.02-0.04 mm.

Maximum allowable roughness
Rt 16 µm
Maximum recommended tolerance
shaft h 8 - hub H 8

SIT-LOCK® 7

Dimensions [mm]					Performances		Pressure [N/mm²]		Clamping screws (DIN 912 - 12,9)		
d x D	H	H_0	H_1	H_2	M_T [Nm]	F_{ax} [kN]	p_w	p_n	N°	Tipo	M_S [Nm]
20 x 47	17	22	28	34	284	28	222	94	5	M6	17
22 x 47	17	22	28	34	313	28	202	94	5	M6	17
24 x 50	17	22	28	34	341	28	185	89	5	M6	17
25 x 50	17	22	28	34	426	34	213	106	6	M6	17
28 x 55	17	22	28	34	478	34	190	97	6	M6	17
30 x 55	17	22	28	34	512	34	177	97	6	M6	17
32 x 60	17	22	28	34	728	45	222	118	8	M6	17
35 x 60	17	22	28	34	796	45	203	118	8	M6	17
38 x 65	17	22	28	34	864	45	187	109	8	M6	17
40 x 65	17	22	28	34	910	45	177	109	8	M6	17
42 x 75	20	26	34	42	1.544	74	232	130	7	M8	41
45 x 75	20	26	34	42	1.655	74	217	130	7	M8	41
48 x 80	20	26	34	42	1.765	74	203	122	7	M8	41
50 x 80	20	26	34	42	1.838	74	195	122	7	M8	41
55 x 85	20	26	34	42	2.311	84	203	131	8	M8	41
60 x 90	20	26	34	42	2.521	84	186	124	8	M8	41
65 x 95	20	26	34	42	3.073	95	193	132	9	M8	41
70 x 110	24	30	40	50	4.670	133	211	134	8	M10	83
75 x 115	24	30	40	50	5.004	133	197	128	8	M10	83
80 x 120	24	30	40	50	5.338	133	184	123	8	M10	83
85 x 125	24	30	40	50	6.380	150	195	133	9	M10	83
90 x 130	24	30	40	50	6.755	150	184	128	9	M10	83
95 x 135	24	30	40	50	7.923	167	194	137	10	M10	83
100 x 145	26	32	44	56	9.714	194	198	137	8	M12	145
110 x 155	26	32	44	56	10.686	194	180	128	8	M12	145
120 x 165	26	32	44	56	13.114	219	186	135	9	M12	145
130 x 180	34	40	54	66	18.943	291	175	126	12	M12	145
140 x 190	34	40	54	68	20.993	300	167	123	9	M14	230
150 x 200	34	40	54	68	24.992	333	173	130	10	M14	230
160 x 210	34	40	54	68	29.324	367	179	136	11	M14	230
170 x 225	44	50	64	78	33.989	400	142	107	12	M14	230
180 x 235	44	50	64	78	35.989	400	134	103	12	M14	230
190 x 250	44	50	64	78	47.485	500	159	121	15	M14	230
200 x 260	44	50	64	78	49.984	500	151	116	15	M14	230

Notes:
Dimensions representing the total length of the hub are indicative; they are calculated according to the geometric rules.

For assemblies requiring larger dimensions, contact our Technical Department.

M_S	Screw tightening torque	Nm
M_T	Transmissible torque moment	Nm
F_{ax}	Transmissible axial load	N
p_w	Shaft pressure	N/mm^2
p_n	Hub pressure	N/mm^2

SIT-LOCK® 8 - Self-Centering - Special Outside Diameters

Locking assembly with single taper design. The flange design prevents axial movement during installation.
SIT-LOCK® 8 has a very small axial dimension, is self centering and has been designed to suit various shaft diameters although the overall dimensions are the same. SIT-LOCK® 8 is recommended for applications with medium torques which need a good axial positioning. The limited number of screws make the installation fast.

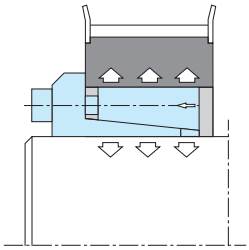

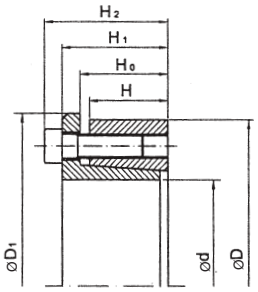

Installation

Carefully clean contact surfaces of shaft and hub. Then, lightly oil both surfaces with standard mineral oil. Position the SIT-LOCK® on the shaft and into the hub machined bore. Align them as required by the application. Gradually and uniformly tighten the locking screws to the tightening torque (Ms).

You must tighten the screws in diametrically opposite sequence in stages:

- hand tighten the screws until the surfaces are in contact
- carefully check the position of the hub on the shaft
- tighten the screws to half the value of the tightening torque (Ms) stated in the catalogue
- repeat the operation until the tightening torque is reached using the dynamometric screw-driver
- check every locking screw to insure it has been tightened to the specific tightening torque

Do not use lubricant like "Molykote" or molybdenum disulfide based oils.

Removal

Gradually loosen all locking screws. Remove and transfer the screws into the releasing tapped holes and tighten them until the SIT-LOCK® is released.

Note: To reuse the locking element, carefully oil the screws and the conical surfaces, then follow installation instructions.

Concentricity

For self-centering locking assemblies, the clamping element has a centering effect and the concentricity error can be considered 0.02-0.04 mm.

Maximum allowable roughness
Rt 16 µm
Maximum recommended tolerance
shaft h 8 - hub H 8

SIT-LOCK® 8

Dimensions [mm]						Performances		Pressure [N/mm²]		Clamping screws (DIN 912 - 12,9)		
d x D	H	H_0	H_1	H_2	D_1	M_T [Nm]	F_{ax} [kN]	p_w	p_n	N°	Type	M_s [Nm]
14 x 55	17	22	30	38	62	130	19	208	53	3	M8	25
16 x 55	17	22	30	38	62	149	19	182	53	3	M8	25
18 x 55	17	22	30	38	62	168	19	162	53	3	M8	25
19 x 55	17	22	30	38	62	177	19	153	53	3	M8	25
20 x 55	17	22	30	38	62	186	19	145	53	3	M8	25
22 x 55	17	22	30	38	62	288	26	186	74	3	M8	35
24 x 55	17	22	30	38	62	314	26	170	74	3	M8	35
25 x 55	17	22	30	38	62	328	26	164	74	3	M8	35
28 x 55	17	22	30	38	62	441	32	176	89	3	M8	41
30 x 55	17	22	30	38	62	473	32	164	89	3	M8	41
24 x 65	17	23	31	39	72	448	37	243	90	5	M8	30
25 x 65	17	23	31	39	72	467	37	233	90	5	M8	30
28 x 65	17	23	31	39	72	611	44	243	105	5	M8	35
30 x 65	17	23	31	39	72	655	44	227	105	5	M8	35
32 x 65	17	23	31	39	72	699	44	213	105	5	M8	35
35 x 65	17	23	31	39	72	919	53	234	126	5	M8	41
38 x 65	17	23	31	39	72	998	53	216	126	5	M8	41
40 x 65	17	23	31	39	72	1.051	53	205	126	5	M8	41
30 x 80	20	26	34	42	87	785	52	231	87	7	M8	30
32 x 80	20	26	34	42	87	837	52	217	87	7	M8	30
33 x 80	20	26	34	42	87	863	52	210	87	7	M8	30
35 x 80	20	26	34	42	87	1.070	61	232	101	7	M8	35
38 x 80	20	26	34	42	87	1.162	61	213	101	7	M8	35
40 x 80	20	26	34	42	87	1.223	61	203	101	7	M8	35
42 x 80	20	26	34	42	87	1.544	74	232	122	7	M8	41
45 x 80	20	26	34	42	87	1.655	74	217	122	7	M8	41
48 x 80	20	26	34	42	87	1.765	74	203	122	7	M8	41
50 x 80	20	26	34	42	87	1.838	74	195	122	7	M8	41

Notes:
Dimensions representing the total length of the hub are indicative; they are calculated according to the geometric rules.

For assemblies requiring larger dimensions, contact our Technical Department.

SIT-LOCK®

M_S	Screw tightening torque	Nm
M_T	Transmissible torque moment	Nm
F_{ax}	Transmissible axial load	N
p_w	Shaft pressure	N/mm^2
p_n	Hub pressure	N/mm^2

SIT-LOCK® 9 - Not Self-Centering

Consists of two tapered rings and a lock nut. In virtue of the simple design, very fast assembly/disassembly is allowed.

SIT-LOCK® 9 is suitable for applications with small-medium torques.

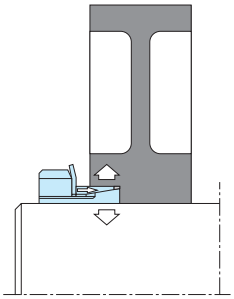

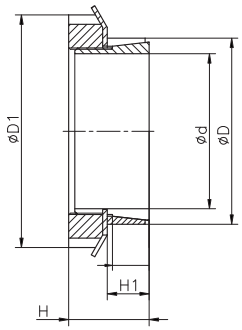

Installation

Carefully clean contact surfaces of shaft and hub. Then lightly oil both surfaces with standard mineral oil. Position the SIT-LOCK® in the machined bore of the hub. Insert the shaft. Gradually and uniformly tighten the locking nut to the tightening torque (Ms).

Note: once the tightening torque is reached, do no tighten the locking nut anymore.

Do not use lubricant like "Molykote" or molybdenum disulfide based oils.

Removal

Loosen the lock nut until the SIT-LOCK® is completely released.

Application 1

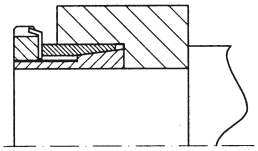

Application 2

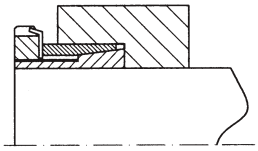

Dimensions [mm]				Performances		Pressure [N/mm²]		Slotten Nut		
d x D	D_1	H	H_1	M_T [Nm]	F_{ax} [kN]	p_w	p_n	Size		M_s [Nm]
14 x 25	32,0	17,0	9,0	52	7	241	135	KM4	M20x1	95
15 x 25	32,0	17,0	9,0	56	7	225	135	KM4	M20x1	95
16 x 25	32,0	17,0	9,0	60	7	211	135	KM4	M20x1	95
17 x 26	38,0	18,0	9,0	86	10	271	177	KM5	M25x1,5	160
18 x 26	38,0	18,0	9,0	91	10	256	177	KM5	M25x1,5	160
18 x 30	38,0	17,5	9,0	91	10	256	154	KM5	M25x1,5	160
19 x 30	38,0	18,0	9,0	96	10	242	154	KM5	M25x1,5	160
20 x 30	38,0	18,0	9,0	102	10	230	154	KM5	M25x1,5	160
22 x 32	45,0	18,0	9,0	127	12	238	164	KM6	M30x1,5	220
24 x 35	45,0	18,0	9,0	139	12	218	150	KM6	M30x1,5	220
25 x 35	45,0	18,0	9,0	144	12	210	150	KM6	M30x1,5	220
28 x 36	52,0	18,0	10,0	215	15	231	179	KM7	M35x1,5	340
28 x 40	52,0	18,0	9,0	215	15	248	174	KM7	M35x1,5	340
30 x 40	52,0	20,0	11,0	230	15	188	141	KM7	M35x1,5	340
32 x 42	58,0	22,0	11,0	302	19	218	166	KM8	M40x1,5	480
35 x 45	58,0	22,0	11,0	331	19	199	155	KM8	M40x1,5	480
36 x 45	58,0	22,0	11,0	340	19	194	155	KM8	M40x1,5	480
38 x 48	65,0	25,0	14,0	453	24	185	147	KM9	M45x1,5	680
40 x 50	65,0	25,0	14,0	477	24	176	141	KM9	M45x1,5	680
42 x 55	70,0	26,0	14,0	576	27	193	147	KM10	M50x1,5	870
45 x 55	70,0	26,0	14,0	617	27	180	147	KM10	M50x1,5	870
48 x 62	75,0	26,0	14,0	669	28	171	133	KM11	M55x2	970
50 x 60	75,0	26,0	14,0	697	28	164	137	KM11	M55x2	970
50 x 62	75,0	26,0	14,0	697	28	164	126	KM11	M55x2	970
55 x 65	80,0	27,0	15,0	796	29	129	109	KM12	M60x2	1.100
55 x 68	80,0	27,0	15,0	796	29	129	105	KM12	M60x2	1.100
56 x 68	80,0	27,0	15,0	810	29	127	105	KM12	M60x2	1.100
60 x 70	85,0	29,0	15,0	946	32	129	111	KM13	M65x2	1.300
60 x 73	85,0	29,0	15,0	946	32	129	106	KM13	M65x2	1.300
63 x 79	92,0	31,0	17,0	1.136	36	121	96	KM14	M70x2	1.600
65 x 79	92,0	31,0	17,0	1.172	36	117	96	KM14	M70x2	1.600
70 x 84	98,0	31,0	17,0	1.470	42	126	105	KM15	M75x2	2.000

Notes:
Dimensions representing the total length of the hub are indicative; they are calculated according to the geometric rules.

For assemblies requiring larger dimensions, contact our Technical Department.

Note:
M_T, F_{ax}, P_w and P_n stated in this catalogue are valid for application 1. For application 2, they have to be increased by 25%.

Maximum allowable roughness
Rt 16 µm
Maximum recommended tolerance
shaft h 8 - hub H 8

M_S	Screw tightening torque	Nm
M_T	Transmissible torque moment	Nm
F_{ax}	Transmissible axial load	N
p_w	Shaft pressure	N/mm^2
p_n	Hub pressure	N/mm^2

SIT-LOCK® 10 - External Rigid Shaft Coupling

SIT-LOCK® 10 are shrink disk couplings with double taper design. They offer easy angular timing and axial adjustment of shaft ends.

They transmit high torque and bending moment without keys and offer a low cost solution for shaft to shaft rigid connection.

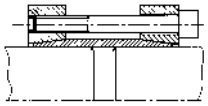

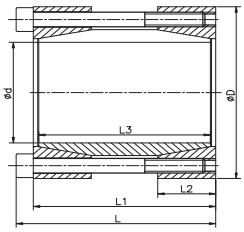

Installation

Carefully clean contact surfaces of shaft and hub. Then, lightly oil both surfaces with standard mineral oil. Position the SIT-LOCK® on the shaft and into the hub machined bore. Align them as required by the application. Gradually and uniformly tighten the locking screws to the tightening torque (Ms).

You must tighten the screws in diametrically opposite sequence in stages:

- hand tighten the screws until the surfaces are in contact
- carefully check the position of the hub on the shaft
- tighten the screws to half the value of the tightening torque (Ms) stated in the catalogue
- repeat the operation until the tightening torque is reached using the dynamometric screw-driver
- check every locking screw to insure it has been tightened to the specific tightening torque

Note: once the tightening torque is reached, do not continue to tighten the screws. Do not use lubricant like "Molykote" or molybdenum disulfide based oils.

Removal

Loosen all the locking screws in a clockwise sequence until coupling can be moved on shafts. Do not remove screws completely.

Note: Toreuse the locking element, carefully oil the screws and the conical surfaces, then follow installation instructions.

Dimensions [mm]					Performances		Clamping screws (DIN 912 - 12,9)		
d x D	L	L_1	L_2	L_3	M_T [Nm]	F_{ax} [kN]	N°	Type	M_s [Nm]
17 x 50	56	50	16	44	179	21	4	M6x45	17
18 x 50	56	50	16	44	190	21	4	M6x45	17
19 x 50	56	50	16	44	200	21	4	M6x45	17
20 x 50	56	50	16	44	211	21	4	M6x45	17
22 x 55	66	60	18,5	54	347	32	6	M6x55	17
24 x 55	66	60	18,5	54	379	32	6	M6x55	17
25 x 55	66	60	18,5	54	394	32	6	M6x55	17
28 x 60	66	60	18,5	54	442	32	6	M6x55	17
30 x 60	66	60	18,5	54	473	32	6	M6x55	17
32 x 63	66	60	18,5	54	505	32	6	M6x55	17
35 x 75	83	75	22	67	682	39	4	M8x70	42
38 x 75	83	75	22	67	741	39	4	M8x70	42
40 x 75	83	75	22	67	780	39	4	M8x70	42
42 x 78	83	75	22	67	819	39	4	M8x70	42
45 x 85	93	85	24,5	76	1.317	59	6	M8x80	42
48 x 90	93	85	24,5	76	1.405	59	6	M8x80	42
50 x 90	93	85	24,5	76	1.463	59	6	M8x80	42
55 x 94	93	85	24,5	76	2.147	78	8	M8x80	42
60 x 100	93	85	24,5	76	2.343	78	8	M8x80	42
65 x 105	93	85	24,5	76	2.538	78	8	M8x80	42
70 x 115	110	100	29	90	3.239	93	6	M10x95	83
75 x 120	110	100	29	90	3.471	93	6	M10x95	83
80 x 125	110	100	29	90	4.938	123	8	M10x95	83

Notes:
Dimensions representing the total length of the hub are indicative; they are calculated according to the geometric rules.

For assemblies requiring larger dimensions, contact our Technical Department.

Maximum allowable roughness
Rt 16 µm
Maximum recommended tolerance
shaft h 8

M_S	Screw tightening torque	Nm
M_T	Transmissible torque moment	Nm
F_{ax}	Transmissible axial load	N

SIT-LOCK® 11 - External Shrink Discs

Shrink discs are external locking devices which are installed over hub projections. By locking the screws, radial pressures act on the hub allowing an effective and solid connection.

Recommended for medium and high torque. SIT-LOCK® 11S is also available in “SPLIT” and “HALF” for special applications.

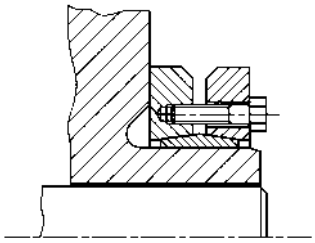

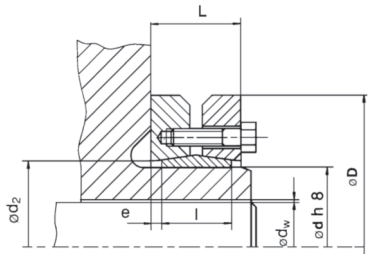

Installation

Carefully remove, if present, protection spacers used during transport.
Check if the screws and the rings’ cone surfaces are well lubricated, otherwise, lightly oil them with molybdenum disulfide lubricants, like “Molykote” or similar. Clean, with care, contact surfaces of shaft and hub.

Position the components to connect. In uniform sequence, tighten the clamping screws to the tightening torque (Ms). Check optically that the gap between outer rings is the most uniform possible.
Note: once the tightening torque is reached, do not tighten the screws.

Removal

Loosen the screws uniformly and gradually to prevent rings from jamming. When all the screws are loose, remove the shaft or separate the hub and shaft itself.

Note: To reuse the locking element, carefully disassemble, clean and inspect all the components; oil the screws and the conical surfaces, then follow Installation instructions.

Maximum recommended tolerance

diameter shaft d; h 8
diameter shaft d_w;
j6 for ∅ ≤ 30
h6 for ∅ between 30 to 50
g6 for ∅ between 50 to 80
g6 for ∅ > 80

diameter bore d_w;
H6 for ∅ ≤ 30
H6 for ∅ between 30 to 50
H6 for ∅ between 50 to 80
H7 for ∅ > 80

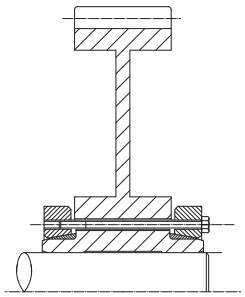

“Split” version

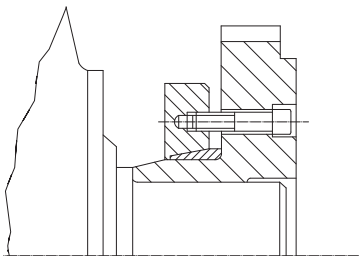

“Half” version

Maximum allowable roughness
Rt 16 µm

SIT-LOCK® 11S - standard version

Dimensions [mm]							Performances		Clamping screws (DIN 931 -		
d	**D**	d_w	l	L	d_2	e	M_T [Nm]	F_{ax} [kN]	N°	Tipo	M_s [Nm]
24	**50**	19 20 21	14	19,5	26	2,75	170 210 250	30 30 30	6	M 5	4
30	**60**	24 25 26	16	21,5	32	2,75	300 340 380	30 30 30	7	M 5	4
36	**72**	28 30 31	18	23,5	38	2,75	440 570 630	50 60 60	5	M 6	12
44	**80**	32 35 36	20	25,5	47	2,75	620 780 860	60 70 80	7	M 6	12
50	**90**	38 40 42	22	27,5	53	2,75	940 1.160 1.380	90 90 90	8	M 6	12
55	**100**	42 45 48	23	30,5	58	3,75	1.160 1.520 1.880	80 90 100	8	M 6	12
62	**110**	48 50 52	23	30,5	66	3,75	1.750 2.000 2.250	100 110 120	10	M 6	12
68	**115**	50 55 60	23	30,5	72	3,75	2.000 2.600 3.150	100 110 120	10	M 6	12
75	**138**	55 60 65	25	32,5	79	3,75	2.400 3.200 3.950	120 140 160	7	M 8	30
80	**145**	60 65 70	25	32,5	84	3,75	3.200 3.900 4.600	120 140 160	7	M 8	30
90	**155**	65 70 75	30	39	94	4,5	4.750 6.000 7.250	170 190 210	10	M 8	30
100	**170**	70 75 80	34	44	104	5,0	6.900 7.500 9.000	200 220 240	12	M 8	30
110	**185**	75 80 85	39	50	114	5,5	7.200 9.000 10.800	230 250 260	9	M10	59
125	**215**	85 90 95	42	54	134	6,0	11.000 13.000 15.000	300 320 350	12	M10	59
140	**230**	95 100 105	46	60,5	146	7,25	15.100 17.600 20.100	370 400 430	10	M12	100
155	**265**	105 110 115	50	64,5	165	7,25	22.000 25.000 28.000	450 480 510	12	M12	100
165	**290**	115 120 125	56	71	175	7,5	31.000 35.000 39.000	600 630 660	8	M16	250
175	**300**	125 130 135	56	71	185	7,5	36.000 41.000 45.000	610 640 680	8	M16	250
185	**330**	135 140 145	71	86	195	7,5	52.000 57.000 62.000	780 820 860	10	M16	250
195	**350**	140 150 155	71	86	210	7,5	65.000 76.000 81.500	930 1.030 1.070	12	M16	250
200	**350**	150 155 160	71	86	210	7,5	74.000 80.000 86.000	990 1.040 1.080	12	M16	250
220	**370**	160 165 170	88	104	230	8	95.000 102.000 110.000	1.190 1.240 1.290	15	M16	250

Notes:
Dimensions representing the total length of the hub are indicative; they are calculated according to the geometric rules.
For assemblies requiring larger dimensions, contact our Technical Department.

M_S	Screw tightening torque	Nm
M_T	Transmissible torque moment	Nm
F_{ax}	Transmissible axial load	N

SIT-LOCK® 11S - standard series

Dimensions [mm]							Performances		Clamping screws (DIN 931 - 10,9)		
d	**D**	d_w	l	L	d_2	e	M_T [Nm]	F_{ax} [kN]	N°	Tipo	M_s [Nm]
240	**405**	170 180 190	92	109	248	8,5	120.000 138.000 156.000	1.460 1.580 1.680	12	M20	490
260	**430**	190 200 210	103	120	268	8,5	164.000 184.000 205.000	1.760 1.880 2.010	14	M20	490
280	**460**	210 220 230	114	134	288	10	217.000 244.000 270.000	2.090 2.220 2.350	16	M20	490
300	**485**	230 240 245	122	142	308	10	275.000 295.000 315.000	2.470 2.570 2.640	18	M20	490
320	**520**	240 250 260	122	142	328	10	312.000 340.000 374.000	2.650 2.790 2.900	20	M20	490
340	**570**	250 260 270	134	156	348	11	390.000 422.500 460.000	3.120 3.250 3.400	24	M20	490
350	**580**	270 280 285	140	162	358	11	442.000 480.000 500.000	3.280 3.430 3.500	24	M20	490
360	**590**	280 290 295	140	162	368	11	463.000 502.000 522.000	3.310 3.460 3.540	24	M20	490
380	**645**	290 300 310	144	168	387	12	567.000 610.000 658.000	3.910 4.080 4.250	20	M24	840
390	**660**	300 310 320	144	168	397	12	624.000 671.000 718.000	4.160 4.330 4.480	21	M24	840
400	**680**	315 320 330	144	168	407	12	670.000 695.000 744.000	4.260 4.350 4.500	21	M24	840
420	**690**	330 340 350	164	188	427	12	780.000 840.000 900.000	4.850 5.040 5.220	24	M24	840
440	**750**	340 350 360	177	202	447	12,5	806.000 860.000 917.000	4.740 4.910 5.090	24	M24	840
460	**770**	360 370 380	177	202	468	12,5	1.000.000 1.070.000 1.140.000	5.670 5.860 6.050	28	M24	840
480	**800**	380 390 400	188	213	488	12,5	1.170.000 1.240.000 1.310.000	6.150 6.350 6.550	30	M24	840

Notes:
Dimensions representing the total length of the hub are indicative; they are calculated according to the geometric rules.
For assemblies requiring larger dimensions, contact our Technical Department.

M_S	Screw tightening torque	Nm
M_T	Transmissible torque moment	Nm
F_{ax}	Transmissible axial load	N

SIT-LOCK® 11H - heavy series

Dimensions [mm]							Performances		Clamping screws (DIN 931 - 10,9)		
d	**D**	d_w	l	L	d_2	e	M_T [Nm]	F_{ax} [kN]	Tipo	N°	M_s [Nm]
125	**215**	85 90 95	55	65	129	5	15.000 17.500 20.000	360 390 420	10	M12	100
140	**230**	95 100 105	60	74	144	7	20.600 23.500 26.500	430 470 500	12	M12	100
155	**265**	105 110 115	66	80	164	7	28.600 32.500 36.400	550 590 630	15	M12	100
165	**290**	115 120 125	72	88	174	8	41.000 46.000 50.700	740 790 820	10	M16	250
175	**300**	125 130 135	72	88	184	8	47.000 52.000 57.000	750 800 840	10	M16	250
185	**330**	135 140 145	92	112	194	10	72.000 78.000 86.000	1.100 1.150 1.200	14	M16	250
195	**350**	140 150 155	92	112	199	10	75.000 88.000 96.000	1.080 1.180 1.240	14	M16	250
200	**350**	145 150 155	92	112	204	10	85.000 92.500 100.000	1.170 1.230 1.290	15	M16	250
220	**370**	160 165 170	114	134	2224	10	127.000 136.000 146.500	1.590 1.650 1.720	20	M16	250
240	**405**	170 180 190	120	144	244	12	155.000 176.000 198.000	1.820 1.960 2.080	15	M20	490
260	**430**	190 200 210	136	160	265	12	213.000 240.000 268.000	2.260 2.420 2.580	18	M20	490
280	**460**	210 220 230	148	172	285	12	285.000 320.000 355.000	2.740 2.910 3.090	21	M20	490
300	**485**	230 240 245	152	176	305	12	341.000 376.000 394.000	2.960 3.130 3.220	22	M20	490
320	**520**	240 250 260	160	184	325	12	378.500 415.000 451.000	3.150 3.330 3.470	24	M20	490
340	**570**	250 260 270	176	200	345	12	489.500 530.000 578.000	3.910 4.080 4.280	21	M24	840
350	**580**	270 280 285	176	200	355	12	556.000 604.000 629.000	4.120 4.320 4.420	21	M24	840
360	**590**	280 290 295	180	204	365	12	612.000 663.000 689.000	4.370 4.570 4.670	22	M24	840
380	**645**	290 300 310	180	204	387	12	618.000 668.000 719.000	4.270 4.460 4.650	22	M24	840
390	**660**	300 310 320	188	212	397	12	708.000 762.000 814.500	4.720 4.910 5.090	24	M24	840
400	**680**	315 320 330	188	212	407	12	765.000 788.000 845.000	4.860 4.930 5.130	24	M24	840
420	**690**	330 340 350	214	238	427	12	999.000 1.068.000 1.140.000	6.060 6.290 6.520	30	M24	840
440	**750**	340 350 360	224	252	448	14	1.058.000 1.130.000 1.204.000	6.230 6.460 6.690	24	M27	1.250
460	**770**	360 370 380	224	252	468	14	1.320.000 1.420.000 1.500.000	7.440 7.700 7.950	28	M27	1.250

Notes:
Dimensions representing the total length of the hub are indicative; they are calculated according to the geometric rules.

For assemblies requiring larger dimensions, contact our Technical Department.

M_S	Screw tightening torque	Nm
M_T	Transmissible torque moment	Nm
F_{ax}	Transmissible axial load	N

SIT-LOCK® 11L - light series

Dimensions [mm]							Performances		Clamping screws (DIN 931 - 10,9)		
d	**D**	d_w	l	L	d_2	e	M_T [Nm]	F_{ax} [kN]	N°	type	M_s [Nm]
125	**185**	95 100 105	39	51	129	6	10.550 12.100 13.800	220 240 260	8	M10	59
140	**220**	110 120 125	39	51	144	6	14.800 18.640 20.500	270 310 330	9	M10	59
155	**245**	130 135 140	39	51	159	6	24.000 26.400 29.000	370 390 410	11	M10	59
165	**260**	135 140 145	46	62	169	8	32.000 35.200 38.500	480 500 530	10	M12	100
175	**275**	145 150 155	46	62	179	8	39.000 42.400 46.000	540 560 590	11	M12	100
185	**295**	155 160 165	46	62	189	8	46.600 50.300 54.000	600 630 650	12	M12	100
195	**315**	165 170 175	56	72	199	8	63.000 67.700 72.500	760 800 830	15	M12	100
200	**330**	175 180 185	56	72	204	8	74.000 79.500 84.500	850 890 920	16	M12	100
220	**345**	180 190 200	66	84	224	9	82.800 93.500 105.000	920 980 1.060	10	M16	250
240	**370**	200 210 215	66	84	244	9	113.000 127.500 134.500	1.140 1.210 1.250	12	M16	250
260	**395**	220 230 235	72	92	265	10	149.000 165.000 173.000	1.350 1.440 1.480	14	M16	250
280	**425**	230 240 250	84	104	285	10	171.000 189.000 208.000	1.490 1.570 1.660	16	M16	250
300	**460**	250 260 270	84	104	305	10	215.000 234.000 255.000	1.720 1.800 1.890	18	M16	250
320	**495**	270 280 290	84	106	325	11	260.000 284.000 306.000	1.940 2.030 2.120	20	M16	250
340	**535**	290 300 305	84	106	345	11	300.000 324.400 337.000	2.070 2.160 2.210	21	M16	250
350	**545**	300 305 310	100	122	355	11	372.000 385.000 400.000	2.480 2.540 2.590	16	M20	490
360	**555**	300 310 320	100	122	365	11	360.000 388.000 415.000	2.400 2.500 2.590	16	M20	490
380	**585**	320 325 330	112	136	387	12	435.000 451.000 467.000	2.720 2.780 2.840	18	M20	490
390	**595**	330 340 350	112	136	397	12	505.000 540.000 577.000	3.060 3.180 3.300	20	M20	490
400	**615**	340 350 360	112	136	407	12	550.000 587.000 626.000	3.230 3.360 3.480	21	M20	490
420	**630**	350 360 370	120	144	427	12	578.000 617.000 655.000	3.300 3.430 3.550	22	M20	490
440	**660**	370 380 390	120	144	447	12	677.000 719.000 762.000	3.660 3.790 3.910	24	M20	490
460	**685**	390 400 410	132	158	468	13	840.000 890.000 935.000	4.320 4.460 4.580	28	M20	490

Notes:
Dimensions representing the total length of the hub are indicative; they are calculated according to the geometric rules.

For assemblies requiring larger dimensions, contact our Technical Department.

M_S	Screw tightening torque	Nm
M_T	Transmissible torque moment	Nm
F_{ax}	Transmissible axial load	N

SIT-LOCK® 12 - Self-Centering

SIT-LOCK® 12 is self-centering unit and convenient series. It is suggested for large quantities in applications with medium torques.

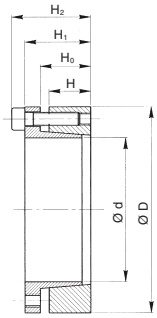

Installation

Carefully clean contact surfaces of shaft and hub. Then, lightly oil both surfaces with standard mineral oil. Position the SIT-LOCK® on the shaft and into the hub machined bore. Align them as required by the application. Gradually and uniformly tighten the locking screws to the tightening torque (Ms).

You must tighten the screws in diametrically opposite sequence in stages:

- hand tighten the screws until the surfaces are in contact
- carefully check the position of the hub on the shaft
- tighten the screws to half the value of the tightening torque (Ms) stated in the catalogue
- repeat the operation until the tightening torque is reached using the dynamometric screw-driver
- check every locking screw to insure it has been tightened to the specific tightening torque

Do not use lubricant like "Molykote" or molybdenum disulfide based oils.

Removal

Gradually loosen all locking screws. Remove and transfer the screws into the releasing tapped holes and tighten them until the SIT-LOCK® is released.

Note: To reuse the locking element, carefully oil the screws and the conical surfaces, then follow installation instructions.

Dimensions [mm]					Performances		Pressure [N/mm²]		Clamping screws (DIN 912 - 12,9)		
d x D	H	H_0	H_1	H_2	M_T [Nm]	F_{ax} [kN]	p_w	p_n	N°	Type	M_s [Nm]
18 x 40	12	15	20	24	210	24	235	130	6	M4	5
19 x 41	12	15	20	24	220	24	220	128	6	M4	5
20 x 42	12	15	20	24	270	28	245	145	7	M4	5
22 x 44	12	15	20	24	300	28	225	140	7	M4	5
24 x 46	12	15	20	24	330	28	205	135	7	M4	5
25 x 47	12	15	20	24	340	28	195	130	7	M4	5
28 x 50	12	15	20	24	500	36	225	155	9	M4	5
30 x 52	12	15	20	24	530	36	210	151	9	M4	5
32 x 54	12	15	20	24	570	36	197	146	9	M4	5
35 x 57	16	19	24	28	690	40	158	115	10	M4	5
36 x 58	16	19	24	28	710	40	155	113	10	M4	5
38 x 60	16	19	24	28	830	44	160	120	11	M4	5
40 x 62	16	19	24	28	870	44	150	116	11	M4	5
42 x 70	19	23	30	36	1.530	73	200	146	8	M6	17
45 x 73	19	23	30	36	1.640	73	185	140	8	M6	17
48 x 76	19	23	30	36	1.750	73	175	134	8	M6	17
50 x 78	19	23	30	36	1.820	73	165	131	8	M6	17
55 x 83	19	23	30	36	2.000	73	150	123	8	M6	17
56 x 84	19	23	30	36	2.040	73	150	120	8	M6	17
60 x 88	19	23	30	36	2.460	82	158	130	9	M6	17
63 x 91	19	23	30	36	2.580	82	150	125	9	M6	17
65 x 93	19	23	30	36	2.660	82	140	120	9	M6	17
70 x 105	23	28	37	45	4.720	135	18,0	148	8	M8	41
75 x 110	23	28	37	45	5.050	135	170	140	8	M8	41
80 x 115	23	28	37	45	5.390	135	160	135	8	M8	41
85 x 120	23	28	37	45	5.730	135	150	130	8	M8	41
90 x 125	23	28	37	45	7.580	169	170	156	10	M8	41

Notes:
Dimensions representing the total length of the hub are indicative; they are calculated according to the geometric rules.

For assemblies requiring larger dimensions, contact our Technical Department.

Maximum allowable roughness
Rt 16 µm
Maximum recommended tolerance
shaft h 8 - hub H 8

M_S	Screw tightening torque	Nm
M_T	Transmissible torque moment	Nm
F_{ax}	Transmissible axial load	N

SIT-LOCK® 13 - Self-Centering

SIT-LOCK®13 is very close to the standard type SIT-LOCK® 9, but it is manufactured in a longer execution. It is made of two tapered rings and a locking nut.

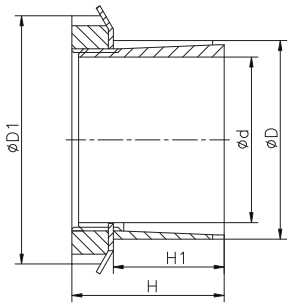

Installation

Carefully clean contact surfaces of shaft and hub. Then lightly oil both surfaces with standard mineral oil. Position the SIT-LOCK® in the machined bore of the hub. Insert the shaft. Gradually and uniformly tighten the locking nut to the tightening torque (Ms).

Note: once the tightening torque is reached, do no tighten the locking nut anymore.

Do not use lubricant like "Molykote" or molybdenum disulfide based oils.

Removal

Loosen the lock nut until the SIT-LOCK® is completely released.

Note: Disassembling the SIT-LOCK® 13 may be difficult due to its particular taper angle. Therefore, if torque is sufficient, it is recommended to use SIT-LOCK® 9, which is easier to be disassembled.

Dimensions [mm]				Performances		Pressure [N/mm²]		Slotten nut		
d x D	D_1	H_1	H	M_T [Nm]	F_{ax} [kN]	p_w	p_n	N°	Size	M_s [Nm]
14 x 25	32	23	31	72	9	98	55	KM4	M20x1	95
15 x 25	32	23	31	77	9	91	55	KM4	M20x1	95
18 x 30	38	24	33	125	13	98	59	KM5	M25x1,5	160
19 x 30	38	24	33	132	13	93	59	KM5	M25x1,5	160
20 x 30	38	24	33	139	13	88	59	KM5	M25x1,5	160
24 x 35	45	29	38	202	15	74	51	KM6	M30x1,5	200
25 x 35	45	29	38	210	15	71	51	KM6	M30x1,5	220
28 x 40	52	34	44	312	20	76	53	KM7	M35x1,5	340
30 x 40	52	34	44	335	20	71	53	KM7	M35x1,5	340
32 x 45	58	34	45	442	25	82	58	KM8	M40x1.5	340
35 x 45	58	34	45	483	25	75	58	KM8	M40x1,5	480
40 x 50	65	35	46	696	31	82	66	KM9	M45x1,5	680
45 x 55	70	35	47	902	36	84	69	KM10	M50x1,5	870
48 x 60	75	35	47	991	37	82	65	KM11	M55x2	970
50 x 60	75	35	47	1.014	37	77	64	KM11	M55x2	970
55 x 65	80	36	48	1.158	38	73	61	KM12	M60x2	1.100
60 x 70	85	36	50	1.379	41	73	62	KM13	M65x2	1.300

Notes:
Dimensions representing the total length of the hub are indicative; they are calculated according to the geometric rules.

For assemblies requiring larger dimensions, contact our Technical Department.

Maximum allowable roughness
Rt 16 µm
Maximum recommended tolerance
shaft h 8 - hub H 8

M_S	Screw tightening torque	Nm
M_T	Transmissible torque moment	Nm
F_{ax}	Transmissible axial load	N
p_w	Shaft pressure	N/mm²
p_n	Hub pressure	N/mm²

SIT-LOCK® 14 - External Two Piece Shrink Disc

SIT-LOCK® 14 are shrink discs for external, series “14”, are characterised by a single tapered ring instead of opposite tapers of the 3 pieces shrink discs SIT-LOCK® series “11”. The SIT-LOCK® 14 Shrink discs offer a better concentricity and centering and very good balancing. These features make the series highly suitable for mid-high speed applications.
SIT-LOCK® 14 are manufactured in five different types:

- 14-21 for mid torque transmission
- 14-22 for high torque transmission
- 14-81 for very high torque transmission
- 14-23 equivalent in size to the type 14-22 but able to transmit an extra 20-30% of torque
- 14-83 equivalent in size to the type 14-81 but able to transmit an extra 20-30% of torque

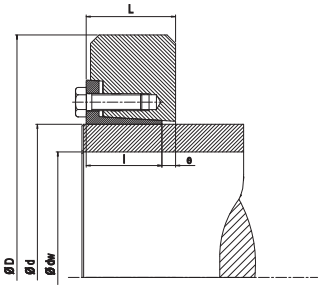

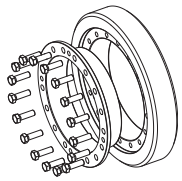

Installation

SIT-LOCK® 14 is ready to be mounted. Avoid dismounting before use.

- Carefully clean the hub-shaft contact area.
- Verify the threads, head of the locking screw, and the tapers of the inner rings. If necessary, lubricate them with molybdenum disulfide grease.
- Insert the shrink disc on the hollow shaft.
  Warning: do not tighten the screws before the shaft is fixed to the shaft.
- Slide the shaft on the hub or mount the hub on the shaft.
- Using a torque wrench, tighten the screws gradually and in sequence all the way around (not in a diametrical opposite sequence).
- Verify the screws are completely tightened. Make one final pass. If no bolts move, installation is completed.

Removal

- Gradually loose the locking screws all the way around. Begin by releasing each bolt about one-quarter of a turn.
- Back all screws out until there is a gap between the head of the bolt and the SIT-LOCK® face.
- Completely remove a few screws and thread them into the adjacent removal threads. Use these fasteners to push the inner ring away from the outer collar until the SIT-LOCK® is loose.

Note: After removal of an existing component, disassemble the SIT-LOCK®. Clean and inspect all parts. Reinstall the assembly following installation procedure.

Tolerance

Transmissible torque values are valid when hub shaft tolerance tolerances, and roughness tolerance, are respected.

Maximum allowable roughness
Rt 16 µm
Maximum recommended tolerance
shaft h 6 - hub H 7 for d_w < 160 mm
shaft g 6 - hub H 7 for $d_w \geq$ 160 mm
d = f 7 o better

SIT-LOCK® 1421

Dimensions						Performances		Clamping screws (DIN 933 - 10,9)	
d [mm]	**D** [mm]	d_w [mm]	l [mm]	L [mm]	e [mm]	M_T [Nm]	Fax [kN]	N°	Ms [Nm]
140	**215**	110	38	46	8	16.000	298	M12	100
		120				20.000	341		
		130				25.000	385		
155 160	**245**	130	38	46	8	26.000	398	M12	100
		135				28.000	420		
		140				31.000	443		
165 170	**263**	135	43	53	10	29.000	432	M14	160
		140				32.000	456		
		145				35.000	480		
175 180	**275**	145	43	53	10	36.000	497	M14	160
		150				39.000	522		
		155				42.000	547		
185 190	**290**	155	51	62	11	50.000	645	M14	160
		160				54.000	675		
		165				58.000	704		
195 200	**320**	165	51	62	11	68.000	822	M14	160
		170				73.000	855		
		180				83.000	922		
220	**340**	180	55	70	15	80.000	892	M16	240
		190				91.000	962		
		200				103.000	1.032		
240	**370**	200	55	70	15	103.000	1.026	M16	240
		210				115.000	1.095		
		220				128.000	1.165		
260	**405**	220	55	70	15	132.000	1.197	M16	240
		230				146.000	1.271		
		240				161.000	1.344		
280	**430**	230	65	80	15	160.000	1.392	M20	470
		240				177.000	1.473		
		250				194.000	1.555		
300	**460**	250	65	80	15	191.000	1.529	M20	470
		260				209.000	1.610		
		270				228.000	1.691		
320	**485**	270	77	92	15	243.000	1.804	M20	470
		280				265.000	1.894		
		290				288.000	1.986		
340	**520**	280	77	92	15	274.000	1.958	M20	470
		290				297.000	2.050		
		300				322.000	2.143		
360	**570**	300	89	105	16	356.000	2.373	M20	470
		310				384.000	2.476		
		330				443.000	2.686		
390	**590**	330	89	105	16	438.000	2.654	M20	470
		340				469.000	2.759		
		350				501.000	2.865		
420	**630**	350	120	140	20	624.000	3.564	M24	820
		360				665.000	3.697		
		370				709.000	3.831		
440	**660**	370	132	152	20	778.000	4.203	M24	820
		380				826.000	4.350		
		390				877.000	4.497		
460	**690**	390	132	152	20	852.000	4.370	M24	820
		400				903.000	4.514		
		410				955.000	4.658		
480	**720**	410	152	174	22	1.086.000	5.298	M24	820
		420				1.147.000	5.461		
		430				1.210.000	5.626		
500	**745**	420	152	174	22	1.137.000	5.415	M24	820
		430				1.200.000	5.581		
		450				1.331.000	5.914		
530	**790**	450	162	186	24	1.376.000	6.114	M27	1.210
		460				1.446.000	6.287		
		480				1.592.000	6.635		
560	**830**	480	162	187	25	1.578.000	6.576	M27	1.210
		490				1.653.000	6.748		
		510				1.809.000	7.093		

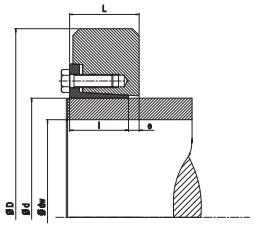

Notes:
Dimensions representing the total length of the hub are indicative; they are calculated according to the geometric rules.

M_S	Screw tightening torque	Nm
M_T	Transmissible torque moment	Nm
F_{ax}	Transmissible axial load	N

SIT-LOCK® 1421

Dimensions						Performances		Clamping screws (DIN 933 - 10,9)	
d [mm]	**D** [mm]	d_w [mm]	l [mm]	L [mm]	e [mm]	M_T [Nm]	Fax [kN]	N°	Ms [Nm]
590	**880**	510	172	197	25	1.873.000	7.344	M27	1.210
		520				1.957.000	7.526		
		540				2.131.000	7.891		
620	**930**	540	172	198	26	2.097.000	7.768	M27	1.210
		550				2.186.000	7.948		
		570				2.368.000	8.309		
660	**990**	570	182	209	27	2.426.000	8.511	M30	1.640
		580				2.522.000	8.696		
		610				2.823.000	9.255		
700	**1040**	610	182	210	28	2.772.000	9.088	M30	1.640
		620				2.874.000	9.271		
		640				3.084.000	9.638		
750	**1100**	640	192	222	30	3.104.000	9.700	M30	1.640
		650				3.214.000	9.888		
		680				3.555.000	10.456		
800	**1150**	680	192	224	32	3.443.000	10.128	M30	1.640
		700				3.673.000	10.495		
		730				4.033.000	11.049		

Notes:
Dimensions representing the total length of the hub are indicative; they are calculated according to the geometric rules.

M_S	Screw tightening torque	Nm
M_T	Transmissible torque moment	Nm
F_{ax}	Transmissible axial load	N

SIT-LOCK® 1422-1481

Dimensions						CAL 1422			CAL 1481			Clamping screws DIN 931
d [mm]	D [mm]	dw [mm]	l [mm]	L [mm]	e [mm]	MT [Nm]	Fax [kN]	Ms [Nm]	MT [Nm]	Fax [kN]	Ms [Nm]	
12	35	9	10	11	1	20	5	12	-	-	-	M6
		10				40	8		-	-		
14	38	11	10	11	1	30	6	12	-	-	-	M6
		12				50	9		-	-		
16	41	13	13,5	15	1,5	70	10	12	-	-	-	M6
		14				90	13		-	-		
18	44	15	13,5	15	1,5	80	11	12	-	-	-	M6
		16				110	14		-	-		
20	47	17	13,5	15	1,5	150	18	12	-	-	-	M6
		18				180	20		-	-		
24	50	19	16	18	2	160	17	12	-	-	-	M6
		20				210	20		-	-		
		22				280	25		-	-		
30	60	24	18	20	2	270	23	12	-	-	-	M6
		25				320	25		-	-		
		26				360	28		-	-		
36	72	27	20	22	2	440	32	30	-	-	-	M8
		30				610	40		-	-		
		33				820	50		-	-		
44	80	34	22	24	2	690	40	30	-	-	-	M8
		35				770	44		-	-		
		37				920	50		-	-		
50	90	38	23,5	26	2,5	1.110	58	30	1.500	78	35	M8
		40				1.290	65		1.700	85		
		42				1.510	71		1.900	93		
55	100	42	26	29	3	1.230	59	30	1.600	78	35	M8
		45				1.530	68		2.000	88		
		48				1.860	78		2.400	99		
62	110	48	26	29	3	1.670	70	30	2.200	91	35	M8
		50				1.890	76		2.400	98		
		52				2.120	81		2.700	104		
68	115	50	26	29	3	1.870	75	30	2.400	94	35	M8
		55				2.450	89		3.000	111		
		60				3.120	104		3.800	127		
75	138	55	27	31	4	2.330	85	59	3.700	136	70	M10
		60				3.020	101		4.700	157		
		65				3.810	117		5.800	178		
80	145	60	27	31	4	3.190	106	59	4.200	142	70	M10
		65				4.060	123		5.200	161		
		70				4.910	140		6.300	181		
90	155	65	34	38	4	5.400	166	59	5.900	181	70	M10
		70				6.500	187		7.100	203		
		75				7.800	208		8.500	226		
100	170	70	39	43	4	6.000	171	59	7.400	213	70	M10
		75				7.200	192		8.900	237		
		80				8.500	213		10.400	261		
110	185	80	43,5	49	5,5	10.000	249	100	12.600	314	121	M10
		85				11.700	275		14.600	344		
		90				13.600	302		16.900	375		
120	197	85	46,5	53	6,5	11.900	280	100	13.600	320	121	M12
		90				13.800	307		15.700	349		
		95				15.900	334		18.000	378		
125	215	90	46,5	53	6,5	14.400	319	100	16.400	365	121	M12
		95				16.500	347		18.800	395		
		100				18.700	375		21.300	426		
135	230	95	49,5	58	8,5	18.100	382	160	20.300	427	195	M14
		100				20.600	412		23.000	459		
		110				26.000	473		28.900	525		
140	230	100	49,5	58	8,5	19.600	392	160	23.000	459	195	M14
		105				22.100	421		25.800	492		
		115				27.600	481		32.100	558		
155	263	110	53,5	62	8,5	26.500	482	160	31.100	565	195	M14
		115				29.500	514		34.500	601		
		125				36.100	578		42.000	672		
165	290	120	58	68	10	37.300	622	250	44.000	734	300	M16
		125				41.200	659		48.500	776		
		135				49.600	734		58.100	860		
175	300	130	58	68	10	45.000	692	250	54.000	834	300	M16
		135				49.000	730		59.000	876		
		145				58.000	805		70.000	962		

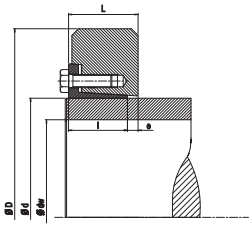

Notes:
Dimensions representing the total length of the hub are indicative; they are calculated according to the geometric rules.

M_S	Screw tightening torque	Nm
M_T	Transmissible torque moment	Nm
F_{ax}	Transmissible axial load	N

SIT-LOCK® 1422-1481

Dimensions						CAL 1422			CAL 1481			Clamping screws DIN 931
d [mm]	**D** [mm]	d_w [mm]	l [mm]	L [mm]	e [mm]	M_T [Nm]	Fax [kN]	Ms [Nm]	M_T [Nm]	Fax [kN]	Ms [Nm]	
185	**320**	140	75	85	10	64.000	916	250	81.000	1.157	300	M16
		145				70.000	961		88.000	1.210		
		155				82.000	1.053		102.000	1.319		
200	**340**	150	75	85	10	81.000	1.073	250	96.000	1.279	300	M16
		155				87.000	1.120		103.000	1.333		
		165				100.000	1.216		119.000	1.442		
220	**370**	160	91	103	12	103.000	1.283	490	129.000	1.615	570	M20
		170				119.000	1.395		149.000	1.749		
		180				136.000	1.509		169.000	1.883		
240	**405**	170	94	107	13	122.000	1.439	490	151.000	1.773	570	M20
		180				140.000	1.555		172.000	1.909		
		200				179.000	1.790		218.000	2.183		
260	**430**	190	105	119	14	163.000	1.715	490	212.000	2.231	570	M20
		200				184.000	1.842		238.000	2.385		
		220				231.000	2.099		297.000	2.696		
280	**460**	210	116	132	16	215.000	2.051	490	279.000	2.661	570	M20
		220				240.000	2.186		311.000	2.825		
		240				295.000	2.458		379.000	3.156		
300	**485**	220	124	140	16	270.000	2.456	840	332.000	3.018	980	M24
		230				300.000	2.605		367.000	3.193		
		250				363.000	2.906		443.000	3.545		
320	**520**	240	124	140	16	301.000	2.511	840	404.000	3.370	980	M24
		250				332.000	2.655		444.000	3.549		
		270				398.000	2.945		528.000	3.911		
340	**570**	250	137	155	18	390.000	3.118	840	488.000	3.905	980	M24
		260				427.000	3.283		533.000	4.101		
		280				506.000	3.617		630.000	4.498		
350	**580**	270	142	162	20	493.000	3.649	840	616.000	4.563	980	M24
		280				535.000	3.825		669.000	4.778		
		290				580.000	4.001		725.000	5.000		
360	**590**	270	142	162	20	496.000	3.676	840	625.000	4.628	980	M24
		280				539.000	3.852		677.000	4.839		
		300				631.000	4.206		790.000	5.264		
380	**640**	290	146	166	20	585.000	4.034	1.250	725.000	5.000	1.450	M27
		300				632.000	4.215		783.000	5.220		
		310				681.000	4.397		844.000	5.445		
390	**650**	290	146	166	20	640.000	4.411	1.250	781.000	5.384	1.450	M27
		300				691.000	4.605		842.000	5.611		
		320				799.000	4.996		971.000	6.069		
420	**670**	320	166	186	20	742.000	4.640	1.250	969.000	6.057	1.450	M27
		330				797.000	4.829		1.038.000	6.290		
		350				912.000	5.209		1.183.000	6.758		
440	**720**	340	174	194	20	945.000	5.557	1.250	1.212.000	7.128	1.450	M27
		350				1.009.000	5.764		1.292.000	7.382		
		370				1.143.000	6.181		1.460.000	7.891		
460	**770**	360	174	194	20	1.104.000	6.133	1.250	1.393.000	7.739	1.450	M27
		370				1.174.000	6.345		1.479.000	7.995		
		390				1.320.000	6.771		1.660.000	8.511		
480	**800**	380	191	213	22	1.300.000	6.843	1.640	1.657.000	8.721	1.970	M30
		390				1.378.000	7.066		1.754.000	8.993		
		410				1.541.000	7.516		1.956.000	9.542		
500	**850**	400	191	213	22	1.496.000	7.478	1.640	1.887.000	9.435	1.970	M30
		410				1.581.000	7.711		1.992.000	9.717		
		430				1.759.000	8.180		2.211.000	10.283		
530	**910**	430	216	238	22	1.930.000	8.976	1.640	2.397.000	11.150	1.970	M30
		440				2.031.000	9.234		2.521.000	11.459		
		460				2.243.000	9.752		2.778.000	12.078		
560	**940**	450	216	238	22	2.097.000	9.318	1.640	2.545.000	11.313	1.970	M30
		460				2.201.000	9.572		2.671.000	11.611		
		480				2.420.000	10.081		2.930.000	12.210		
590	**960**	470	235	260	25	2.593.000	11.032	1.640	2.969.000	12.636	1.970	M30
		480				2.715.000	11.314		3.108.000	12.952		
		500				2.970.000	11.881		3.397.000	13.587		
620	**1.020**	500	261	286	25	2.940.000	11.616	1.640	3.602.000	13.608	1.970	M30
		520				3.169.000			3.708.000	14.261		
		540				3.447.000			4.028.000	14.918		

Notes:
Dimensions representing the total length of the hub are indicative; they are calculated according to the geometric rules.

M_S	Screw tightening torque	Nm
M_T	Transmissible torque moment	Nm
F_{ax}	Transmissible axial load	N

SIT-LOCK®

SIT-LOCK® 1423-1483

Dimensions						CAL 1423			CAL 1483			Clamping screws DIN 931
d [mm]	**D** [mm]	d_W [mm]	l [mm]	L [mm]	e [mm]	M_T [Nm]	Fax [kN]	Ms [Nm]	M_T [Nm]	Fax [kN]	Ms [Nm]	
140	**230**	100	64	74	10	26.000	523	250	30.000	607	300	M16
		105				30.000	562		34.000	650		
		115				37.000	641		42.000	737		
155	**263**	110	70	80	10	36.000	646	250	45.000	810	300	M16
		115				40.000	687		49.000	860		
		125				48.000	772		60.000	959		
165	**290**	120	77	88	11	50.000	828	250	63.000	1.047	300	M16
		125				55.000	877		69.000	1.105		
		135				66.000	977		83.000	1.223		
175	**300**	130	77	88	11	61.000	943	250	73.000	1.121	300	M16
		135				67.000	993		80.000	1.178		
		145				79.000	1.094		94.000	1.292		
185	**320**	140	100	112	12	89.000	1.269	490	106.000	1.512	570	M20
		145				96.000	1.330		115.000	1.582		
		155				113.000	1.455		134.000	1.723		
200	**340**	150	100	112	12	104.000	1.391	490	126.000	1.685	570	M20
		155				113.000	1.453		136.000	1.757		
		165				130.000	1.577		157.000	1.900		
220	**370**	160	121	134	13	127.000	1.591	490	162.000	2.027	570	M20
		165				137.000	1.661		174.000	2.112		
		180				169.000	1.876		213.000	2.366		
240	**405**	170	130	144	14	157.000	1.847	490	206.000	2.424	570	M20
		180				180.000	1.996		235.000	2.607		
		200				230.000	2.300		298.000	2.978		
260	**430**	190	144	160	16	230.000	2.424	490	285.000	3.000	570	M20
		200				260.000	2.600		321.000	3.207		
		220				325.000	2.957		399.000	3.623		
280	**460**	210	156	172	16	306.000	2.918	840	361.000	3.435	980	M24
		220				342.000	3.105		401.000	3.646		
		240				418.000	3.485		489.000	4.074		
300	**485**	230	158	176	18	360.000	3.132	840	461.000	4.013	980	M24
		240				398.000	3.314		508.000	4.230		
		250				437.000	3.498		556.000	4.452		
320	**520**	240	166	184	18	430.000	3.580	840	512.000	4.269	980	M24
		250				473.000	3.781		562.000	4.498		
		270				565.000	4.186		670.000	4.960		
340	**570**	250	186	206	20	551.000	4.407	1250	661.000	5.288	1.450	M27
		260				603.000	4.637		722.000	5.552		
		280				714.000	5.100		852.000	6.086		
360	**590**	270	188	210	22	671.000	4.969	1250	763.000	5.654	1.450	M27
		280				729.000	5.204		828.000	5.914		
		300				852.000	5.679		966.000	6.438		
390	**650**	290	196	220	24	850.000	5.860	1250	978.000	6.743	1.450	M27
		300				917.000	6.116		1.054.000	7.029		
		320				1.061.000	6.633		1.217.000	7.606		
420	**690**	320	221	246	25	1.007.000	6.294	1250	1.297.000	8.106	1.450	M27
		330				1.080.000	6.547		1.389.000	8.416		
		350				1.235.000	7.058		1.582.000	9.040		
440	**750**	340	233	258	25	1.218.000	7.166	1640	1.583.000	9.312	1.970	M30
		350				1.301.000	7.433		1.687.000	9.642		
		370				1.475.000	7.972		1.907.000	10.306		
460	**770**	360	233	258	25	1.402.000	7.791	1640	1.734.000	9.632	1.970	M30
		370				1.491.000	8.062		1.841.000	9.953		
		390				1.678.000	8.606		2.067.000	10.599		
480	**800**	380	270	298	28	1.707.000	8.984	1640	2.076.000	10.926	1.970	M30
		390				1.809.000	9.277		2.198.000	11.270		
		410				2.023.000	9.867		2.452.000	11.961		
500	**850**	400	270	300	30	1.993.000	9.963	1640	2.529.000	12.645	1.970	M30
		410				2.106.000	10.273		2.669.000	13.021		
		430				2.342.000	10.895		2.962.000	13.777		
530	**890**	430	306	338	32	2.549.000	11.857	2210	3.093.000	14.385	2.650	M33
		440				2.683.000	12.196		3.252.000	14.782		
		460				2.962.000	12.878		3.584.000	15.581		
560	**940**	450	306	338	32	2.837.000	12.609	2210	3.439.000	15.284	2.650	M33
		460				2.978.000	12.950		3.607.000	15.683		
		480				3.272.000	13.634		3.956.000	16.485		

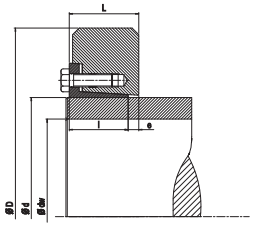

Notes:
Dimensions representing the total length of the hub are indicative; they are calculated according to the geometric rules.

M_S	Screw tightening torque	Nm
M_T	Trasmissible torque moment	Nm
F_{ax}	Transmissible axial load	N

SIT-LOCK® 15 - Self-Centering

Suitable for servomotors and small pulleys. It gives an axial force, similar to the clamp load of the screws, and an axial movement that can be used to set ball bearings.

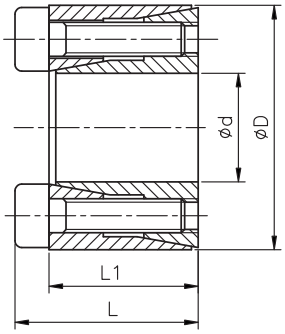

Installation

Carefully clean contact surfaces of shaft and hub. Then, lightly oil both surfaces with standard mineral oil. Position the SIT-LOCK® on the shaft and into the hub machined bore. Align them as required by the application. Gradually and uniformly tighten the locking screws to the tightening torque (Ms).

You must tighten the screws in diametrically opposite sequence in stages:

- hand tighten the screws until the surfaces are in contact
- carefully check the position of the hub on the shaft
- tighten the screws to half the value of the tightening torque (Ms) stated in the catalogue
- repeat the operation until the tightening torque is reached using the dynamometric screw-driver
- check every locking screw to insure it has been tightened to the specific tightening torque

Do not use lubricant like "Molykote" or molybdenum disulfide based oils.

Removal

Gradually loosen the clamping screws. Transfer the screws into the releasing tapped holes and tighten them until the front cone is released. Loosen the clamping screws again. Transfer the clamping screws into the releasing holes of the intermediate ring, and tighten them until the back cone is released.

Note: To reuse the locking element, carefully oil the screws and the conical surfaces, then follow installation instructions.

Concentricity

For self-centering locking assemblies, the clamping element has a centering effect and the concentricity error can be considered 0.02-0.04 mm.

Maximum allowable roughness
Rt 16 µm
Maximum recommended tolerance
shaft h 8 - hub H 8

SIT-LOCK® 15

Dimensins [mm]					Performances		Pressure [N/mm²]		Clamping screws (DIN 912 - 12,9)		
d x D	d	D	L	L_1	M_T [Nm]	F_{ax} [kN]	p_w	p_n	N°	Type	M_s [Nm]
5 x 16	5	16	13,5	11	7	3	190	60	3	M2,5 x 10	1,2
6 x 16	6	16	13,5	11	9	3	160	60	3	M2,5 x 10	1,2
6,35 x 16	6,35	16	13,5	11	9	3	150	60	3	M2,5 x 10	1,2
7 x 17	7	17	13,5	11	10	3	140	60	3	M2,5 x 10	1,2
8 x 18	8	18	13,5	11	11	3	120	55	3	M2,5 x 10	1,2
9 x 20	9	20	15,0	13	17	3	120	55	4	M2,5 x 12	1,2
9,53 x 20	9,53	20	15,0	13	17	3	115	55	4	M2,5 x 12	1,2
10 x 20	10	20	15,5	13	19	3	110	55	4	M2,5 x 12	1,2
11 x 22	11	22	15,5	13	21	3	100	50	4	M2,5 x 12	1,2
12 x 22	12	22	15,5	13	23	3	90	50	4	M2,5 x 12	1,2
14 x 26	14	26	20,0	17	40	6	95	50	4	M3 x 16	2,1
15 x 28	15	28	20,0	17	43	6	90	50	4	M3 x 16	2,1
16 x 32	16	32	21,0	17	80	10	150	70	4	M4 x 16	4,9
17 x 35	17	35	25,0	21	85	10	110	55	4	M4 x 20	4,9
18 x 35	18	35	25,0	21	90	10	105	55	4	M4 x 20	4,9
19 x 35	19	35	25,0	21	95	10	100	55	4	M4 x 20	4,9
20 x 38	20	38	26,0	21	165	16	155	80	4	M5 x 20	10
22 x 40	22	40	26,0	21	180	16	140	75	4	M5 x 20	10
24 x 47	24	47	32,0	26	280	23	145	75	4	M6 x 24	17
25 x 47	25	47	32,0	26	290	23	140	75	4	M6 x 24	17
28 x 50	28	50	32,0	26	485	35	180	100	6	M6 x 24	17
30 x 55	30	55	32,0	26	520	35	170	95	6	M6 x 24	17
32 x 55	32	55	32,0	26	555	35	165	95	6	M6 x 24	17
35 x 60	35	60	37,0	31	810	46	170	100	8	M6 x 28	17
38 x 65	38	65	37,0	31	880	46	155	90	8	M6 x 28	17
40 x 65	40	65	37,0	31	925	46	150	90	8	M6 x 28	17
42 x 75	42	75	44,0	36	1350	64	170	95	6	M8 x 34	41
45 x 75	45	75	44,0	36	1450	64	160	95	6	M8 x 34	41
48 x 80	48	80	44,0	36	2050	85	190	110	8	M8 x 34	41
50 x 80	50	80	44,0	36	2140	85	190	110	8	M8 x 34	41

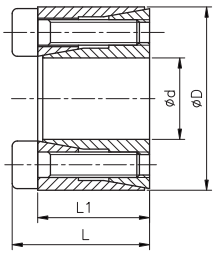

Notes:
Dimensions representing the total length of the hub are indicative; they are calculated according to the geometric rules.

M_S	Screw tightening torque	Nm
M_T	Transmissible torque moment	Nm
F_{ax}	Transmissible axial load	N
p_w	Shaft pressure	N/mm^2
p_n	Hub pressure	N/mm^2

Design of hub outside minimum diameter

When using the locking units, the shaft-hub connection is characterized by a pressure on the hub surface, which is exerted by the locking unit outer ring when the clamping screws are tightened to the stated value. It is important to design correctly the hub outside diameter. The following table summarizes the procedure as a simple calculation. To determine the hub outside minimum diameter, simply multiply the factor K by the SIT-LOCK® outside diameter to obtain the hub outside minimum diameter. The factor K varies depending on the yield limit of hub material, the hub surface pressure (Pn) and the factor (x), variable according to the application type (A, B, C).

Installation type A ($L_M \cong L_C$)
X = 1

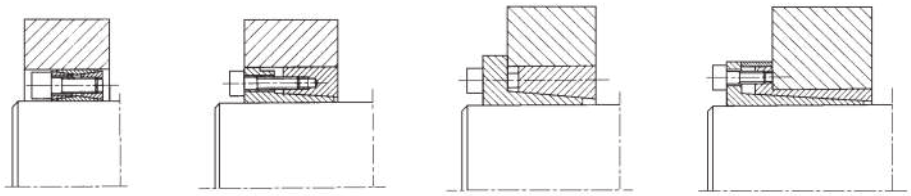

Installation type B ($L_M \cong 2\ L_C$)
X = 0,8

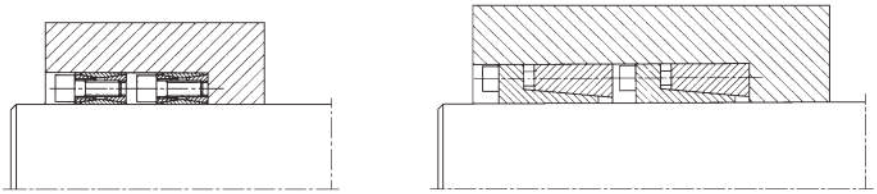

Installation type C ($L_M > 2\ L_C$)
X = 0,6

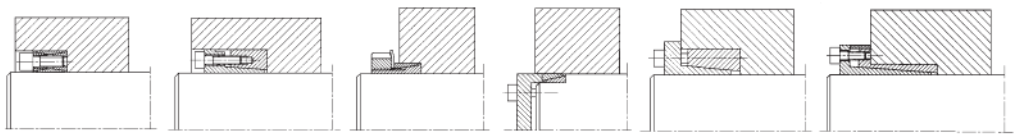

Hub min diameter D x K
for: K = factor stated in the table
D = SIT-LOCK® outside diameter

L_M	Hub length	mm
L_c	SIT-LOCK® length	mm

Hollow shaft

For application with locking-assemblies on hollow shaft, it is important to scale both hub minimum diameter and hollow shaft diameter. Contact our Technical Department for design.

Coefficient K

Hub surface pressure		Yield limit of hub material σ_{02} [N/mm²]										
		150	180	200	220	250	270	300	350	400	450	600
		Hub material										
p_n [N/mm²]	Application	GG 20	GG 25 GS 38	GG 30 GTS 35	GS 45 ST 37-2	GG 40 GS 52	ST 50-2 C 35	GG 50 GS 60 ST 60-2	GG 60 GS 62 ST 70-2	GG 70 GS 70 C 60	Heat treatment steel	
60	C	1,29	1,26	1,21	1,19	1,16	1,15	1,13	1,11	1,10	1,09	1,07
	B	1,40	1,31	1,25	1,24	1,23	1,21	1,19	1,16	1,13	1,12	1,09
	A	1,53	1,43	1,37	1,33	1,29	1,26	1,23	1,19	1,17	1,15	1,11
65	C	1,31	1,26	1,23	1,21	1,19	1,16	1,14	1,12	1,11	1,10	1,08
	B	1,45	1,36	1,31	1,29	1,25	1,23	1,21	1,17	1,15	1,13	1,10
	A	1,61	1,46	1,41	1,36	1,31	1,29	1,25	1,21	1,19	1,17	1,13
70	C	1,35	1,27	1,25	1,23	1,19	1,17	1,16	1,13	1,12	1,11	1,08
	B	1,49	1,39	1,35	1,31	1,26	1,24	1,21	1,19	1,16	1,14	1,11
	A	1,66	1,51	1,46	1,41	1,35	1,31	1,26	1,23	1,21	1,18	1,14
75	C	1,31	1,29	1,26	1,24	1,21	1,19	1,16	1,15	1,13	1,12	1,09
	B	1,53	1,43	1,37	1,33	1,29	1,26	1,23	1,19	1,17	1,15	1,12
	A	1,75	1,56	1,49	1,43	1,37	1,34	1,31	1,26	1,21	1,19	1,14
80	C	1,40	1,32	1,29	1,26	1,22	1,21	1,19	1,16	1,14	1,12	1,09
	B	1,59	1,46	1,40	1,36	1,31	1,28	1,25	1,21	1,19	1,16	1,12
	A	1,82	1,62	1,54	1,47	1,40	1,37	1,32	1,27	1,23	1,21	1,15
85	C	1,43	1,35	1,31	1,28	1,24	1,22	1,20	1,17	1,15	1,13	1,10
	B	1,64	1,50	1,43	1,39	1,33	1,30	1,27	1,23	1,20	1,17	1,13
	A	1,91	1,68	1,58	1,51	1,43	1,40	1,35	1,29	1,25	1,22	1,16
90	C	1,47	1,37	1,33	1,29	1,26	1,23	1,21	1,18	1,16	1,14	1,10
	B	1,70	1,54	1,47	1,41	1,35	1,32	1,29	1,24	1,21	1,19	1,14
	A	2,01	1,74	1,63	1,55	1,47	1,42	1,37	1,31	1,27	1,23	1,17
95	C	1,50	1,40	1,35	1,31	1,27	1,25	1,22	1,19	1,16	1,15	1,11
	B	1,76	1,58	1,50	1,44	1,38	1,35	1,31	1,26	1,22	1,20	1,15
	A	2,12	1,81	1,69	1,60	1,50	1,45	1,40	1,33	1,28	1,25	1,18
100	C	1,54	1,42	1,37	1,33	1,29	1,26	1,23	1,20	1,17	1,15	1,12
	B	1,82	1,62	1,54	1,47	1,40	1,37	1,32	1,27	1,23	1,21	1,15
	A	2,25	1,88	1,74	1,64	1,54	1,49	1,42	1,35	1,30	1,26	1,19
105	C	1,57	1,45	1,40	1,35	1,30	1,28	1,25	1,21	1,18	1,16	1,12
	B	1,89	1,67	1,57	1,51	1,43	1,39	1,34	1,29	1,25	1,22	1,16
	A	2,39	1,96	1,80	1,69	1,57	1,52	1,45	1,37	1,32	1,28	1,20
110	C	1,61	1,48	1,42	1,37	1,32	1,29	1,26	1,22	1,19	1,17	1,13
	B	1,97	1,72	1,61	1,54	1,45	1,41	1,36	1,30	1,26	1,23	1,17
	A	2,56	2,05	1,87	1,74	1,61	1,55	1,48	1,39	1,34	1,29	1,21
115	C	1,65	1,51	1,44	1,37	1,34	1,31	1,27	1,23	1,20	1,18	1,13
	B	2,05	1,77	1,65	1,57	1,48	1,44	1,38	1,32	1,27	1,24	1,18
	A	2,76	2,14	1,94	1,80	1,65	1,59	1,51	1,42	1,35	1,31	1,22
120	C	1,70	1,54	1,47	1,40	1,35	1,32	1,29	1,24	1,21	1,19	1,14
	B	2,14	1,82	1,70	1,61	1,51	1,46	1,40	1,34	1,29	1,25	1,19
	A	3,01	2,25	2,01	1,85	1,70	1,62	1,54	1,44	1,37	1,32	1,23
125	C	1,74	1,57	1,49	1,44	1,37	1,34	1,30	1,25	1,22	1,19	1,14
	B	2,25	1,88	1,74	1,64	1,54	1,49	1,42	1,35	1,30	1,26	1,19
	A	3,33	2,36	2,09	1,92	1,74	1,66	1,57	1,46	1,39	1,34	1,25
130	C	1,79	1,60	1,52	1,46	1,39	1,36	1,31	1,26	1,23	1,20	1,15
	B	2,36	1,94	1,79	1,68	1,57	1,51	1,45	1,37	1,31	1,28	1,20
	A	3,75	2,50	2,18	1,98	1,79	1,70	1,60	1,49	1,41	1,36	1,26
135	C	1,84	1,62	1,55	1,48	1,41	1,37	1,33	1,28	1,24	1,21	1,16
	B	2,49	2,01	1,84	1,72	1,60	1,54	1,47	1,39	1,33	1,29	1,21
	A	4,37	2,66	2,28	2,05	1,84	1,74	1,63	1,51	1,43	1,37	1,27
140	C	1,89	1,67	1,57	1,51	1,43	1,39	1,34	1,29	1,25	1,22	1,16
	B	2,64	2,08	1,89	1,76	1,63	1,55	1,49	1,40	1,34	1,30	1,22
	A	5,40	2,84	2,39	2,13	1,89	1,79	1,67	1,54	1,45	1,39	1,28
145	C	1,95	1,70	1,60	1,53	1,45	1,41	1,36	1,30	1,26	1,23	1,17
	B	2,81	2,16	1,95	1,81	1,66	1,59	1,51	1,42	1,36	1,31	1,23
	A	7,67	3,06	2,51	2,22	1,95	1,83	1,70	1,56	1,47	1,41	1,29
150	C	2,01	1,74	1,63	1,55	1,47	1,42	1,37	1,31	1,27	1,24	1,17
	B	3,01	2,25	2,01	1,85	1,70	1,62	1,54	1,44	1,37	1,32	1,24
	A	—	3,33	2,66	2,31	2,01	1,88	1,74	1,59	1,49	1,42	1,30
155	C	2,07	1,78	1,66	1,58	1,49	1,44	1,39	1,32	1,28	1,25	1,18
	B	3,26	2,34	2,07	1,90	1,73	1,66	1,56	1,46	1,39	1,34	1,24
	A	—	3,67	2,81	2,41	2,07	1,93	1,78	1,62	1,52	1,44	1,31
160	C	2,14	1,82	1,70	1,61	1,51	1,46	1,40	1,34	1,29	1,25	1,19
	B	3,56	2,44	2,14	1,95	1,77	1,68	1,59	1,48	1,40	1,35	1,25
	A	—	4,13	3,01	2,53	2,14	1,99	1,82	1,65	1,54	1,48	1,32
165	C	2,22	1,87	1,73	1,63	1,53	1,48	1,42	1,35	1,30	1,26	1,19
	B	3,97	2,56	2,22	2,01	1,81	1,72	1,61	1,50	1,42	1,36	1,26
	A	—	4,81	3,24	2,66	2,22	2,05	1,87	1,68	1,56	1,48	1,34

Note: p_n is stated in the dimensional table of each of the locking assemblies. Installation type (A, B, C) are stated in the previous page.

Example of calculation procedure

Design data
- Power transmission element to be connected: V-pulley
- Shaft diameter: 50 mm
- Maximum Torque in operation (Ma): 1.500 Nm
- V-pulley material: cast iron GG20
- Yield limit of V-pulley material: 150 N/mm²

Calculation
- SIT-LOCK® type: for this kind of applcation SIT-LOCK® 1 is suggested
- Size selection: 50 x 80 mm (see table SIT-LOCK® 1)
- Performance control: verify $M_T \geq Ma$
  From the table obtain M_T = 1.889 Nm, so the above condition is verified
- Tolerance: h11 for the shaft - H11 for the SIT-LOCK® bore
- Roughness: $R_t \leq 16$
- Screws tightening torque: M_s = 37 Nm (see table SIT-LOCK® 1)
- Hub surface pressure: from the table you can find the value P_n = 125 N/mm²
- Application type: in this case it is preferable to adopt the application "C" with the centering guide between shaft and hub

- Coefficient K : obtained through the table "Coefficient K" by considering the following information:
  - yield limit of hub material = 150 N/mm²
  - hub surface pressure = 125 N/mm²
  - installation C

  Then, K = 1,74

- Hub outside minimum diameter:

  Hub $D_{min} \geq D \cdot K$

  for

  - D = SIT-LOCK® outside diameter [mm]
  - K = 1,74

  Then, hub D_{min} = (80 • 1,74) = **140 [mm]**

DIN 912

Screw diameter	P_v [N]			M_s [Nm]		
	8,8	**10,9**	**12,9**	**8,8**	**10,9**	**12,9**
M2,5	1.600	2.140	2.565	0,76	1,0	1,2
M3	2.210	3.110	3.730	1,3	1,9	2,2
M4	3.900	5.450	6.550	2,9	4,1	4,9
M5	6.350	8.950	10.700	6	8,5	10
M6	9.000	12.600	15.100	10	14	17
M7	13.200	18.500	22.200	16	23	28
M8	16.500	23.200	27.900	25	35	41
M9	22.000	30.900	37.100	36	51	61
M10	26.200	36.900	44.300	49	69	83
M12	38.300	54.000	64.500	86	120	145
M14	52.500	74.000	88.500	135	190	230
M16	73.000	102.000	123.000	210	295	355
M18	88.000	124.000	148.000	290	405	485
M20	114.000	160.000	192.000	410	580	690
M22	141.000	199.000	239.000	550	780	930
M24	164.000	230.000	276.000	710	1.000	1.200
M27	215.000	302.000	363.000	1.050	1.500	1.800
M30	262.000	368.000	442.000	1.450	2.000	2.400

SERLOCK®

Patent Pending

SERLOCK®

Contents

SERLOCK®

SERLOCK® is the new patented, keyless self locking bushing for immediate use with all power transmission components suitable for the SER-SIT®, T/L or similar tapered bushings:

- Is directly interchangeable with SER-SIT® or T/L tapered bushings
- Available in 1108, 1210, 1610, 2012, 2517, 3020 sizes
- With bore diameters from 12 to 70 mm according to the bush sizes
- Allows infinite axial and angular adjustments

SERLOCK® is an innovative clamping system which combines all the advantages of SIT-LOCK® friction keyless bushings with the extensive availability of a wide range of PT components for tapered bushings such as:

- V and Poly-V Pulleys
- Timing Pulleys
- Couplings
- Sprockets

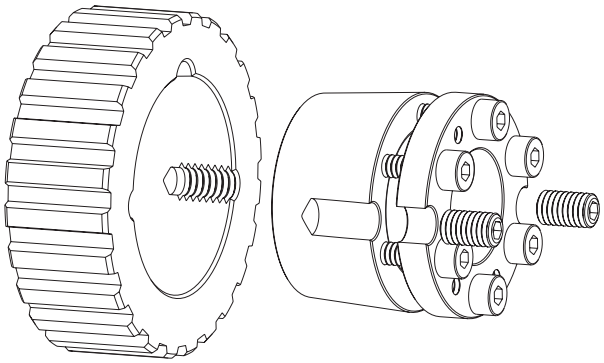

SERLOCK® eliminates:

- All problems related to conventional keyway systems (backlash, breakage, fretting corrosion, difficult disassembly, restrained axial and angular positioning of the component on the shaft);
- Additional machining on the component to be fixed on the shaft, required when using conventional cone/clamping elements.

With the following benefits:

- Immediate availability of the system (element to be clamped + advanced clamping system);
- Easy assembly and disassembly;
- Possibility of reducing the diameter of the shafts used by up to 25%;
- Easy angular and axial adjustment of the component with respect to the shaft;
- Possibility of using SERLOCK® also on shafts with keyway.

All this means an immediate advantage for the user as a result of the potential increase in productivity.

Order form

SERLOCK® **SL 1108 F10**

SL: SERLOCK®

Size

F...: bore diameter [mm]

Assembly is extremely simple and fast:

1) Couple the SERLOCK® bushing to the hub by means of the two set screws;
2) Position the part on the shaft in the required axial and angular position;
3) Gradually tighten the set screws until the torque Ms, indicated in the technical tables, is achieved;
4) Tighten the clamping screws gradually and evenly according to the cross outline until the torque Ms, indicated in the technical tables is achieved.

Note:
Do not lubricate the SERLOCK® bushing or the shaft on which it is mounted.

To disassemble:

1) Disassemble the tightening screws;
2) Insert the screws in the threaded disassembly holes, tightening them until the tapered bushing is released;

In order to remove the outer ring, if necessary:

3) After having removed the inner bushing, loosen the set screws;
4) Keeping the loosened set screws in place, position the inner bushing rotated 30° in relation to the original position;
5) Insert the screws and tighten them gradually until the inner ring is released.

Dimensions and performances of standard types

For different bore, sizes, or hollow shaft application, please contact our Technical Dept.

Shaft tolerance h8 or better if not otherwise specified, are shown in mm dimensions.

SERLOCK® 1108

Type	Dimensions [mm]					Performances		Screws				Setscrews			
	d	H	H1	H2	D	M_T [Nm]	F_{ax} [N]	N°	Type	M_s	Key	N°	Type	M_s	Key
SL1108F12	12	20	29,5	33,5	39	109	18200	6	M4	4,9	3	2	1/4 W	4,9	3
SL1108F14	14	20	29,5	33,5	39	128	18200	6	M4	4,9	3	2	1/4 W	4,9	3
SL1108F15	15	20	29,5	33,5	39	137	18200	6	M4	4,9	3	2	1/4 W	4,9	3
SL1108F16	16	20	29,5	33,5	39	146	18200	6	M4	4,9	3	2	1/4 W	4,9	3
SL1108F18	18	20	29,5	33,5	39	164	18200	6	M4	4,9	3	2	1/4 W	4,9	3
SL1108F19	19	20	29,5	33,5	39	173	18200	6	M4	4,9	3	2	1/4 W	4,9	3
SL1108F20	20	20	29,5	33,5	39	182	18200	6	M4	4,9	3	2	1/4 W	4,9	3
SL1108F22	22	20	29,5	33,5	39	201	18200	6	M4	4,9	3	2	1/4 W	4,9	3

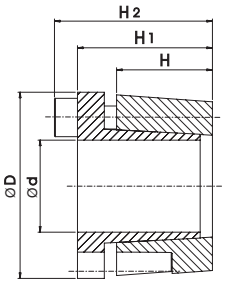

SERLOCK® 1210

Type	Dimensions [mm]					Performances		Screws				Setscrews			
	d	H	H1	H2	D	M_T [Nm]	F_{ax} [N]	N°	Type	M_s	Key	N°	Type	M_s	Key
SL1210F14	14	25	37,5	43,5	49	246	35100	6	M6	14	5	2	3/8 W	14	5
SL1210F15	15	25	37,5	43,5	49	263	35100	6	M6	14	5	2	3/8W	14	5
SL1210F16	16	25	37,5	43,5	49	281	35100	6	M6	14	5	2	3/8 W	14	5
SL1210F18	18	25	37,5	43,5	49	316	35100	6	M6	14	5	2	3/8W	14	5
SL1210F19	19	25	37,5	43,5	49	333	35100	6	M6	14	5	2	3/8 W	14	5
SL1210F20	20	25	37,5	43,5	49	351	35100	6	M6	14	5	2	3/8W	14	5
SL1210F22	22	25	37,5	43,5	49	386	35100	6	M6	14	5	2	3/8 W	14	5
SL1210F24	24	25	37,5	43,5	49	421	35100	6	M6	14	5	2	3/8W	14	5
SL1210F25	25	25	37,5	43,5	49	438	35100	6	M6	14	5	2	3/8W	14	5

SERLOCK® 1610

Type	Dimensions [mm]					Performances		Screws				Setscrews			
	d	H	H1	H2	D	M_T [Nm]	F_{ax} [N]	N°	Type	M_s	Key	N°	Type	M_s	Key
SL1610F14	14	25	37,5	43,5	59	246	35100	6	M6	14	5	2	3/8 W	14	5
SL1610F15	15	25	37,5	43,5	59	263	35100	6	M6	14	5	2	3/8W	14	5
SL1610F16	16	25	37,5	43,5	59	281	35100	6	M6	14	5	2	3/8 W	14	5
SL1610F18	18	25	37,5	43,5	59	316	35100	6	M6	14	5	2	3/8W	14	5
SL1610F19	19	25	37,5	43,5	59	333	35100	6	M6	14	5	2	3/8 W	14	5
SL1610F20	20	25	37,5	43,5	59	351	35100	6	M6	14	5	2	3/8W	14	5
SL1610F22	22	25	37,5	43,5	59	386	35100	6	M6	14	5	2	3/8 W	14	5
SL1610F24	24	25	37,5	43,5	59	421	35100	6	M6	14	5	2	3/8W	14	5
SL1610F25	25	25	37,5	43,5	59	438	35100	6	M6	14	5	2	3/8W	14	5
SL1610F26	26	25	37,5	43,5	59	456	35100	6	M6	14	5	2	3/8W	14	5
SL1610F28	28	25	37,5	43,5	59	491	35100	6	M6	14	5	2	3/8 W	14	5
SL1610F30	30	25	37,5	43,5	59	526	35100	6	M6	14	5	2	3/8W	14	5
SL1610F32	32	25	37,5	43,5	59	561	35100	6	M6	14	5	2	3/8 W	14	5
SL1610F35	35	25	34,8	40,8	59	614	35100	6	M6	14	5	2	3/8W	14	5

M_T	Transmissible torque moment	Nm
M_S	Screw tightening torque	Nm
F_{ax}	Transmissible axial load	N

SERLOCK® 2012

Type	Dimensions [mm]					Performances		Screws				Setscrews			
	d	H	H1	H2	D	M_T [Nm]	F_{ax} [N]	N°	Type	M_s	Key	N°	Type	M_s	Key
SL2012F19	19	30	45,5	53,5	71	436	45900	6	M8	25	6	2	7/16 W	25	6
SL2012F20	20	30	45,5	53,5	71	459	45900	6	M8	25	6	2	7/16 W	25	6
SL2012F22	22	30	45,5	53,5	71	505	45900	6	M8	25	6	2	7/16 W	25	6
SL2012F24	24	30	45,5	53,5	71	551	45900	6	M8	25	6	2	7/16 W	25	6
SL2012F25	25	30	45,5	53,5	71	574	45900	6	M8	25	6	2	7/16 W	25	6
SL2012F26	26	30	45,5	53,5	71	597	45900	6	M8	25	6	2	7/16 W	25	6
SL2012F28	28	30	45,5	53,5	71	643	45900	6	M8	25	6	2	7/16 W	25	6
SL2012F30	30	30	45,5	53,5	71	689	45900	6	M8	25	6	2	7/16 W	25	6
SL2012F32	32	30	45,5	53,5	71	735	45900	6	M8	25	6	2	7/16 W	25	6
SL2012F35	35	30	45,5	53,5	71	804	45900	6	M8	25	6	2	7/16 W	25	6
SL2012F38	38	30	45,5	53,5	71	873	45900	6	M8	25	6	2	7/16 W	25	6
SL2012F40	40	30	45,5	53,5	71	919	45900	6	M8	25	6	2	7/16 W	25	6
SL2012F42	42	30	45,5	53,5	71	965	45900	6	M8	25	6	2	7/16 W	25	6

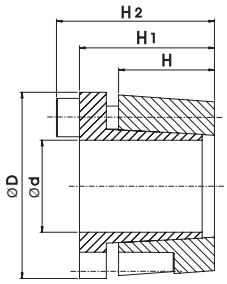

SERLOCK® 2517

Type	Dimensions [mm]					Performances		Screws				Setscrews			
	d	H	H1	H2	D	M_T [Nm]	F_{ax} [N]	N°	Type	Ms	Key	N°	Type	M_s	Key
SL2517F24	24	45	60,5	68,5	86	551	45900	6	M8	25	6	2	1/2 W	35	6
SL2517F25	25	45	60,5	68,5	86	574	45900	6	M8	25	6	2	1/2 W	35	6
SL2517F26	26	45	60,5	68,5	86	597	45900	6	M8	25	6	2	1/2 W	35	6
SL2517F28	28	45	60,5	68,5	86	643	45900	6	M8	25	6	2	1/2 W	35	6
SL2517F30	30	45	60,5	68,5	86	689	45900	6	M8	25	6	2	1/2 W	35	6
SL2517F 32	32	45	60,5	68,5	86	735	45900	6	M8	25	6	2	1/2 W	35	6
SL2517F35	35	45	60,5	68,5	86	804	45900	6	M8	25	6	2	1/2 W	35	6
SL2517F38	38	45	60,5	68,5	86	873	45900	6	M8	25	6	2	1/2 W	35	6
SL2517F40	40	45	60,5	68,5	86	919	45900	6	M8	25	6	2	1/2 W	35	6
SL2517F42	42	45	60,5	68,5	86	965	45900	6	M8	25	6	2	1/2 W	35	6
SL2517F45	45	45	60,5	68,5	86	1034	45900	6	M8	25	6	2	1/2 W	35	6
SL2517F48	48	45	60,5	68,5	86	1103	45900	6	M8	25	6	2	1/2 W	35	6
SL2517F50	50	45	60,5	68,5	86	1148	45900	6	M8	25	6	2	1/2 W	35	6
SL2517F55	55	45	60,5	68,5	86	1263	45900	6	M8	25	6	2	1/2 W	35	6

SERLOCK® 3020

Type	Dimensions [mm]					Performances		Screws				Setscrews			
	d	H	H1	H2	D	M_T [Nm]	F_{ax} [N]	N°	Type	Ms	Key	N°	Type	M_s	Key
SL3020F30	30	50	68,5	78,5	108	993	66200	6	M10	49	8	2	5/8 W	65	8
SL3020F32	32	50	68,5	78,5	108	1059	66200	6	M10	49	8	2	5/8 W	65	8
SL3020F35	35	50	68,5	78,5	108	1159	66200	6	M10	49	8	2	5/8 W	65	8
SL3020F38	38	50	68,5	78,5	108	1258	66200	6	M10	49	8	2	5/8 W	65	8
SL3020F40	40	50	68,5	78,5	108	1324	66200	6	M10	49	8	2	5/8 W	65	8
SL3020F42	42	50	68,5	78,5	108	1391	66200	6	M10	49	8	2	5/8 W	65	8
SL3020F45	45	50	68,5	78,5	108	1490	66200	6	M10	49	8	2	5/8 W	65	8
SL3020F48	48	50	68,5	78,5	108	1589	66200	6	M10	49	8	2	5/8 W	65	8
SL3020F50	50	50	68,5	78,5	108	1655	66200	6	M10	49	8	2	5/8 W	65	8
SL3020F55	55	50	68,5	78,5	108	1821	66200	6	M10	49	8	2	5/8 W	65	8
SL3020F60	60	50	68,5	78,5	108	1986	66200	6	M10	49	8	2	5/8 W	65	8
SL3020F65	65	50	68,5	78,5	108	2152	66200	6	M10	49	8	2	5/8 W	65	8
SL3020F70	70	50	68,5	78,5	108	2318	66200	6	M10	49	8	2	5/8 W	65	8

M_T	Transmissible torque moment	Nm
M_S	Screw tightening torque	Nm
F_{ax}	Transmissible axial load	N

Precision Universal Joint

PRECISION UNIVERSAL JOINT

Contents

Sit universal joints with plain or needle roller bearings
Series “P” - “E” - “H” (DIN 808)

P series joints are precision products made by 4 forks and solid pins machined from one piece, to have an extremely compact central block.Types E are with sliding bushes while type H has needle roller bearings.

It’s produced in one only version:
- **P series according with DIN 808;**

Joints with plain bearings are available in 2 versions:
- **E series according with DIN 808;**
- **EB series according with DIN 808/7551**

Joints with roller bearings are available in 2 versions:
- **H series according with DIN 808;**
- **HB series according with DIN 808/7551**

Every execution is made by 2 hubs with forks and a central block. Between pins and bores there are:

- P series: 4 bearings with solid pins
- E series: with sliding bushes
- H series: with needle roller bearings

In the central blocks of P and E series there are the holes for the lubrication.
For the H series (for high speed applications) no lubrication is needed, because the roller bearing are maintenance free.

P series joints is designed for high precision and lifetime applications.
E series joint with sliding bushes are used for low-medium speed and when some shock load can occur.
For high speed and medium torque, we suggest the type H with roller bearings.
The maximum working angle is 45° for single joints, 90° for double joints.
The maximum speed is 1000 rpm for P and E series, 4000 rpm for H series.
Every execution can be supply with extensible shaft.

Precision joint
Series “P” (DIN 808)

- Central block and forks from one piece of Ni-Cr cemented steel (HRC > 60)
- High wear resistance
- Long life
- Pre-lubricated with greaser built-in
- Max angle: 45°
- Max speed: 1000 rpm
- Standard execution: bore and keyway
- Special executions on request

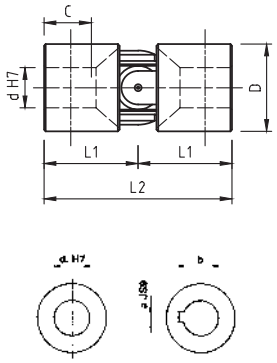

Type	d [mm]	a [mm]	b [mm]	D [mm]	L1 [mm]	C [mm]	L2 [mm]	Weight [kg]
GU01P	6	-	-	16	17	9	34	0,05
GU02P	8	-	-	18	20	11	40	0,06
GU03P	10	3	11,4	22	24	14	48	0,11
GU04P	12	4	13,8	26	28	16	56	0,17
GU05P	14	5	16,3	29	30	17	60	0,22
GU1P	16	5	18,3	32	34	20	68	0,32
GU2P	18	6	20,8	37	37	21	74	0,47
GU3P	20	6	22,8	42	41	23	82	0,67
GU4P	22	6	24,8	47	47,5	25	95	1,00
GU5P	25	8	28,3	52	54	29	105	1,35
GU6P	30	8	33,3	58	61	34	122	1,85

Precision joint
Series “E” (DIN 808)

- Wear resistant sliding bushes from cemented and hardened steel.
- Strong, precise, and versatile; wide application field.
- Max. angle: 45° type “E”, 90° type “ED”. max. speed 1.000 rpm.
- Max. temperature 150 °C
- Special executions upon request.

E **ED**

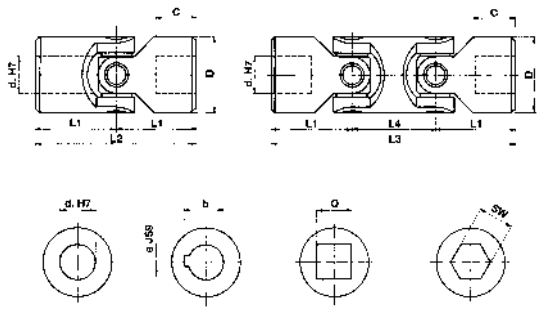

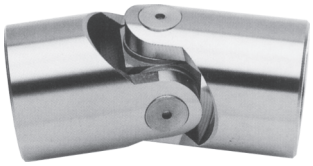

Type	Type	d [mm]	D [mm]	L2 [mm]	L1 [mm]	C [mm]	L4 [mm]	L3 [mm]	a [mm]	b [mm]	Q [mm]	SW [mm]	Weight [kg]		
													E	ED	
GU01E	**GU01ED**	6	16	34	17	8	22	56	2	7	6	6	0,05	0,08	DIN 808
GU02E	**GU02ED**	8	16	40	20	11	22	62	2	9	8	8	0,05	0,08	
GU03E	**GU03ED**	10	22	48	24	12	26	74	3	11,4	10	10	0,10	0,15	
GU04E	**GU04ED**	12	25	56	28	13	30	86	4	13,8	12	12	0,16	0,25	
GU05E	**GU05ED**	14	28	60	30	14	36	96	5	16,3	14	14	0,20	0,40	
GU1E	**GU1ED**	16	32	68	34	16	36	104	5	18,3	16	16	0,30	0,45	
GU2E	**GU2ED**	18	36	74	37	17	40	114	6	20,8	18	18	0,45	0,70	
GU3E	**GU3ED**	20	42	82	41	18	46	128	6	22,8	20	20	0,60	1,00	
GU4E	**GU4ED**	22	45	95	47,5	22	50	145	6	24,8	22	22	0,95	1,55	
GU5E	**GU5ED**	25	50	108	54	26	55	163	8	28,3	25	25	1,20	2,00	
GU6E	**GU6ED**	30	58	122	61	29	68	190	8	33,3	30	30	1,85	2,90	
GU6E1	**GU6ED1**	32	58	130	65	33	68	198	10	35,3	30	30	2,00	3,00	
GU7E	**GU7ED**	35	70	140	70	35	72	212	10	38,3	••	••	3,15	4,75	
GU8E	**GU8ED**	40	80	160	80	39	85	245	12	43,3	••	••	4,60	7,20	
GU9E	**GU9ED**	50	95	190	95	46	100	290	14	53,8	••	••	7,60	12,00	

Type	Type	d [mm]	D [mm]	L2 [mm]	L1 [mm]	C [mm]	L4 [mm]	L3 [mm]	a [mm]	b [mm]	Q [mm]	SW [mm]	Weight [kg]		
													E	ED	
GU03EB	**GU03EBD**	10	16	52	26	15	22	74	3	11,4	8	8	0,05	0,08	DIN 808/7551
GU04EB	**GU04EBD**	12	22	62	31	18	26	88	4	13,8	10	10	0,12	0,20	
GU1EB	**GU1EBD**	16	25	74	37	21	30	104	5	18,3	12	12	0,20	0,30	
GU3EB	**GU3EBD**	20	32	86	43	24	38	124	6	22,8	16	16	0,35	0,50	
GU5EB	**GU5EBD**	25	42	108	54	31	48	156	8	28,3	20	20	0,80	1,20	
GU6EB	**GU6EBD**	30	50	132	66	38	56	188	8	33,3	25	25	1,20	1,70	
GU8EB	**GU8EBD**	40	70	166	83	47	72	238	12	43,3	••	••	2,90	4,30	

•• = upon request

Extensible transmissions
Series “E” (DIN 808)

- Joints series “E” type “EA” with wear resistant sliding bushes.
- Min. and max. length upon request:

$$L_{MIN} \geq \frac{L_{MAX} + 2\,L2 + B}{2} \qquad \text{Corsa } X \leq \frac{L_{MAX} - 2\,L2 - B}{2}$$

- Special execution upon request

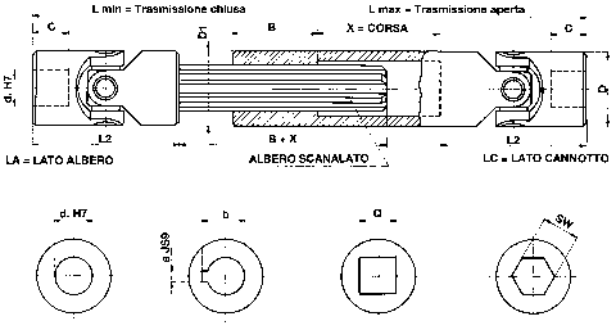

Type	d [mm]	D [mm]	L2 [mm]	C [mm]	Lmin [mm]	Lmax [mm]	X [mm]	B [mm]	a [mm]	b [mm]	Q [mm]	SW [mm]	Shaft profile	D1 [mm]	Weight [kg]
GU01EA	6	16	34	8	••	••	••	25	2	7	6	6	SW 8	16	-
GU02EA	8	16	40	11	••	••	••	25	2	9	8	8	SW 8	16	-
GU03EA	10	22	48	12	140	170	30	30	3	11,4	10	10	11 x 14 Z6	22	0,310
					160	200	40								0,360
					180	240	60								0,380
					230	330	100								0,500
GU04EA	12	25	56	13	160	190	30	40	4	13,8	12	12	13 x 16 Z6	26	0,500
					180	225	45								0,560
					200	270	70								0,620
					220	300	80								0,670
					250	355	105								0,760
					280	420	140								0,840
					300	450	150								0,900
GU05EA	14	28	60	14	170	200	30	40	5	16,3	14	14	13 x 16 Z6	29	0,620
					180	220	40								0,640
					200	260	60								0,720
					220	300	80								0,780
					250	350	100								0,870
					280	420	140								0,960
					300	450	150								1,030
					350	550	200								1,170
					400	650	250								1,330
GU1EA	16	32	68	16	190	220	30	40	5	18,3	16	16	16 x 20 Z6	32	0,900
					210	250	40								0,980
					240	320	80								1,100
					250	350	100								1,140
					275	390	115								1,240
					300	430	130								1,330
					380	590	210								1,600
					400	630	230								1,730

Type	d [mm]	D [mm]	L2 [mm]	C [mm]	Lmin [mm]	Lmax [mm]	X [mm]	B [mm]	a [mm]	b [mm]	Q [mm]	SW [mm]	Shaft profile	D1 [mm]	Weight [kg]
GU2EA	18	36	74	17	230	280	50	40	6	20,8	18	18	18 x 22 Z6	37	1,350
					250	320	70								1,460
					270	370	100								1,550
					290	400	110								1,660
					300	415	115								1,710
					400	620	220								2,230
					500	820	320								2,750
GU3EA	20	42	82	18	250	300	50	45	6	22,8	20	20	21 x 25 Z6	42	1,990
					270	340	70								2,120
					290	380	90								2,250
					320	440	120								2,460
					380	560	180								2,860
					420	640	220								3,130
					500	800	300								3,660
GU4EA	22	45	95	22	250	280	30	45	6	24,8	22	22	23 x 28 Z6	47	2,350
					270	320	50								2,510
					290	350	60								2,670
					330	430	100								3,000
					350	470	120								3,160
					470	710	240								4,130
GU5EA	25	50	108	26	295	345	50	45	8	28,3	25	25	26 x 32 Z6	52	3,390
					310	375	65								3,520
					350	450	100								3,920
					380	500	120								4,200
					420	590	170								4,590
					460	660	200								4,980
					500	745	245								5,370
GU6EA	30	58	122	29	330	380	50	50	8	33,3	30	30	32 x 38 Z8	58	4,900
					350	420	70								5,170
					370	455	85								5,420
					400	510	110								5,850
					450	620	170								6,480
					500	720	220								7,140
					540	795	255								7,690
GU7EA	35	70	140	35	••	••	••	70	10	38,3	••	••	36 x 42 Z8	70	-
GU8EA	40	80	160	39	••	••	••	80	12	43,3	••	••	42 x 48 Z8	80	-
GU9EA	50	95	190	46	••	••	••	90	14	53,8	••	••	46 x 54 Z8	95	-

Type	d [mm]	D [mm]	L2 [mm]	C [mm]	Lmin [mm]	Lmax [mm]	X [mm]	B [mm]	a [mm]	b [mm]	Q [mm]	SW [mm]	Shaft profile	D1 [mm]
GU03EBA	10	16	52	14	••	••	••	25	3	11,4	8	8	SW 8	16
GU04EBA	12	22	62	18	••	••	••	30	4	13,8	10	10	11 x 14 Z6	22
GU1EBA	16	25	74	21	••	••	••	40	5	18,3	12	12	13 x 16 Z6	26
GU3EBA	20	32	86	24	••	••	••	40	6	22,8	16	16	16 x 20 Z6	32
GU5EBA	25	42	108	31	••	••	••	45	8	28,3	20	20	21 x 25 Z6	42
GU6EBA	30	50	132	38	••	••	••	45	8	33,3	25	25	26 x 32 Z6	52
GU8EBA	40	70	166	47	••	••	••	75	12	43,3	••	••	36 x 42 Z8	70

•• = upon request

Precision joints
Series “ER” (sliding bushes)

- Type “ER”: max. speed 1.000 rpm.
- Max. angle 45°.

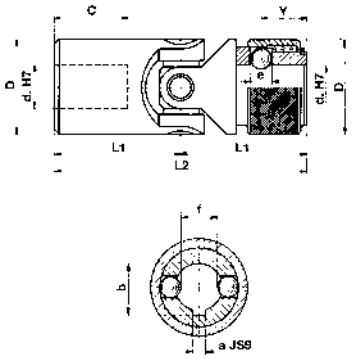

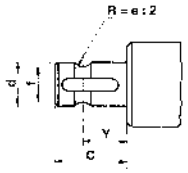

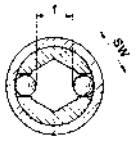

Type	d [mm]	D [mm]	L2 [mm]	L1 [mm]	C [mm]	Y [mm]	e [mm]	f [mm]	a [mm]	b [mm]	SW [mm]
GU02ER	8	16	52	26	14	9,5	3,5	6,3	2	9	8
GU03ER	10	22	62	31	17	11,5	4	8,7	3	11	10
GU04ER	12	25	74	37	21	13,5	4	11	4	13,3	12
GU05ER	14	25	74	37	21	13,5	4	13	5	15,3	14
GU1ER	16	32	86	43	24	14	6,35	14,8	5	17,3	16
GU2ER	18	36	96	48	28	19	8	16	6	19,8	18
GU3ER	20	42	108	54	31	19	8	18	6	22,8	20
GU4ER	22	45	120	60	34	20,5	10	20	6	24,8	22
GU5ER	25	50	132	66	38	20,5	10	23	8	28,3	25
GU6ER	30	58	166	83	49	25	10	28	8	33,3	30

High speed precision joints with needle roller bearings
Series “H” (DIN 808)

- Roller bearings lubricated for life. No maintenance required.
- Precise and versatile, silent and smooth running; wide application field.
- Max. angle: 45° type “H”, 90° type “HD”, max. speed 4.000 rpm.
- Special executions upon request.

H HD

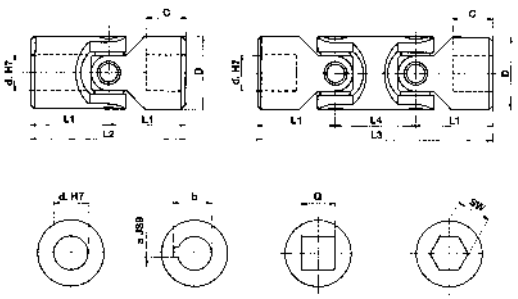

Type	Type	d [mm]	D [mm]	L2 [mm]	L1 [mm]	C [mm]	L4 [mm]	L3 [mm]	a [mm]	b [mm]	Q [mm]	SW [mm]	Weight [kg]		
													H	HD	
GU03H	GU03HD	10	22	48	24	12	26	74	3	11,4	10	10	0,10	0,15	DIN 808
GU04H	GU04HD	12	25	56	28	13	30	86	4	13,8	12	12	0,16	0,25	
GU05H	GU05HD	14	28	60	30	14	36	96	5	16,3	14	14	0,20	0,40	
GU1H	GU1HD	16	32	68	34	16	36	104	5	18,3	16	16	0,30	0,45	
GU2H	GU2HD	18	36	74	37	17	40	114	6	20,8	18	18	0,45	0,70	
GU3H	GU3HD	20	42	82	41	18	46	128	6	22,8	20	20	0,60	1,00	
GU4H	GU4HD	22	45	95	47,5	22	50	145	6	24,8	22	22	0,95	1,55	
GU5H	GU5HD	25	50	108	54	26	55	163	8	28,3	25	25	1,20	2,00	
GU6H	GU6HD	30	58	122	61	29	68	190	8	33,3	30	30	1,85	2,90	
GU6H1	GU6HD1	32	58	130	65	33	68	198	10	35,3	30	30	2,00	3,00	
GU7H	GU7HD	35	70	140	70	35	72	212	10	38,3	••	••	3,15	4,75	
GU8H	GU8HD	40	80	160	80	39	85	245	12	43,3	••	••	4,60	7,20	
GU9H	GU9HD	50	95	190	95	46	100	290	14	53,8	••	••	7,60	12,00	

Type	Type	d [mm]	D [mm]	L2 [mm]	L1 [mm]	C [mm]	L4 [mm]	L3 [mm]	a [mm]	b [mm]	Q [mm]	SW [mm]	Weight [kg]		
													HB	HBD	
GU04HB	GU04HBD	12	22	62	31	18	26	88	4	13,8	10	10	0,12	0,20	DIN 808/7551
GU1HB	GU1HBD	16	25	74	37	21	30	104	5	18,3	12	12	0,20	0,30	
GU3HB	GU3HBD	20	32	86	43	24	38	124	6	22,8	16	16	0,35	0,50	
GU5HB	GU5HBD	25	42	108	54	31	48	156	8	28,3	20	20	0,80	1,20	
GU6HB	GU6HBD	30	50	132	66	38	56	188	8	33,3	25	25	1,20	1,70	
GU8HB	GU8HBD	40	70	166	83	47	72	238	12	43,3	••	••	2,90	4,30	

•• = upon request

Extensible transmissions high speed
Series “H” (DIN 808)

- High speed joints series “H”, type “HA”, with needle roller bearings.
- Min. and max. length upon request:

$$L_{MIN} \geq \frac{L_{MAX} + 2\,L2 + B}{2} \qquad \text{Corsa } X \leq \frac{L_{MAX} - 2\,L2 - B}{2}$$

- Special executions on request.

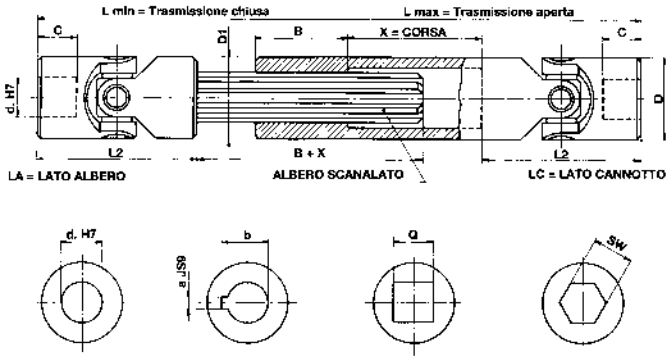

Type	d [mm]	D [mm]	L2 [mm]	C [mm]	Lmin [mm]	Lmax [mm]	X [mm]	B [mm]	a [mm]	b [mm]	Q [mm]	SW [mm]	Shaft profile	D1 [mm]	Weight [kg]
GU03HA	10	22	48	12	140	170	30	30	3	11,4	10	10	11 x 14 Z6	22	0,310
					160	200	40								0,360
					180	240	60								0,380
					230	330	100								0,500
GU04HA	12	25	56	13	160	190	30	40	4	13,8	12	12	13 x 16 Z6	26	0,500
					180	225	45								0,560
					200	270	70								0,620
					220	300	80								0,670
					250	355	105								0,760
					280	420	140								0,840
					300	450	150								0,900
GU05HA	14	28	60	14	170	200	30	40	5	16,3	14	14	13 x 16 Z6	29	0,620
					180	220	40								0,640
					200	260	60								0,720
					220	300	80								0,780
					250	350	100								0,870
					280	420	140								0,960
					300	450	150								1,030
					350	550	200								1,170
					400	650	250								1,330
GU1HA	16	32	68	16	190	220	30	40	5	18,3	16	16	16 x 20 Z6	32	0,900
					210	250	40								0,980
					240	320	80								1,100
					250	350	100								1,140
					275	390	115								1,240
					300	430	130								1,330
					380	590	210								1,600
					400	630	230								1,730

Type	d [mm]	D [mm]	L2 [mm]	C [mm]	Lmin [mm]	Lmax [mm]	X [mm]	B [mm]	a [mm]	b [mm]	Q [mm]	SW [mm]	Shaft profile	D1 [mm]	Weight [kg]
GU2HA	18	36	74	17	230	280	50	40	6	20,8	18	18	18 x 22 Z6	37	1,350
					250	320	70								1,460
					270	370	100								1,550
					290	400	110								1,660
					300	415	115								1,710
					400	620	220								2,230
					500	820	320								2,750
GU3HA	20	42	82	18	250	300	50	45	6	22,8	20	20	21 x 25 Z6	42	1,990
					270	340	70								2,120
					290	380	90								2,250
					320	440	120								2,460
					380	560	180								2,860
					420	640	220								3,130
					500	800	300								3,660
GU4HA	22	45	95	22	250	280	30	45	6	24,8	22	22	23 x 28 Z6	47	2,350
					270	320	50								2,510
					290	350	60								2,670
					330	430	100								3,000
					350	470	120								3,160
					470	710	240								4,130
GU5HA	25	50	108	26	295	345	50	45	8	28,3	25	25	26 x 32 Z6	52	3,390
					310	375	65								3,520
					350	450	100								3,920
					380	500	120								4,200
					420	590	170								4,590
					460	660	200								4,980
					500	745	245								5,370
GU6HA	30	58	122	29	330	380	50	50	8	33,3	30	30	32 x 38 Z8	58	4,900
					350	420	70								5,170
					370	455	85								5,420
					400	510	110								5,850
					450	620	170								6,480
					500	720	220								7,140
					540	795	255								7,690
GU7HA	35	70	140	35	••	••	••	70	10	38,3	••	••	36 x 42 Z8	70	-
GU8HA	40	80	160	40	••	••	••	80	12	43,3	••	••	42 x 48 Z8	80	-
GU9HA	50	95	190	50	••	••	••	90	14	53,8	••	••	46 x 54 Z8	95	-

Type	d [mm]	D [mm]	L2 [mm]	C [mm]	Lmin [mm]	Lmax [mm]	X [mm]	B [mm]	a [mm]	b [mm]	Q [mm]	SW [mm]	Shaft profile	D1 [mm]
GU04HBA	12	22	62	18	••	••	••	30	4	13,8	10	10	11 x 14 Z6	22
GU1HBA	16	25	74	21	••	••	••	40	5	18,3	12	12	13 x 16 Z6	26
GU3HBA	20	32	86	24	••	••	••	40	6	22,8	16	16	16 x 20 Z6	32
GU5HBA	25	42	108	31	••	••	••	45	8	28,3	20	20	21 x 25 Z6	42
GU6HBA	30	50	132	38	••	••	••	45	8	33,3	25	25	26 x 32 Z6	52
GU8HBA	40	70	166	47	••	••	••	70	12	43,3	••	••	36 x 42 Z8	70

•• = upon request

Precision joints
Series “HR” (needle roller bearings)

- Type “ER”: max. speed 4.000 rpm.
- Max. angle 45°.

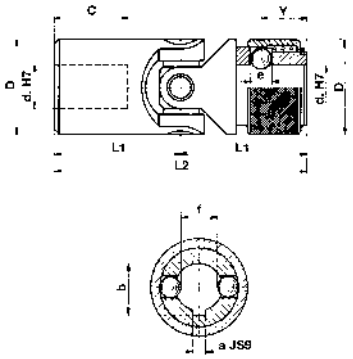

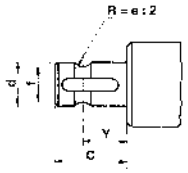

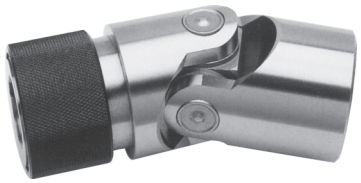

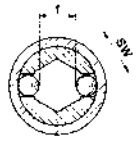

Type	d [mm]	D [mm]	L2 [mm]	L1 [mm]	C [mm]	Y [mm]	e [mm]	f [mm]	a [mm]	b [mm]	SW [mm]
GU03HR	10	22	62	31	17	11,5	4	8,7	3	11	10
GU04HR	12	25	74	37	21	13,5	4	11	4	13,3	12
GU05HR	14	25	74	37	21	13,5	4	13	5	15,3	14
GU1HR	16	32	86	43	24	14	6,35	14,8	5	17,3	16
GU2HR	18	36	96	48	28	19	8	16	6	19,8	18
GU3HR	20	42	108	54	31	19	8	18	6	22,8	20
GU4HR	22	45	120	60	34	20,5	10	20	6	24,8	22
GU5HR	25	50	132	66	38	20,5	10	23	8	28,3	25
GU6HR	30	58	166	83	49	25	10	28	8	33,3	30

Stainless steel joints
Series “X” (DIN 808)

- Max. speed 250 rpm.
- Max. angle: 45° type “X”, 90°type “XD”.
- Max. temperature 200 °C
- Special executions upon request.

X **XD**

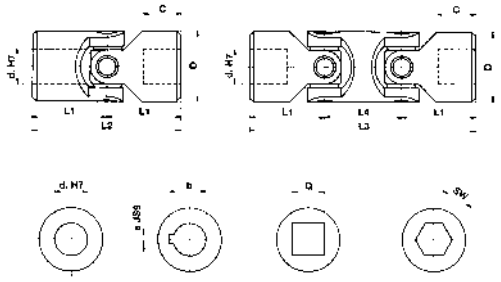

Type	Type	d [mm]	D [mm]	L2 [mm]	L1 [mm]	C [mm]	L4 [mm]	L3 [mm]	a* [mm]	b* [mm]	Q* [mm]	SW* [mm]	Weight [kg]	
													X	XD
GU01X	**GU01XD**	6	16	34	17	8	22	56	2	7	6	6	0,05	0,08
GU02X	**GU02XD**	8	16	40	20	11	22	62	2	9	8	8	0,05	0,08
GU03X	**GU03XD**	10	22	48	24	12	26	74	3	11,4	10	10	0,10	0,15
GU04X	**GU04XD**	12	25	56	28	13	30	86	4	13,8	12	12	0,16	0,25
GU1X	**GU1XD**	16	32	68	34	16	36	104	5	18,3	16	16	0,30	0,45
GU3X	**GU3XD**	20	42	82	41	18	46	128	6	22,8	20	20	0,60	1,00
GU5X	**GU5XD**	25	50	108	54	26	55	163	8	28,3	25	25	1,20	2,00
GU6X	**GU6XD**	30	58	122	61	29	68	190	8	33,3	30	30	1,85	2,90

* = check availability

Special joints with clamping hubs

- Suitable for quick and easy connections
- Suitable for single, double and extensible joints
- With seat for the lock nut (type 2)
- Special executions on request

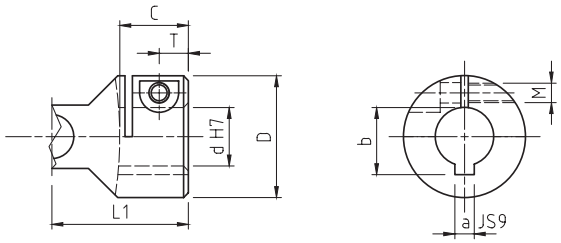

Type 1

Special Code	d [mm]	D [mm]	L1 [mm]	C [mm]	a [mm]	b [mm]	M [mm]	T [mm]	*Ta [Nm]
03CL1	10	22	24	12	3	11,4	M4	5	5
04CL1	12	25	28	13	4	13,8	M4	6	5
05CL1	14	28	30	14	5	16,3	M4	6	5
1CL1	16	32	34	16	5	18,3	M5	7	9
2CL1	18	36	37	17	6	20,8	M5	7	9
3CL1	20	42	41	18	6	22,8	M6	8	16
4CL1	22	45	47,5	22	6	24,8	M6	8	16
5CL1	25	50	54	26	8	28,3	M6	9,5	16
6CL1	30	58	61	29	8	33,3	M8	11	36
7CL1	35	70	70	35	10	38,3	M8	13	36
8CL1	40	80	80	39	12	43,3	M10	14	65
9CL1	50	95	95	46	14	53,8	M12	17,5	100

*Ta = maximum torque screws

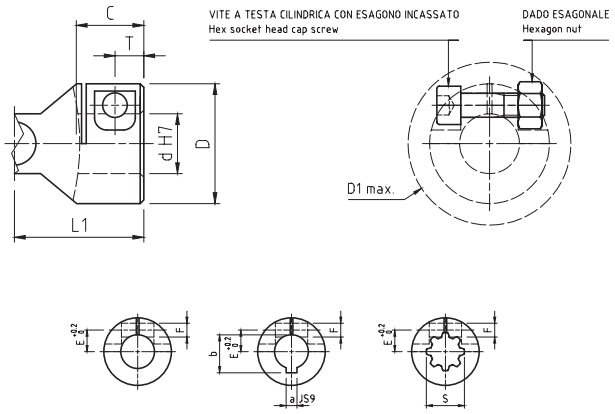

Type 2: clamping hub + lock nut seat

Special Code	d [mm]	D [mm]	L1 [mm]	C [mm]	a [mm]	b [mm]	F [mm]	T [mm]	E [mm]	J [mm]	R [mm]	Y [mm]	*Ta [Nm]	S DIN 5482
1CL2	16	32	43	24	5	18,3	Ø 5,2	7.5	8	13,4	3	4.5	M5= 9	17x14 Z9
2CL2	18	36	37	17	6	20,8	Ø 5,2	7.5	9	15,4	3	4.5	M5= 9	18x15 Z10
3CL2	20	42	41	18	6	22,8	Ø 5,2	8	10	17,5	3	5	M5= 9	20x17 Z12
5CL2	25	50	54	26	8	28,3	Ø 6,2	9.5	12,5	21,9	3,5	6.1	M6= 16	25x22 Z14

*Ta = maximum torque screws

Protection muffs
Series “M”

- Special neoprene rubber.
- Resistant to acids, oils, grease, dust and moisture.
- Filled with grease to ensure constant lubrication.

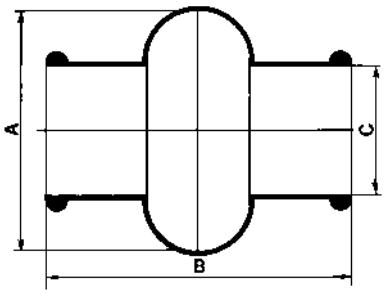

Type	A [mm]	B [mm]	C [mm]	Joint external diameter D [mm]
GMU01M	28	34	15	16
GMU02M	32	40	16,5	18
GMU03M	40	45	20,5	22
GMU04M	48	50	24,5	25/26
GMU05M	52	56	27,5	28/29
GMU1M	56	65	30,5	32
GMU2M	66	72	35,5	36/37
GMU3M	75	82	40	42
GMU4M	84	95	45	45/47
GMU5M	92	108	50	50/52
GMU6M	100	122	56	58

Selecting criteria

Matching one single joint with two shafts (of which the driving one is rotating at a constant speed), it forms an angle which causes a periodic variation of the driven shaft, exactly four fluctuations per revolution.
The difference between the maximum and the minimum speed of the driven shaft depends on the angle formed by the two shafts. The difference grows when increasing of the angle α.
To have a homokinetic transmission, you have to fit either two opposite single joints (paying attention that the two central yokes lie on the same plaine and the angles are equal) or a double joint. The irregularity caused by the former articulation is cancelled by the latter. The overall length resulting from the coupling of the two single joints is even more reduced using a double joint. In other words, the double joint is to be considered the shortest homokinetic transmission.
For low speed applications (max 1.000 rpm) joint with plain bearings (rubbing bearings) are suggested: types E/EB. They are able to support shock loads, drive reserves, irregular runnings and relatively high torques. The working angles must be reduced in operation between 500 and 1.000 rpm.
For high rotation speeds, relatively low torques or wide angles, joints with needle roller bearings (type V - H) are preferred. They can reach 5.000 rpm always relating to the angle.

How to read diagrams

The joint capacity to transmit a regular torque at a constant load with no shocks for a more or less long period, mainly depends on the number of revolutions per minute and the inclination angle α of the two axes.
The following diagrams are based upon the criteria belon.
Each curve corresponds to the joint size (outside diameter D) and represents the torque that the joint can transmit depending upon speed and working angle α.
The diagrams can be directly read if angle α is 10°; for wider angles, torques are reduced, therefore the values are to be corrected using correction factors (F) relating to the angle shown in the table.

Note:
Diagrams' values are merely indicative. Each application has its own particular motion characteristics, such as: shock loads, motion reversals, connected masses, type of starting, presence of elastic joints, stops and starts, etc. We, therefore, suggest calling our technical department.

Diagram for joints
Series “E”

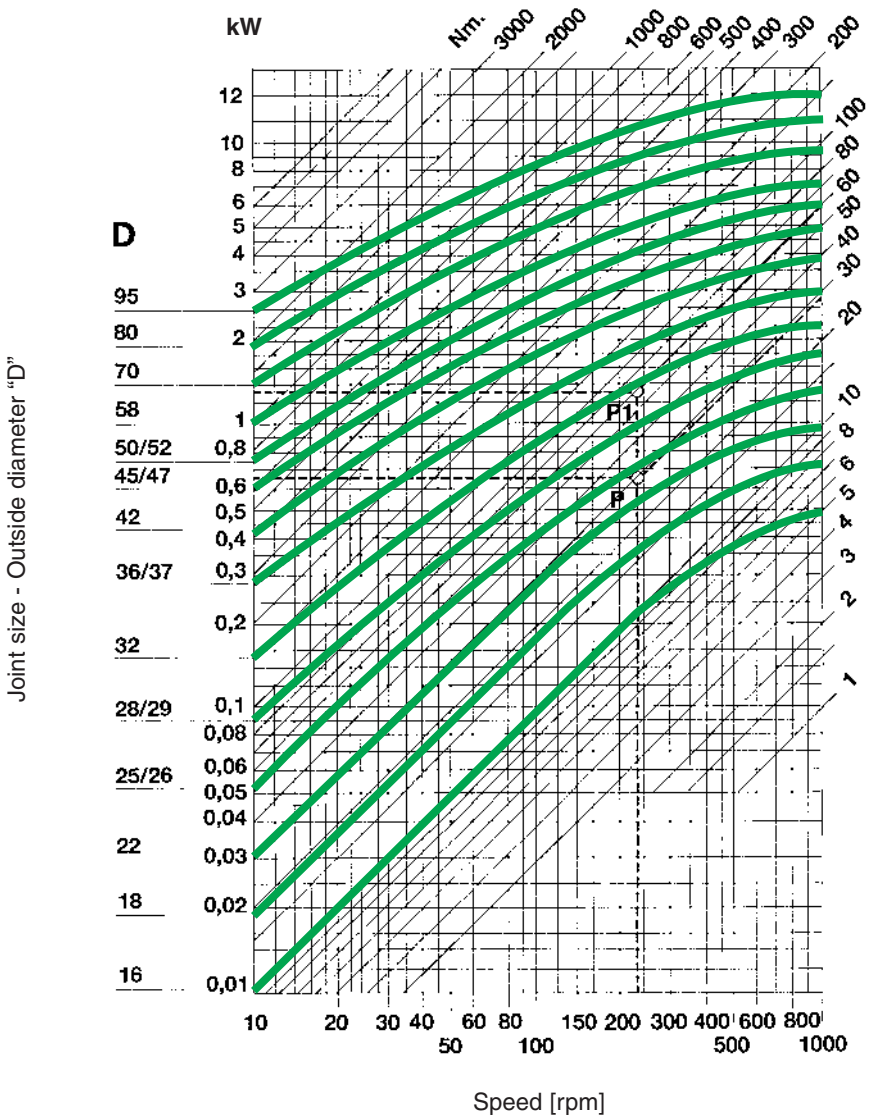

Torque M_T in [Nm]

WORKING ANGLE “α”	5°	10°	15°	20°	25°	30°	35°	40°	45°
CORRECTION FACTOR “F”	1,25	1,00	0,80	0,65	0,55	0,45	0,38	0,30	0,25

Example

- Power: 0,65 kW
- rpm: 230 min^{-1}
- With working angle α = 10°, Factor F = 1,00 (0,65 kW : 1,00 = 0,65 kW) we get point P and Torque M_T = 27 Nm corresponding to joint size D = 25/26 mm (type 04E, 1EB)
- With working angle α = 30°, Factor F = 0,45 (0,65 kW : 0,45 = 1,44 kW) we get point P1 and Torque M_T = 60 Nm corresponding to joint size D = 32 mm (type 1E, 3EB).

Consider that:

$$M_T = 9.550 \times \frac{\text{Power [kW]}}{\text{rpm [min}^{-1}\text{]}} \quad \text{[Nm]}$$

$$M_T = 7.020 \times \frac{\text{Power [CV]}}{\text{rpm [min}^{-1}\text{]}} \quad \text{[Nm]}$$

Diagram for joints
Series “H” - High Speed

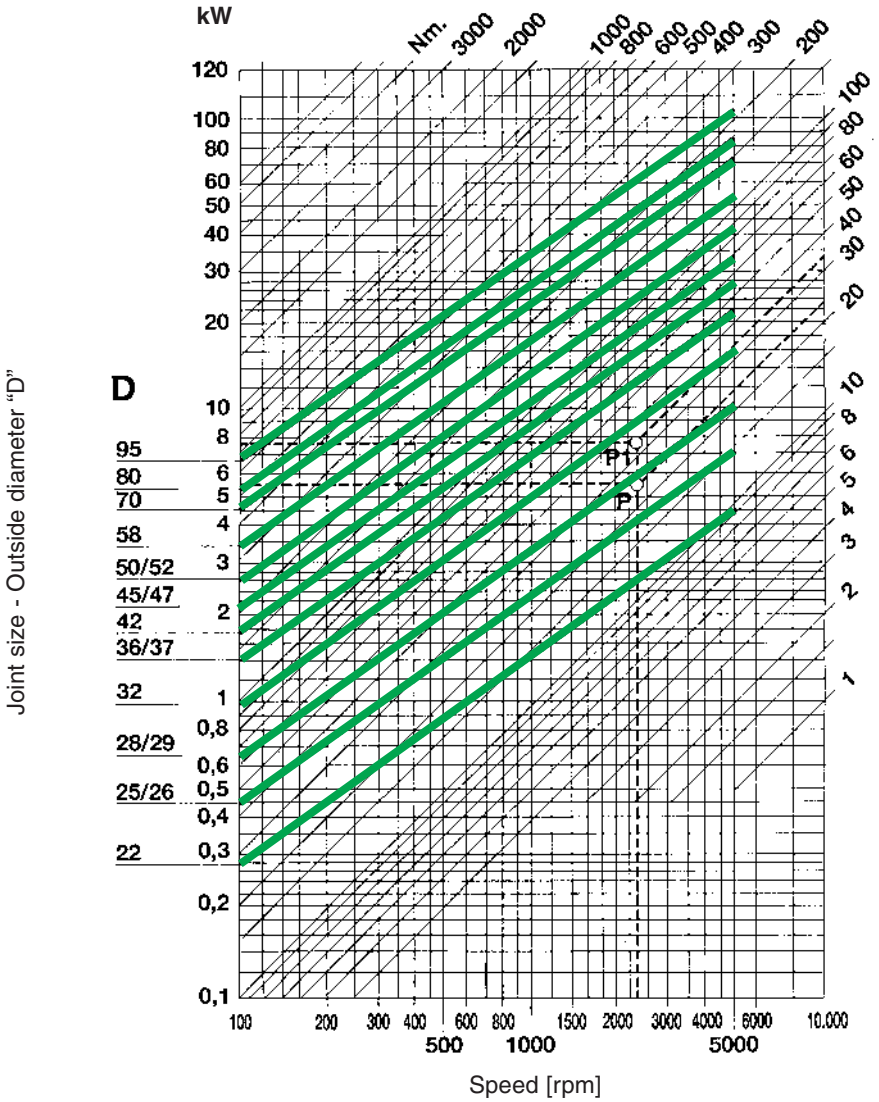

Torque M_T in [Nm]

WORKING ANGLE “α”	5°	10°	15°	20°	25°	30°	35°	40°	45°
CORRECTION FACTOR “F”	1,25	1,00	0,90	0,80	0,70	0,50	0,40	0,30	0,25

Example

- Power: 5,5 kW
- rpm: 2300 min^{-1}
- With working angle α = 10°, Factor F = 1,00 (5,5 kW : 1,00 = 5,5 kW) we get point P and Torque M_T = 23 Nm corresponding to joint size D = 28/29 mm (type 05H, 1HB)
- With working angle α = 25°, Factor F = 0,70 (5,5 kW : 0,70 = 7,85 kW) we get point P1 and Torque M_T = 33 Nm corresponding to joint size D = 32 mm (type 1H, 3HB).

Consider that:

$$M_T = 9.550 \times \frac{\text{Power [kW]}}{\text{rpm [min}^{-1}\text{]}} \quad \text{[Nm]}$$

$$M_T = 7.020 \times \frac{\text{Power [CV]}}{\text{rpm [min}^{-1}\text{]}} \quad \text{[Nm]}$$

Instructions for a correct fitting

Fig. 1

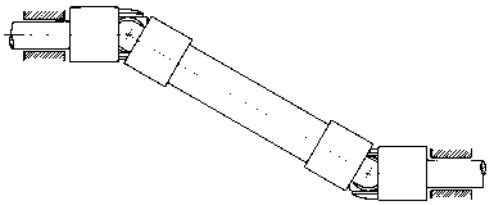

Fig. 2

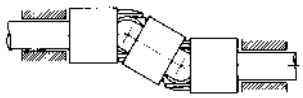

To obtain a uniform rotary motion, always use two opposite single joints or one double joint. The pillow blocks must be positioned as close as possible to the joints (see Picture 1 and 2).

Fig. 3

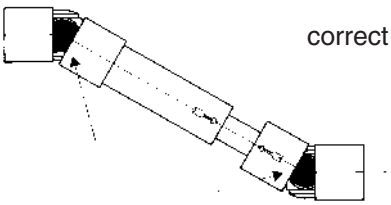

Fig. 4

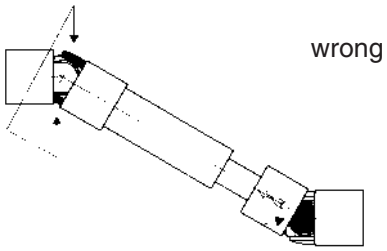

When using two opposite single joints, respect the alignment of the inside yokes. In extensible transmissions also pay attention to the arrows stamped tally (see Picture 3 CORRECT, Picture 4 WRONG).

Fig. 5

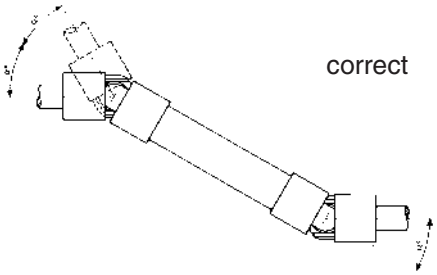

Fig. 6

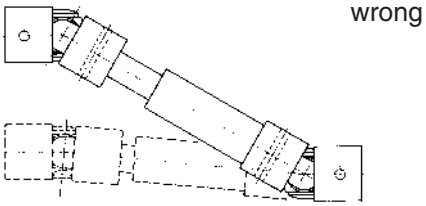

The joints angle α must be equal (see Picture 5). The shafts can be moved one from the other either parallel or symmetrically. Pin holes must not be executed over the yokes to avoid damage (see Picture 6).

Note:

Note:

Note: