Milling arbors with taper shank

MILLING ARBORS WITH STEEP TAPER SHANK
FORFACE MILLING CUTTERS

DIN 6360

Taper shank	d /mm/	D /mm/	Screw	l /mm/	L /mm/	kg	
30	16	26	M 8	29	109	0,38	30×16×29
30	22	34	M 10	19	99	0,40	30×22×19
30	22	34	M 10	37	117	0,56	30×22×37
30	27	40	M 12	23	103	0,50	30×27×23
30	27	40	M 12	47	127	0,62	30×27×47
40	16	26	M 8	29	134	0,87	40×16×29
40	22	34	M 10	19	124	0,87	40×22×19
40	22	34	M 10	37	142	1,04	40×22×37
40	27	40	M 12	23	128	0,90	40×27×23
40	27	40	M 12	47	152	1,10	40×27×47
40	32	46	M 16	31	136	1,11	40×32×31
40	32	46	M 16	60	165	1,13	40×32×60
50	22	34	M 10	19	164	2,90	50×22×19
50	22	34	M 10	37	182	3,20	50×22×37
50	27	40	M 12	23	168	3,60	50×27×23
50	27	40	M 12	47	192	3,30	50×27×47
50	32	46	M 16	31	176	2,14	50×32×31
50	32	46	M 16	60	205	3,12	50×32×60

Used for clamping face plain milling cutters.

Specified clamping screws 24 1426 and feathers 02 2562 are delivered with milling arbor.

MILLING ARBOURS WITH MORSE TAPER SHANK
FOR FACE MILLING CUTTERS

DIN 2087

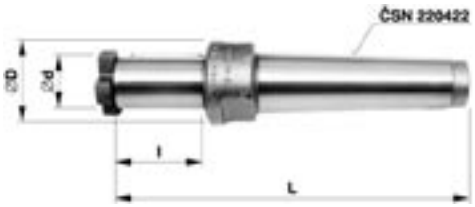

Taper shank	d /mm/	D /mm/	Screw	l /mm/	L /mm/	kg	
2	16	23	M 8	29	112	0,24	2×16×29
3	13	38	M 6	14	119	0,26	3×13×14
3	13	38	M 6	24	129	0,30	3×13×24
3	16	38	M 8	29	134	0,44	3×16×29
3	22	38	M 10	19	124	0,48	3×22×19
3	22	38	M 10	37	142	0,54	3×22×37
3	27	38	M 12	23	128	0,56	3×27×23
3	27	38	M 12	47	152	0,66	3×27×47
4	16	44	M 8	29	161	1,05	4×16×29
4	22	44	M 10	19	151	1,13	4×22×19
4	22	44	M 10	37	169	1,19	4×22×37
4	27	44	M 12	23	155	1,22	4×27×23
4	27	44	M 12	47	179	1,31	4×27×47
4	32	44	M 16	31	163	1,26	4×32×31
4	32	44	M 16	60	192	1,33	4×32×60
5	22	58	M 10	19	183	1,95	5×22×19
5	22	58	M 10	37	201	1,98	5×22×37
5	27	58	M 12	23	187	2,05	5×27×23
5	27	58	M 12	47	211	2,13	5×27×47
5	32	58	M 16	31	195	2,14	5×32×31
5	32	58	M 16	60	224	2,32	5×32×60
6	32	100	M 16	31	259	5,11	6×32×31
6	32	100	M 16	60	288	5,40	6×32×60

Used for clamping face plain milling cutters.

Specified clamping screws 24 1426 and feathers 02 2562 are delivered with milling arbor.

MILLING ARBORS WITH STEEP TAPER SHANK FOR
CLAMPING MILLING HEADS WITH CYLINDRICAL BORING

Taper shank	d /mm/	D /mm/	Screw	l /mm/	L /mm/	kg	
40	32	46	M 16	48	153	1,12	40×32×48
40	40	55	M 20	43	148	1,25	40×40×43
50	32	46	M 16	48	193	3,21	50×32×48
50	40	55	M 20	43	188	3,33	50×40×43
50	50	68	M 24	63	208	3,75	50×50×63
50	60	80	M 30	80	225	3,99	50×60×80
55	40	43	M 20	43	233	5,21	55×40×43
55	50	63	M 24	63	253	5,36	55×50×63
55	60	80	M30	80	270	5,97	55×60×80
60	50	63	M 24	63	288	6,22	60×50×63
60	60	80	M 30	80	305	6,63	60×60×80

Used for clamping milling heads with cylindrical boring.

Specified clamping screws 24 1426 and feathers 02 2562 are delivered with milling arbor.

Milling arbors with taper shank

MILLING ARBORS WITH MORSE TAPER SHANK FOR FACE PLAIN MILLING CUTTERS

Taper shank	d /mm/	D /mm/	Screw	l /mm/	L /mm/	kg	
4	32	44	M 16	48	180	1,45	4×32×48
5	32	58	M 16	48	212	2,27	5×32×48
5	40	58	M 20	43	207	5,25	5×40×43
6	50	100	M 24	63	291	6,45	6×50×63
6	60	100	M 30	80	308	7,13	6×60×80

Used for clamping face plain milling cutters.

Specified clamping screws 24 1426 and feathers 02 2562 are delivered with milling arbor.

MILLING ARBORS WITH STEEP TAPER SHANK WITH FACE DRIVERS

Taper shank	d /mm/	D /mm/	Screw	l /mm/	L /mm/	b /mm/	h /mm/	kg	
40	16	26	M 8	16	123	8	5	0,78	40×16
40	22	34	M 10	18	125	10	5,6	1,10	40×22
40	27	40	M 12	20	127	12	6,3	1,37	40×27
40	32	46	M 16	23	130	14	7	2,14	40×32
50	27	40	M 12	20	165	12	6,3	1,78	50×27
50	32	46	M 16	23	168	14	7	2,15	50×32
50	40	55	M 20	26	171	16	8	2,74	50×40
50	50	68	M 24	30	175	18	9	3,50	50×50

For clamping preset tools.

Specified clamping screws 24 1426 and face drivers delivered with milling arbor.

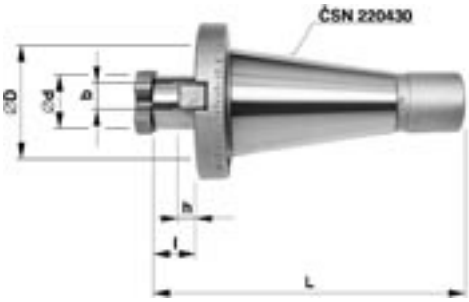

MILLING ARBORS WITH MORSE TAPER SHANKS WITH FACE DRIVERS

Taper shank	d /mm/	D /mm/	Screw	l /mm/	L /mm/	b /mm/	h /mm/	
4	16	-	M 8	16	148	8	5	4×16
4	22	-	M 10	18	150	10	5,6	4×22
4	27	50	M 12	20	165	12	6,3	4×27
4	32	63	M 16	23	170	14	7	4×32
5	27	-	M 14	20	184	12	6,3	5×27
5	32	63	M 16	23	196	14	7	5×32
5	40	80	M 20	26	205	16	8	5×40
5	50	90	M 24	30	214	18	9	5×50

For clamping preset tools.

Specified clamping screws 24 1426 and face drivers delivered with milling arbor.

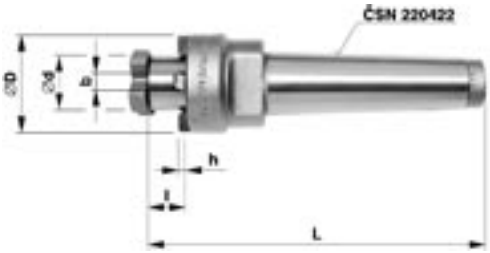

MILLING ARBORS WITH STEEP TAPER SHANKS WITH FACE DRIVERS

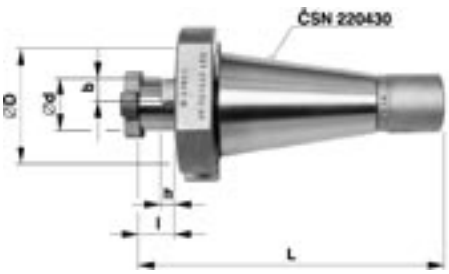

Taper shank	d /mm/	D /mm/	Screw	l /mm/	L /mm/	b /mm/	h /mm/	
30	16	40	M 8	14	98	8	5	30×16
30	22	45	M 10	16	103	10	5,6	30×22
30	27	50	M 12	18	105	12	6,3	30×27
40	16	40	M 8	14	123	8	5	40×16
40	22	45	M 10	16	125	10	5,6	40×22
40	27	56	M 12	18	127	12	6,3	40×27
40	32	60	M 16	20	130	14	7	40×32
50	27	56	M 12	18	167	12	6,3	50×27
50	32	68	M 16	20	169	14	7	50×32
50	40	90	M 16	23	172	16	8	50×40
50	50	95	M 24	27	180	18	9	50×50

For clamping preset tools.

Specified clamping screws 24 1426 and face drivers delivered with milling arbor.

MILLING ARBORS WITH STEEP TAPER SHANK WITH FACE DRIVERS

Taper shank	d /mm/	D /mm/	d_2 /mm/	d_1 /mm/	Screw	l /mm/	L /mm/	b /mm/	h /mm/	
40	40	68	--	M 20	M 20	38	150	15,9	8	40×40
50	40	100	M 12	M 20	M 20	38	195	15,9	8	50×40
50	60	130	M 16	M 16	M 20	38	195	25,4		50×60
60	60	160	M 16	M 16	M 20	38	280	25,4		60×60

For clamping preset tools.

Specified clamping screws 24 1426 and face drivers delivered with milling arbor.

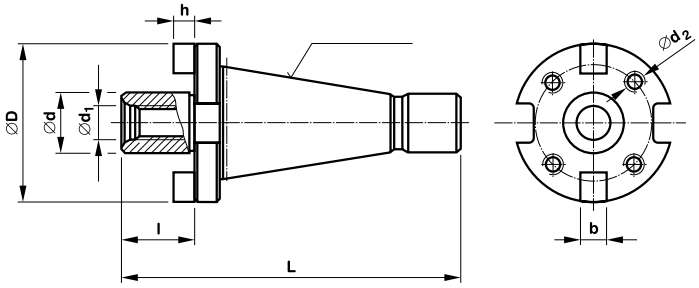

MILLING CENTRING ARBORS WITH STEEP TAPER SHANK

Taper shank	d /mm/	D /mm/	l /mm/	L /mm/	d_1 /mm/	
40	40	44,45	38	130	M 12	40×40
50	60	69,85	45	170	M 12	50×60
60	60	107,95	45	250	M 16	60×60

For clamping preset tools.

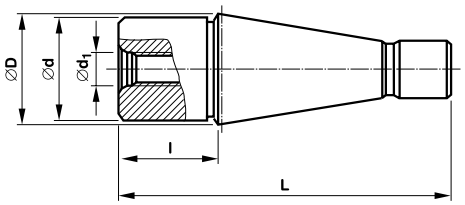

SPANNERS FOR CLAMPING SCREWS OF END MILL ARBORS

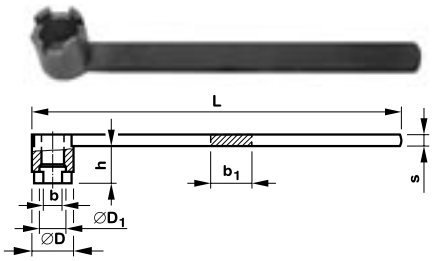

Size	For screw	D /mm/	D_1 /mm/	b /mm/	h /mm/	l /mm/	b_1 /mm/	s /mm/	
13	M 6	18	14	8,1	16	160	12	5	13
16	M 8	20	15	8,1	20	180	12	5	16
22	M 10	28	20	10,1	25	200	15	6	22
27	M 12	34	23	12,1	32	225	20	8	27
32	M 16	40	28	16,1	36	250	25	8	32
40	M 20	54	36	20,1	40	280	30	8	40
50	M 24	66	44	28,1	45	315	30	8	50
60	M 30	80	56	28,1	50	355	35	10	60

Nominal size of wrench correspond to clamping diameter of arbor ∅d.

Milling arbors with taper shank

SCREWS FOR CLAMPING END MILLS ON ARBORS

d /mm/	D /mm/	b /mm/	k /mm/	l /mm/	
M 6	18	8	4	16	M6
M 8	20	8	5	22	M8
M 10	28	10	7	27	M10
M 12	34	12	8	30	M12
M 16	40	16	10	40	M16
M 20	54	20	12	50	M20
M 24	66	28	12	56	M24
M 30	80	28	14	66	M30

Screws are delivered with specified milling arbors or single.

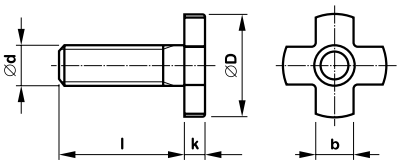

LONG MILLING ARBORS
WITH STEEP TAPER SHANK

Taper shank	d /mm/	l /mm/	L /mm/	Nut 241437	kg	
30	16	200	316	M 14×1,5	1,95	30×16×200
30	16	250	366	M 14×1,5	2,10	30×16×250
30	16	320	436	M 14×1,5	2,35	30×16×320
30	22	200	322	M 20×1,5	2,35	30×22×200
30	22	250	372	M 20×1,5	2,65	30×22×250
30	22	320	442	M 20×1,5	2,70	30×22×320
30	22	400	522	M 20×1,5	2,73	30×22×400
30	27	200	328	M 24×1,5	2,85	30×27×200
30	27	250	378	M 24×1,5	3,05	30×27×250
30	27	320	448	M 24×1,5	3,50	30×27×320
30	27	400	528	M 24×1,5	4,10	30×27×400
40	22	250	402	M 20×1,5	4,40	40×22×250
40	22	320	472	M 20×1,5	4,80	40×22×320
40	22	400	552	M 20×1,5	4,95	40×22×400
40	22	500	652	M 20×1,5	5,10	40×22×500
40	27	250	408	M 24×1,5	5,20	40×27×250
40	27	320	478	M 24×1,5	5,30	40×27×320
40	27	400	558	M 24×1,5	5,45	40×27×400
40	27	500	658	M 24×1,5	5,60	40×27×500
40	32	320	482	M 30×1,5	5,46	40×32×320
40	32	400	562	M 30×1,5	5,55	40×32×400
40	32	500	662	M 30×1,5	5,80	40×32×500
40	32	600	792	M 30×1,5	5,96	40×32×600
40	40	320	490	M 36×2,0	8,89	40×40×320
40	40	400	570	M 36×2,0	9,50	40×40×400
40	40	500	670	M 36×2,0	9,60	40×40×500
40	40	630	800	M 36×2,0	9,87	40×40×630
50	27	320	520	M 24×1,5	6,30	50×27×320
50	27	500	700	M 24×1,5	8,23	50×27×500
50	27	630	830	M 24×1,5	10,15	50×27×630
50	32	400	606	M 30×1,5	9,64	50×32×400
50	32	500	706	M 30×1,5	9,79	50×32×500
50	32	630	836	M 30×1,5	9,93	50×32×630
50	40	400	614	M 36×2,0	10,04	50×40×400
50	40	500	714	M 36×2,0	10,12	50×40×500
50	40	630	844	M 36×2,0	10,23	50×40×630

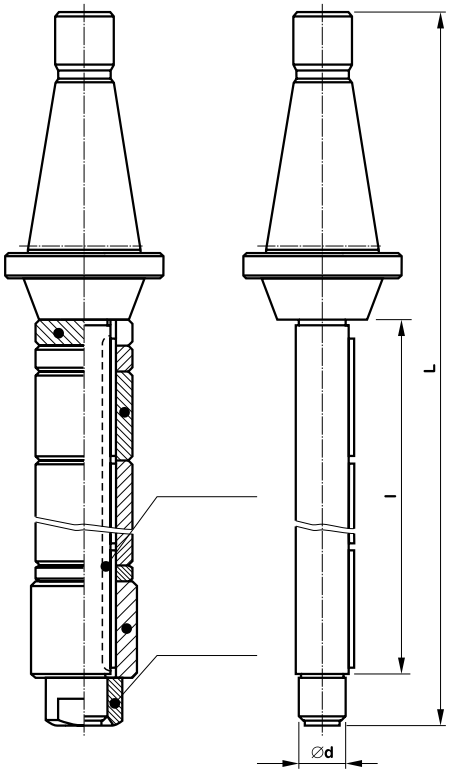

This arbors are used for clamping all sorts of mills and saws. The other end milling arbor is tight fit in a bearing of the telescopic arm.

Set C - Milling arbor with feathers, nut, guide sleeve and set of distance rings.

Milling arbors with taper shank

DISTANCE RINGS
FOR LONG MILLING ARBORS

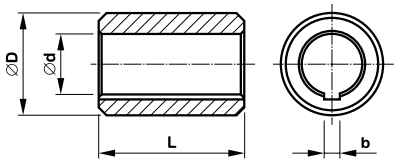

d /mm/	L /mm/	D /mm/	b /mm/	kg	Code
13	0,05	21	3	0,001	13×0,05
13	0,1	21	3	0,001	13×0,1
13	0,2	21	3	0,001	13×0,2
13	0,3	21	3	0,001	13×0,3
13	0,6	21	3	0,001	13×0,6
13	1,0	22	3	0,002	13×1
13	2,0	22	3	0,004	13×2
13	3,0	22	3	0,006	13×3
13	6,0	22	3	0,012	13×6
13	10,0	22	3	0,019	13×10
13	20,0	22	3	0,039	13×20
16	0,05	25	4	0,001	16×0,05
16	0,1	25	4	0,001	16×0,1
16	0,2	25	4	0,001	16×0,2
16	0,3	25	4	0,002	16×0,3
16	0,6	25	4	0,002	16×0,6
16	1,0	26	4	0,003	16×1
16	2,0	26	4	0,005	16×2
16	3,0	26	4	0,007	16×3
16	6,0	26	4	0,014	16×6
16	10,0	26	4	0,025	16×10
16	20,0	26	4	0,048	16×20
16	30,0	26	4	0,073	16×30
22	0,05	33	6	0,002	22×0,05
22	0,1	33	6	0,003	22×0,1
22	0,2	33	6	0,003	22×0,2
22	0,3	33	6	0,004	22×0,3
22	0,6	33	6	0,004	22×0,6
22	1,0	34	6	0,005	22×1
22	2,0	34	6	0,01	22×2
22	3,0	34	6	0,015	22×3
22	6,0	34	6	0,03	22×6
22	10,0	34	6	0,05	22×10
22	20,0	34	6	0,1	22×20
22	30,0	34	6	0,15	22×30
22	60,0	34	6	0,3	22×60
27	0,05	39	7	0,002	27×0,05
27	0,1	39	7	0,002	27×0,1
27	0,2	39	7	0,002	27×0,2

d /mm/	L /mm/	D /mm/	b /mm/	kg	
27	0,3	39	7	0,003	27×0,3
27	0,6	39	7	0,004	27×0,6
27	1,0	40	7	0,005	27×1
27	2,0	40	7	0,01	27×2
27	3,0	40	7	0,015	27×3
27	6,0	40	7	0,03	27×6
27	10,0	40	7	0,05	27×10
27	20,0	40	7	0,1	27×20
27	30,0	40	7	0,15	27×30
27	60,0	40	7	0,3	27×60
27	100,0	40	7	0,506	27×100
32	0,05	45	8	0,002	32×0,05
32	0,1	45	8	0,002	32×0,1
32	0,2	45	8	0,003	32×0,2
32	0,3	45	8	0,009	32×0,3
32	0,6	45	8	0,006	32×0,6
32	1,0	46	8	0,007	32×1
32	2,0	46	8	0,013	32×2
32	3,0	46	8	0,02	32×3
32	6,0	46	8	0,04	32×6
32	10,0	46	8	0,067	32×10
32	20,0	46	8	0,133	32×20
32	30,0	46	8	0,2	32×30
32	60,0	46	8	0,4	32×60
32	100,0	46	8	0,666	32×100
40	0,05	54	10	0,002	40×0,05
40	0,1	54	10	0,002	40×0,1
40	0,2	54	10	0,004	40×0,2
40	0,3	54	10	0,005	40×0,3
40	0,6	54	10	0,006	40×0,6
40	1,0	55	10	0,008	40×1
40	2,0	55	10	0,017	40×2
40	3,0	55	10	0,025	40×3
40	6,0	55	10	0,05	40×6
40	10,0	55	10	0,085	40×10
40	20,0	55	10	0,17	40×20
40	30,0	55	10	0,234	40×30
40	60,0	55	10	0,508	40×60
40	100,0	55	10	0,846	40×100

MILLING ARBORS WITH MORSE TAPER SHANK WITH FACE DRIVING AND A HOLE FOR A WEDGE FOR HORIZONTAL BORING MACHINE

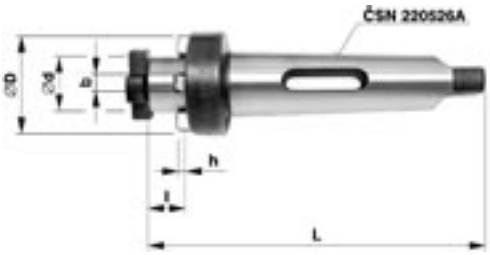

Taper shank	d /mm/	D /mm/	Workmanship	l /mm/	L /mm/	b /mm/	h /mm/	kg	
4	16	40	ČSN 22 0526-A	16	156	8	5	0,960	4×16
4	22	40	CSN 22 0526-A	18	158	10	5,6	1,150	4×22
4	27	50	CSN 22 0526-A	20	160	12	6,3	1,240	4×27
4	32	63	CSN 22 0526-A	23	166	14	7	1,320	4×32
5	22	40	CSN 22 0426-A	18	190	10	5,6	1,950	5×22
5	27	50	CSN 22 0426-A	20	192	12	6,3	2,080	5×27
5	32	63	CSN 22 0426-A	23	198	14	7	2,140	5×32
5	40	80	CSN 22 0426-A	26	206	16	8	2,240	5×40
5	50	90	CSN 22 0426-A	30	213	18	9	2,400	5×50
6	27	63	CSN 22 0426-B	20	257	12	6,3	2,600	6×27
6	32	80	CSN 22 0426-B	23	265	14	7	2,950	6×32
6	40	100	CSN 22 0426-B	26	275	16	8	3,400	6×40
6	50	100	CSN 22 0426-B	30	279	18	9	4,200	6×50

For clamping preset tools.

Specified clamping screws 24 1426 and face drivers delivered with milling arbor.

Adaptors

Dimension-Marking	Hollow Morse	d /mm/	L /mm/	
40×1	1	25	50	40×1
40×2	2	32	50	40×2
40×3	3	40	65	40×3
40×4	4	48	95	40×4
40×5	5	63	170	40×5
50×2	2	32	60	50×2
50×3	3	40	65	50×3
50×4	4	48	70	50×4
50×5	5	63	105	50×5
50×6	6	90	280	50×6

ADAPTORS FOR TOOLS WITH HOLLOW MORSE TAPER

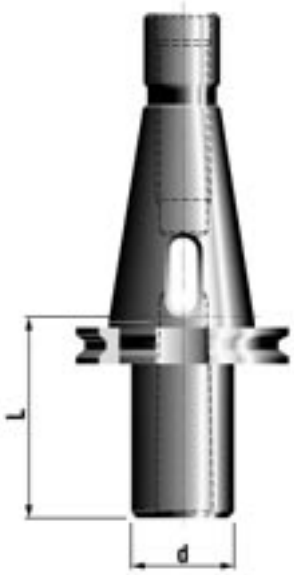

Dimension-Marking	Hollow Morse	d /mm/	L /mm/	
40×1	1	25	50	40×1
40×2	2	32	60	40×2
40×3	3	40	80	40×3
40×4	4	48	110	40×4
50×2	2	32	60	50×2
50×3	3	40	65	50×3
50×4	4	48	80	50×4
50×5	5	63	120	50×5

ADAPTORS FOR TOOLS WITH HOLLOW MORSE TAPER AND THREADED DRAWBAR

END MILL HOLDERS FOR CLAMPING CUTTERS
WITH CYLINDRICAL SHANK AND WELDON FLAT

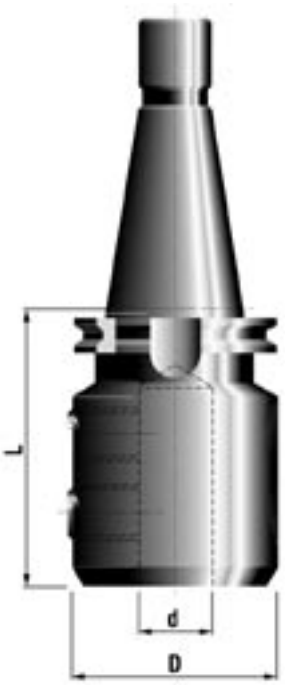

	Dimension-Marking	d H4 /mm/	D /mm/	L /mm/		
591 014 - 18	40×6 - 50	6	25	50	M6	40×6 - 50
591 014 - 19	40×8 - 50	8	28	50	M8	40×8 - 50
591 014 - 20	40×10 - 50	10	35	50	M10	40×10 - 50
591 014 - 21	40×12 - 50	12	42	50	M12	40×12 - 50
591 014 - 22	40×16 - 63	16	48	63	M14	40×16 - 63
591 014 - 23	40×20 - 63	20	52	63	M16	40×20 - 63
591 014 - 24	40×25 - 90	25	65	90	M18×2	40×25 - 90
591 014 - 25	40×32 - 100	32	72	100	M20×2	40×32 - 100
591 014 - 26	50×6 - 63	6	25	63	M6	50×6 - 63
591 014 - 27	50×8 - 63	8	28	63	M8	50×8 - 63
591 014 - 28	50×10 - 63	10	35	63	M10	50×10 - 63
591 014 - 29	50×12 - 63	12	42	63	M12	50×12 - 63
591 014 - 30	50×16 - 63	16	48	63	M14	50×16 - 63
591 014 - 31	50×20 - 63	20	52	63	M16	50×20 - 63
591 014 - 32	50×25 - 80	25	65	80	M18×2	50×25 - 80
591 014 - 33	50×32 - 80	32	72	80	M20×2	50×32 - 80
591 014 - 34	50×40 - 95	40	80	95	M20×2	50×40 - 95

ADAPTORS FOR CLAMPING TOOLS
WITH CYLINDRICAL SHANK AND WELDON FLAT

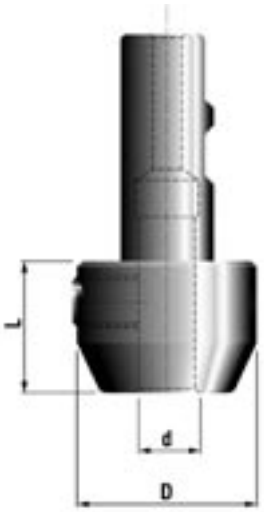

Order No.	Dimension-Marking	d H4 /mm/	D /mm/	L /mm/		
591 017 - 01	20×6	6	25	30	M6	20×6
591 017 - 02	20×8	8	28	30	M8	20×8
591 017 - 03	20×10	10	35	35	M10	20×10
591 017 - 04	20×12	12	42	35	M12	20×12
591 017 - 05	20×16	16	48	60	M14	20×16
591 017 - 11	32×6	6	25	30	M6	32×6
591 017 - 12	32×8	8	28	30	M8	32×8
591 017 - 13	32×10	10	35	35	M10	32×10
591 017 - 14	32×12	12	42	35	M12	32×12
591 017 - 15	32×16	16	48	40	M14	32×16
591 017 - 16	32×20	20	52	40	M16	32×20

MILLING ARBORS FOR CUTTERS WITH LONGITUDINAL KEYWAY

Order No.	Dimension-Marking	d h6 /mm/	d_1 /mm/	l /mm/	l_1 /mm/	T	
591 004 - 01	40×16	16	28	35	30	M8	40×16
591 004 - 02	40×22	22	36	35	40	M10	40×22
591 004 - 03	40×27	27	43	35	60	M12	40×27
591 004 - 04	40×32	32	48	35	60	M16	40×32
591 004 - 05	40×40	40	55	35	60	M20	40×40
591 004 - 06	50×16	16	28	35	30	M8	50×16
591 004 - 07	50×22	22	36	35	40	M10	50×22
591 004 - 08	50×27	27	43	35	60	M12	50×27
591 004 - 09	50×32	32	48	35	60	M16	50×32
591 004 - 10	50×40	40	55	35	60	M20	50×40
591 004 - 11	50×50	50	70	35	60	M24	50×50
591 004 - 12	50×60	60	82	35	60	M30	50×60

COMBINATION SHELL MILL ARBORS FOR CUTTERS WITH KEYWAY OR DRIVING GROOVE

Order No.	Dimension-Marking	d h6 /mm/	d_1 /mm/	l /mm/	l_1 /mm/		T	
591 005 - 01	40×22	22	40	38	30	22	M10	40×22
591 005 - 02	40×27	27	48	38	32	27	M12	40×27
591 005 - 03	40×32	32	58	36	36	32	M16	40×32
591 005 - 04	40×40	40	70	36	40	40	M20	40×40
591 005 - 05	40×50	50	90	34	46	50	M24	40×50
591 005 - 06	50×27	27	48	43	32	27	M12	50×27
591 005 - 07	50×32	32	58	41	36	32	M16	50×32
591 005 - 08	50×40	40	70	41	40	40	M20	50×40
591 005 - 09	50×50	50	90	39	46	50	M24	50×50

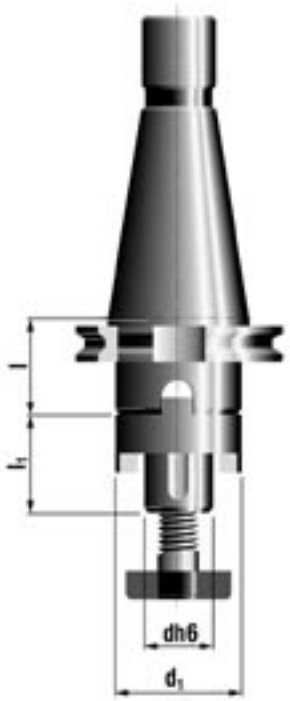

ADAPTORS FOR MILLING CUTTERS

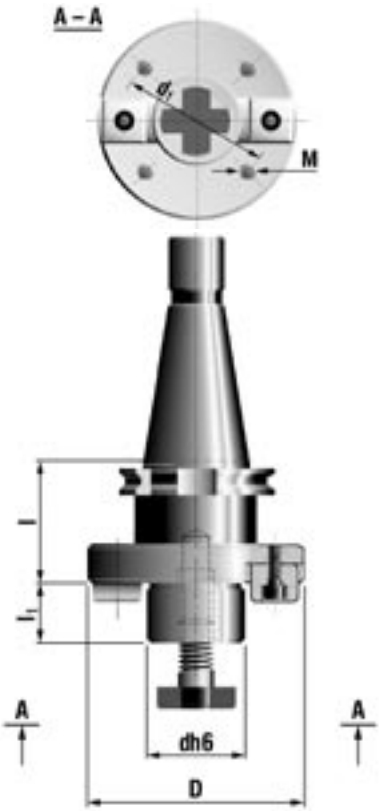

Order No.	Dimension-Marking	d h6 /mm/	D /mm/	l /mm/	l_1 /mm/	d_1 /mm/	M	T	
591 006 - 01	40×40×70	40	70	37	25	-	-	M20	40×40×70
591 006 - 02	40×40×90	40	90	37	25	66,7	M12	-	40×40×90
591 006 - 03	50×40×70	40	70	40	25	-	-	M20	50×40×70
591 006 - 04	50×40×90	40	90	40	25	66,7	M12	-	50×40×90
591 006 - 05	50×60×130	60	130	55	25	101,6	M16	-	50×60×130

ADAPTORS
FOR CLAMPING TOOLS WITH ADJUSTABLE SHANK

Order No.	Dimension-Marking	D /mm/	d H6 /mm/	L /mm/	
591 001 - 01	40×28 - 70	63	28	70	40×28 - 70
591 001 - 02	40×36 - 115	63	36	115	40×36 - 115
591 001 - 03	40×36 - 170	63	36	170	40×36 - 170
591 001 - 04	50×36 - 75	80	36	75	50×36 - 75
591 001 - 05	50×48 - 105	100	48	105	50×48 - 105
591 001 - 06	50×48 - 200	100	48	200	50×48 - 200

List of the tools with adjustable shank

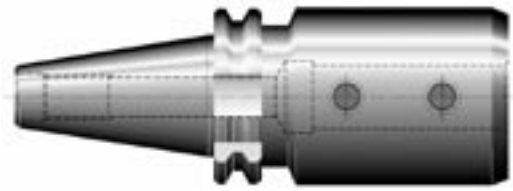

PN 24 7381

ADJUSTABLE NUT
for adjustable cylindrical shanks

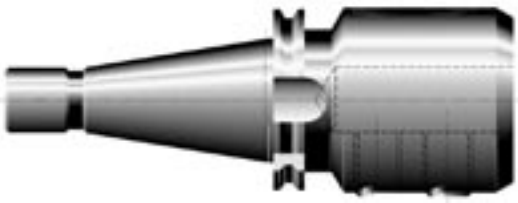

ADJUSTABLE SHORT CLAMPING BUSHES
with straight shank and inner Morse taper

ADJUSTABLE CLAMPING BUSHES
with straight shank and inner Morse taper

BORING BARS
with straight adjustable shank

MILLING ARBORS
with adjustable shank for shell type cutter

HOLDERS
with adjustable shank for circular saws

HOLDERS
with adjustable shank for flat drills

Adjustable clamping bushes

ADJUSTABLE NUT
FOR ADJUSTABLE CYLINDRICAL SHANKS

Order No.	Dimension-Marking	Thread	D /mm/	L /mm/	
591 025 - 01	28×12	Tr 28×2	39,6	12	28×12
591 025 - 02	36×14	Tr 36×2	49,6	14	36×14
591 025 - 03	48×18	Tr 48×2	66,6	18	48×18

ADJUSTABLE CLAMPING BUSHES
WITH STRAIGHT SHANK AND INNER MORSE TAPER

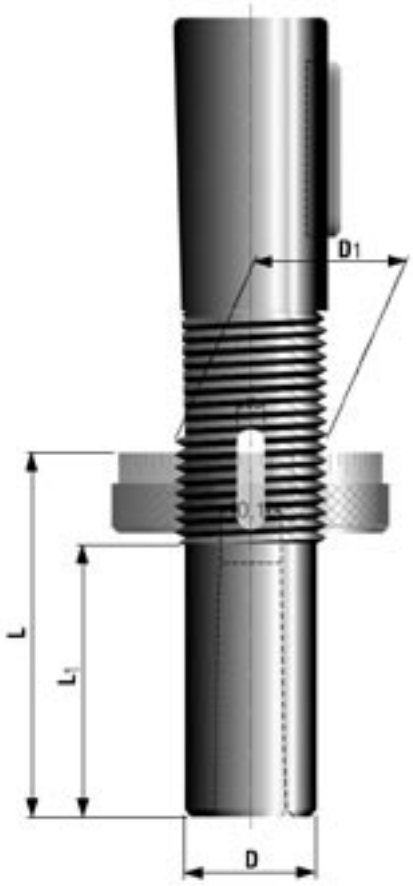

Order No.	Dimension-Marking	D_1 /mm/	MORSE	D /mm/	L_1 /mm/	L /mm/	
591 010 - 01	28×1×25	∅28 (Tr 28×2)	1	25	25	37 - 65	28×1×25
591 010 - 02	28×1×50	∅28 (Tr 28×2)	1	25	50	62 - 90	28×1×50
591 010 - 03	28×1×75	∅28 (Tr 28×2)	1	25	75	87 - 115	28×1×75
591 010 - 04	28×1×100	∅28 (Tr 28×2)	1	25	100	112 - 140	28×1×100
591 010 - 05	28×2×25	∅28 (Tr 28×2)	2	25	25	37 - 65	28×2×25
591 010 - 06	28×2×50	∅28 (Tr 28×2)	2	25	50	62 - 87	28×2×50
591 010 - 07	28×2×75	∅28 (Tr 28×2)	2	25	75	87 - 112	28×2×75
591 010 - 08	28×2×100	∅28 (Tr 28×2)	2	25	100	112 - 137	28×2×100
591 010 - 09	36×1×30	∅36 (Tr 36×2)	1	33	30	44 - 80	36×1×30
591 010 - 10	36×1×60	∅36 (Tr 36×2)	1	33	60	74 - 110	36×1×60
591 010 - 11	36×1×90	∅36 (Tr 36×2)	1	33	90	104 - 140	36×1×90
591 010 - 12	36×1×120	∅36 (Tr 36×2)	1	33	120	134 - 170	36×1×120
591 010 - 13	36×2×30	∅36 (Tr 36×2)	2	33	30	44 - 79	32×2×30
591 010 - 14	36×2×60	∅36 (Tr 36×2)	2	33	60	74 - 109	36×2×60
591 010 - 15	36×2×90	∅36 (Tr 36×2)	2	33	90	104 - 139	36×2×90
591 010 - 16	36×2×120	∅36 (Tr 36×2)	2	33	120	134 - 169	36×2×120
591 010 - 17	36×3×30	∅36 (Tr 36×2)	3	33	30	44 - 79	36×3×30
591 010 - 18	36×3×60	∅36 (Tr 36×2	3	33	60	74 - 109	36×3×60
591 010 - 19	36×3×90	∅36 (Tr 36×2)	3	33	90	104 - 139	36×3×90
591 010 - 20	36×3×120	∅36 (Tr 36×2)	3	33	120	134 - 169	36×3×120
591 010 - 21	36×4×120	∅36 (Tr 36×2)	4	45	120	134 - 169	36×4×120
591 010 - 22	48×1×40	∅48 (Tr 48×2)	1	45	40	58 - 105	48×1×40
591 010 - 23	48×1×80	∅48 (Tr 48×2)	1	45	80	98 - 145	48×1×80
591 010 - 24	48×1×120	∅48 (Tr 48×2)	1	45	120	138 - 185	48×1×120
591 010 - 25	48×1×160	∅48 (Tr 48×2)	1	45	160	178 - 225	48×1×160
591 010 - 26	48×2×40	∅48 (Tr 48×2)	2	45	40	58 - 103	48×2×40
591 010 - 27	48×2×80	∅48 (Tr 48×2)	2	45	80	98 - 143	48×2×80
591 010 - 28	48×2×120	∅48 (Tr 48×2)	2	45	120	138 - 183	48×2×120
591 010 - 29	48×2×160	∅48 (Tr 48×2)	2	45	160	178 - 223	48×2×160
591 010 - 30	48×3×40	∅48 (Tr 48×2)	3	45	40	58 - 103	48×3×40
591 010 - 31	48×3×80	∅48 (Tr 48×2)	3	45	80	98 - 143	48×3×80
591 010 - 32	48×3×120	∅48 (Tr 48×2)	3	45	120	138 - 183	48×3×120
591 010 - 33	48×3×160	∅48 (Tr 48×2)	3	45	160	178 - 223	48×3×160
591 010 - 34	48×4×40	∅48 (Tr 48×2)	4	45	40	58 - 103	48×4×40
591 010 - 35	48×4×80	∅48 (Tr 48×2)	4	45	80	98 - 143	48×4×80
591 010 - 36	48×4×120	∅48 (Tr 48×2)	4	45	120	138 - 183	48×4×120
591 010 - 37	48×4×160	∅48 (Tr 48×2)	4	45	160	178 - 223	48×4×160
591 010 - 38	48×5×160	∅48 (Tr 48×2)	5	60	160	178 - 223	48×5×160

Adjusrtable clamping bushes

Order No.	Dimension-Marking	D_1 /mm/	MORSE	L /mm/	
591 010 - 39	28×1	∅28 (Tr 28×2)	1	13 - 38	28×1
591 010 - 40	28×2	∅28 (Tr 28×2)	2	13 - 38	28×2
591 010 - 41	36×1	∅36 (Tr 36×2)	1	15 - 50	36×1
591 010 - 42	36×2	∅36 (Tr 36×2)	2	15 - 50	36×2
591 010 - 43	36×3	∅36 (Tr 36×2)	3	15 - 50	36×3
591 010 - 44	48×1	∅48 (Tr 48×2)	1	19 - 64	48×1
591 010 - 45	48×2	∅48 (Tr 48×2)	2	19 - 64	48×2
591 010 - 46	48×3	∅48 (Tr 48×2)	3	19 - 64	48×3
591 010 - 47	48×4	∅48 (Tr 48×2)	4	19 - 64	48×4

ADJUSTABLE SHORT CLAMPING BUSHES

WITH STRAIGHT SHANK AND INNER MORSE TAPER

Order No.	Dimension-Marking	D_1 /mm/	D /mm/	L_1 /mm/	L /mm/	d /mm/	Cutter unit	
470 012 - 01	28×19×88	∅28(Tr 28×2)	19	88	100-125	20-32	6×17,6×21	28×19×88
470 014 - 01	28×25×88	∅28(Tr 28×2)	25	88	100-125	31-44	8×28	28×25×88
470 016 - 04	28×32×118	∅28(Tr 28×2)	32	118	130-160	73-58	10×38	28×32×118
470 017 - 04	28×40×118	∅28(Tr 28×2)	40	118	130-160	56-72	16×49	28×40×118
470 012 - 02	36×19×86	∅36(Tr 36×2)	19	86	100-135	20-32	6×17,6×21	36×19×86
470 014 - 02	36×25×86	∅36(Tr 36×2)	25	86	100-135	31-44	8×28	36×25×86
470 016 - 05	36×32×116	∅36(Tr 36×2)	32	116	130-160	43-58	10×38	36×32×116
470 016 - 06	36×32×146	∅36(Tr 36×2)	32	146	160-195	43-58	10×38	36×32×146
470 017 - 05	36×40×116	∅36(Tr 36×2)	40	116	130-160	56-72	16×49	36×40×116
470 017 - 06	36×40×146	∅36(Tr 36×2)	40	146	160-200	56-72	16×49	36×40×146
470 018 - 04	36×50×116	∅36(Tr 36×2)	50	116	130-170	66-90	16×60	36×50×116
470 018 - 05	36×50×146	∅36(Tr 36×2)	50	146	160-200	66-90	16×60	36×50×146
470 019 - 04	36×63×116	∅36(Tr 36×2)	63	116	130-175	88-120	24×78	36×63×116
470 019 - 05	36×63×146	∅36(Tr 36×2)	63	146	160-205	88-120	24×78	36×63×146
470 012 - 03	48×19×82	∅48(Tr 48×2)	19	82	100-135	20-32	6×17,6×21	48×19×82
470 014 - 03	48×25×82	∅48(Tr 48×2)	25	82	100-135	31-44	8×28	48×25×82
470 016 - 07	48×32×112	∅48(Tr 48×2)	32	112	130-175	43-58	10×38	48×32×112
470 016 - 08	48×32×142	∅48(Tr 48×2)	32	142	106-205	43-58	10×38	48×32×142
470 017 - 07	48×40×112	∅48(Tr 48×2)	40	112	130-175	56-72	16×49	48×40×112
470 017 - 08	48×40×142	∅48(Tr 48×2)	40	142	160-205	56-72	16×49	48×40×142
470 018 - 06	48×50×142	∅48(Tr 48×2)	50	142	160-210	66-90	16×60	48×50×142
470 018 - 07	48×50×182	∅48(Tr 48×2)	50	182	200-250	66-90	16× 60	48×50×182
470 019 - 06	48×63×142	∅48(Tr 48×2)	63	142	160-215	88-120	24×78	48×63×142
470 019 - 07	48×63×182	∅48(Tr 48×2)	63	182	200-255	88-120	24×78	48×63×182
470 020 - 02	48×80×142	∅48(Tr 48×2)	80	142	160-220	110-160	24×104	48×80×142
470 020 - 03	48×80×182	∅48(Tr 48×2)	80	182	200-260	110-160	24×104	48×80×182

Boring bars ∅19, ∅25 are delivered with fitted cutter units PN 24 2428, ∅32, ∅40, ∅50, ∅63, ∅80 are delivered with fitted cutter units PN 24 2421.

BORING BARS

WITH ADJUSTABLE SHANK

MILLING ARBORS WITH ADJUSTABLE SHANK
FOR SHELL TYPE CUTTER

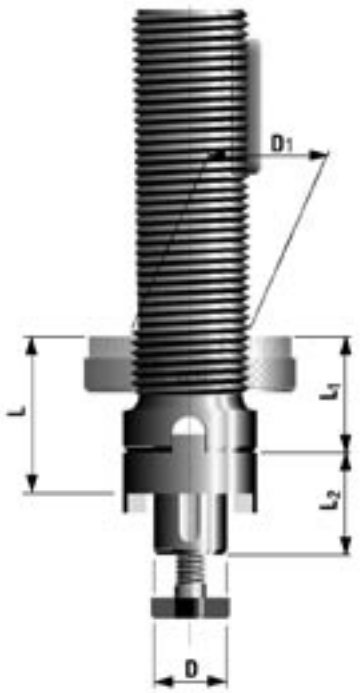

Order No.	Dimension-Marking	D_1 /mm/	D /mm/	L_2 /mm/	L /mm/	L_1 /mm/	
591 007 - 01	36×16	∅36 (Tr 36×2)	16	26	40÷75	30÷65	36×16
591 007 - 02	36×22	∅36 (Tr 36×2)	22	30	45÷80	33÷68	36×22
591 007 - 03	36×27	∅36 (Tr 36×2)	27	32	45÷80	33÷68	36×27
591 007 - 04	36×32	∅36 (Tr 36×2)	32	36	50÷85	36÷71	36×32
591 007 - 05	48×16	∅48 (Tr 48×2)	16	26	45÷90	35÷80	48×16
591 007 - 06	48×22	∅48 (Tr 48×2)	22	30	50÷95	38÷83	48×22
591 007 - 07	48×27	∅48 (Tr 48×2)	27	32	50÷95	38÷83	48×27
591 007 - 08	48×32	∅48 (Tr 48×2)	32	36	55÷100	41÷86	48×32
591 007 - 09	48×40	∅48 (Tr 48×2)	40	40	55÷100	41÷86	48×40

HOLDERS WITH ADJUSTABLE SHANK
FOR CIRCULAR SAWS

Order No.	Dimension-Marking	D_1 /mm/	d /mm/	D /mm/	L /mm/	
591 022 - 01	28×10	∅28 (Tr 28×2)	10	25	70 - 100	28×10
591 022 - 02	28×16	∅28 (Tr 28×2)	16	40	70 - 100	28×16
591 022 - 03	36×10	∅28 (Tr 28×2)	10	25	75 - 110	36×10
591 022 - 04	38×16	∅36 (Tr 36×2)	16	40	70 - 105	38×16
591 022 - 05	48×10	∅48 (Tr 48×2)	10	25	100 - 145	48×10
591 022 - 06	48×16	∅48 (Tr 48×2)	16	40	95 - 140	48×16
591 022 - 07	48×27	∅48 (Tr 48×2)	27	60	95 - 140	48×27

Holders

Order No.	Dimension-Marking	D_1 /mm/	a /mm/	L /mm/	Exchangeable tips	
591 008 - 01	36×20×125	∅36 (Tr 36×2)	20	125-150	26, 28, 30	36×20×125
591 008 - 02	36×25×130	∅36 (Tr 36×2)	25	130-165	32, 34, 35, 36, 38	36×25×130
591 008 - 03	36×32 ×135	∅36 (Tr 36×2)	32	135-170	40 ,42, 44, 45, 46, 48	36×32×135
591 008 - 04	48×20×125	∅48 (Tr 48×2)	20	125-170	26, 28, 30	48×20×125
591 008 - 05	48×20×220	∅48 (Tr 48×2)	20	220-270	26, 28, 30	48×20×220
591 008 - 06	48×25×130	∅48 (Tr 48×2)	25	130-175	32, 34, 35, 36, 38	48×25×130
591 008 - 07	48×25×230	∅48 (Tr 48×2)	25	230-275	32, 34, 35, 36, 38	48×25×230
591 008 - 08	48×32×135	∅48 (Tr 48×2)	32	135-180	40, 42, 44, 45, 46, 48	48×32×135
591 008 - 09	48×32×235	∅48 (Tr 48×2)	32	235-280	40, 42, 44, 45, 46, 48	48×32×235
591 008 - 10	48×40×145	∅48 (Tr 48×2)	40	145-190	50, 52, 55, 56, 58, 60, 62	48×40×145
591 008 - 11	48×40×245	∅48 (Tr 48×2)	40	245-290	50, 52, 55, 56, 58, 60, 62	48×40×245
591 008 - 12	48×50×155	∅48 (Tr 48×2)	50	155-200	63, 65, 68, 70, 72, 75, 78	48×50×155
591 008 - 13	48×50×255	∅48 (Tr 48×2)	50	255-300	63, 65, 68, 70, 72, 75, 78	48×50×255

HOLDERS WITH ADJUSTABLE SHANK FOR FLAT DRILLS

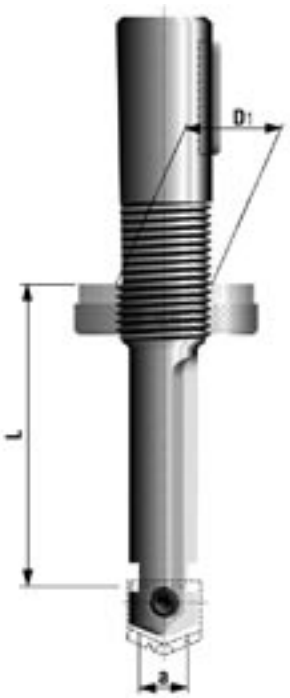

Order No.	d /mm/	a /mm/	L /mm/	
486 001 - 26	26	20	25	26
486 001 - 28	28	20	25	28
486 001 - 30	30	20	25	30
486 001 - 32	32	25	27,5	32
486 001 - 34	34	25	27,5	34
486 001 - 35	35	25	27,5	35
486 001 - 36	36	25	27,5	36
486 001 - 38	38	25	27,5	38
486 001 - 40	40	32	33	40
486 001 - 42	42	32	33	42
486 001 - 44	44	32	33	44
486 001 - 45	45	32	33	45
486 001 - 46	46	32	33	46
486 001 - 48	48	32	33	48
486 001 - 50	50	40	40	50
486 001 - 52	52	40	40	52
486 001 - 55	55	40	40	55
486 001 - 56	56	40	40	56

Order No.	d /mm/	a /mm/	L /mm/	
486 001 - 58	58	40	40	58
486 001 - 60	60	40	40	60
486 001 - 62	62	40	40	62
486 001 - 63	63	50	48	63
486 001 - 65	65	50	48	65
486 001 - 68	68	50	48	68
486 001 - 70	70	50	48	70
486 001 - 72	72	50	48	72
486 001 - 75	75	50	48	75
486 001 - 78	78	50	48	78
486 001 - 80	80	63	58	80
486 001 - 82	82	63	58	82
486 001 - 85	85	63	58	85
486 001 - 88	88	63	58	88
486 001 - 90	90	63	58	90
486 001 - 92	92	63	58	92
486 001 - 95	95	63	58	95
486 001 - 98	98	63	58	98

EXCHANGEABLE TIPS FOR FLAT DRILLS

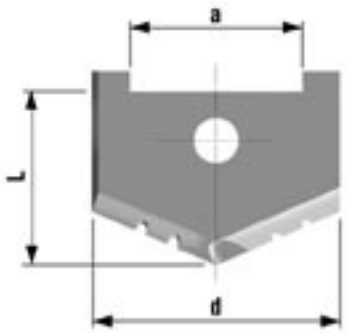

TWO CUTTING EDGE BORING CUTTERS
WITH EXCHANGEABLE TIPS

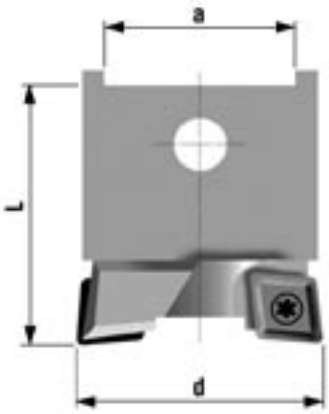

Order No.	d /mm/	a /mm/	L /mm/	VDSK Exchangeable tips	
486 003 - 26	26	20	31	CCMT 09T308	26
486 003 - 28	28	20	31	CCMT 09T308	28
486 003 - 30	30	20	31	CCMT 09T308	30
486 003 - 32	32	25	33,5	CCMT 09T308	32
486 003 - 34	34	25	33,5	CCMT 09T308	34
486 003 - 35	35	25	33,5	CCMT 09T308	35
486 003 - 36	36	25	33,5	CCMT 09T308	36
486 003 - 38	38	25	33,5	CCMT 09T308	38
486 003 - 40	40	32	42	CCMT 120408	40
486 003 - 42	42	32	42	CCMT 120408	42
486 003 - 44	44	32	42	CCMT 120408	44
486 003 - 45	45	32	42	CCMT 120408	45
486 003 - 46	46	32	42	CCMT 120408	46
486 003 - 48	48	32	42	CCMT 120408	48
486 003 - 50	50	40	47	CCMT 120408	50
486 003 - 52	52	40	47	CCMT 120408	52
486 003 - 55	55	40	47	CCMT 120408	55
486 003 - 56	56	40	47	CCMT 120408	56
486 003 - 58	58	40	47	CCMT 120408	58
486 003 - 60	60	40	47	CCMT 120408	60
486 003 - 62	62	40	47	CCMT 120408	62
486 003 - 63	63	50	54	CCMT 120408	63
486 003 - 65	65	50	54	CCMT 120408	65
486 003 - 68	68	50	54	CCMT 120408	68
486 003 - 70	70	50	54	CCMT 120408	70
486 003 - 72	72	50	54	CCMT 120408	72
486 003 - 75	75	50	54	CCMT 120408	75
486 003 - 78	78	50	54	CCMT 120408	78
486 003 - 80	80	63	63	CCMT 120408	80
486 003 - 82	82	63	63	CCMT 120408	82
486 003 - 85	85	63	63	CCMT 120408	85
486 003 - 88	88	63	63	CCMT 120408	88
486 003 - 90	90	63	63	CCMT 120408	90
486 003 - 92	92	63	63	CCMT 120408	92
486 003 - 95	95	63	63	CCMT 120408	95
486 003 - 98	98	63	63	CCMT 120408	98

BORING BARS FOR FINISHING

Order No.	Dimension-Marking	D /mm/	L /mm/	d_{min}-d_{max} /mm/	Cutter unit	
470 012 - 04	40×19 – 90	19	90	20 - 32	6 - 17, 6 - 21	40×19 - 90
470 014 - 04	40×25 – 125	25	125	31 - 44	8 - 28	40×25 - 125
470 016 - 09	40×32 – 125	32	125	43 - 58	10 - 38	40×32 - 125
470 016 - 10	40×32 – 160	32	160	43 - 58	10 - 38	40×32 - 160
470 017 - 09	40×40 – 160	40	160	56 - 72	16 - 49	40×40 - 160
470 017 - 10	40×40 – 200	40	200	56 - 72	16 - 49	40×40 - 200
470 018 - 08	40×50 – 160	50	160	66 - 90	16 - 60	40×50 - 160
470 018 - 09	40×50 – 200	50	200	66 - 90	16 - 60	40×50 - 220
470 018 - 10	40×50 – 250	50	250	66 - 90	16 - 60	40×50 - 250
470 019 - 08	40×63 – 160	63	160	88 - 120	24 - 78	40×63 - 160
470 019 - 09	40×63 – 200	63	200	88 - 120	24 - 78	40×63 - 200
470 019 - 10	40×63 – 250	63	250	88 - 120	24 - 78	40×63 - 250
470 012 - 05	50×19 – 90	19	90	20 - 32	6 - 7, 6 - 21	50×19 - 90
470 014 - 05	50×25 – 125	25	125	31 - 44	8 - 28	50×25 - 125
470 016 - 11	50×32 – 125	32	125	43 - 58	10 - 38	50×32 - 125
470 016 - 12	50×32 – 160	32	160	43 - 58	10 - 38	50×32 - 160
470 017 - 11	50×40 – 160	40	160	56 - 72	16 - 49	50×40 - 160
470 017 - 12	50×40 – 200	40	200	56 - 72	16 - 49	50×40 - 200
470 018 - 11	50×50 – 160	50	160	66 - 90	16 - 60	50×50 - 160
470 018 - 12	50×50 – 220	50	220	66 - 90	16 - 60	50×50 - 220
470 018 - 13	50×50 – 315	50	315	66 - 90	16 - 60	50×50 - 315
470 019 - 11	50×63 – 160	63	160	88 - 120	24 - 78	50×63 - 160
470 019 - 12	50×63 – 220	63	220	88 - 120	24 - 78	50×63 - 220
470 019 - 13	50×63 – 315	63	315	88 - 120	24 - 78	50×63 - 315
470 020 - 04	50×80 – 160	80	160	110 - 160	24 - 104	50×80 - 160
470 020 - 05	50×80 – 220	80	220	110 - 160	24 - 104	50×80 - 220
470 020 - 06	50×80 – 315	80	315	110 - 160	24 - 104	50×80 - 315

Boring bars ∅19, ∅25 are delivered with fitted cutter units PN 24 2428, ∅32, ∅40, ∅50, ∅63, ∅80 are delivered with fitted cutter units PN 24 2421.

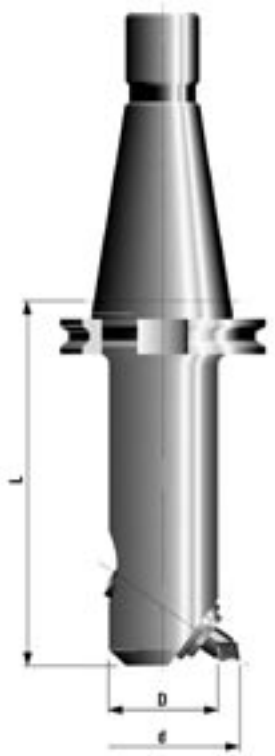

BORING BARS FOR ROUGHING

Order No.	Dimension-Marking	D /mm/	L /mm/	d_{min}-d_{max} /mm/	Cutter unit	
470 071 - 03	40×25 – 140	25	140	30 - 39	25	40×25 - 140
470 072 - 03	40×32 – 140	32	140	38 - 50	32	40×32 - 140
470 072 - 04	40×32 – 180	32	180	38 - 50	32	40×32 - 180
470 073 - 03	40×40 – 180	40	180	48 - 63	40	40×40 - 180
470 073 - 04	40×40 – 220	40	220	48 - 63	40	40×40 - 220
470 074 - 03	40×50 – 180	50	180	60 - 80	50	40×50 - 180
470 074 - 04	40×50 – 220	50	220	60 - 80	50	40×50 - 220
470 074 - 05	40×50 – 280	50	280	60 - 80	50	40×50 - 280
470 075 - 03	40×63 – 180	63	180	76 - 110	63	40×63 - 180
470 075 - 04	40×63 – 220	63	220	76 - 110	63	40×63 - 220
470 075 - 05	40×63 – 280	63	280	76 - 110	63	40×63 - 280
470 071 - 04	50×25 – 140	25	140	30 - 39	25	50×25 - 140
470 072 - 05	50×32 – 140	32	140	38 - 50	32	50×32 - 140
470 072 - 06	50×32 – 180	32	180	38 - 50	32	50×32 - 180
470 073 - 05	50×40 – 180	40	180	48 - 63	40	50×40 - 180
470 073 - 06	50×40 – 220	40	220	48 - 63	40	50×40 - 220
470 074 - 06	50×50 – 180	50	180	60 - 80	50	50×50 - 180
470 074 - 07	50×50 – 240	50	240	60 - 80	50	50×50 - 240
470 074 - 08	50×50 – 340	50	340	60 - 80	50	50×50 - 340
470 075 - 06	50×63 – 180	63	180	76 - 110	63	50×63 - 180
470 075 - 07	50×63 – 240	63	240	76 - 110	63	50×63 - 240
470 075 - 08	50×63 – 340	63	340	76 - 110	63	50×63 - 340
470 076 - 01	50×80 – 190	80	190	105 - 160	80	50×80 - 190
470 076 - 02	50×80 – 250	80	250	105 - 160	80	50×80 - 250
470 076 - 03	50×80 – 340	80	340	105 - 160	80	50×80 - 340

Boring bars are delivered with fitted cutter units PN 24 2429.

CUTTER UNITS BEVELED (BRAZED)

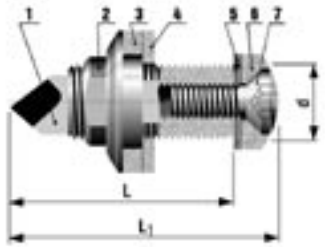

Dimension	d /mm/	L /mm/	L_1 /mm/	∅ t Bar dia	7. Screw	
6 - 17	M6×0,5	17,5	22	19	M3,5×12	6 - 7
6 - 21	M6×0,5	21,0	26	19	M3,5×12	6 - 21
6 - 27	M6×0,5	27,5	32	22	M3,5×15	6 - 27
8 - 28	M8×0,5	28,5	35	25	M5×17,5	6 - 28
10 - 33	M10×0,5	33,0	40	27	M6×18	10 - 33
10 - 38	M10×0,5	38,0	46	32	M6×20	10 - 38
16 - 49	M16×1	49,0	60	40	M8×26	16 - 49
16 - 60	M16×1	60,5	72	50	M8×32,5	16 - 60
24 - 78	M24×1	78,5	95	63	M12×45	24 - 78
24 - 104	M24×1	104,0	122	80	M12×60	24 - 104

1 division of scale = 0,02 mm/∅
cutter units are delivered in the quality K01 or P10

CUTTER UNITS BEVELED EXCHANGEABLE (INSERT)

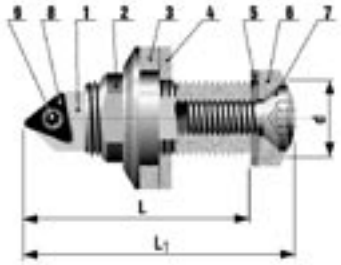

Dimension	d /mm/	L /mm/	L_1 /mm/	∅ Bar dia	7. Screw	8. Insert	9. Screw	
10 - 33	M10×0,5	33,0	40	27	M6×18	CCMT 060202	M2,5×6,5	10 - 33
10 - 38	M10×0,5	38,0	46	32	M6×20	CCMT 060202	M2,5×6,5	10 - 38
16 - 49	M16×1	49,0	60	40	M8×26	TCMT 110202	M2,5×6,5	16 - 49
16 - 60	M16×1	60,5	72	50	M8×32,5	TCMT 110202	M2,5×6,5	16 - 60
24 - 78	M24×1	78,5	95	63	M12×45	TCMT 110202	M2,5×6,5	24 - 78
24 - 104	M24×1	104,0	122	80	M12×60	TCMT 110202	M2,5×6,5	24 - 104

1 division of scale = 0,02 mm/∅
cutter units are delivered without insert

CUTTER FOR BELEVED CUTTER UNITS (BRAZED)

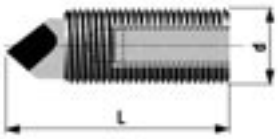

Dimension	d /mm/	L /mm/	
6 - 17	M6×0,5	17,5	6 - 7
6 - 21	M6×0,5	21,0	6 - 21
6 - 27	M6×0,5	27,5	6 - 27
8 - 28	M8×0,5	28,5	8 - 28
10 - 33	M10×0,5	33,0	10 - 33
10 - 38	M10×0,5	38,0	10 - 38
16 - 49	M16×1	49,0	16 - 49
16 - 60	M16×1	60,5	16 - 60
24 - 78	M24×1	78,5	24 - 78
24 - 104	M24×1	104,0	24 - 104

cutter units are delivered in the quality K01 or P10

CUTTER FOR BELEVED CUTTER UNITS EXCHANGEABLE (INSERT)

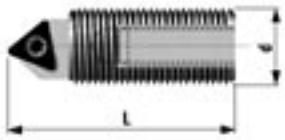

Dimension	d /mm/	L /mm/	Insert	Screw	
10 - 33	M10×0,5	33,0	CCMT 060202	M2,5×6,5	10 - 33
10 - 38	M10×0,5	38,0	CCMT 060202	M2,5×6,5	10 - 38
16 - 49	M16×1	49,0	TCMT 110202	M2,5×6,5	16 - 49
16 - 60	M16×1	60,5	TCMT 110202	M2,5×6,5	16 - 60
24 - 78	M24×1	78,5	TCMT 110202	M2,5×6,5	24 - 78
24 - 104	M24×1	104,0	TCMT 110202	M2,5×6,5	24 - 104

cutter units are delivered without insert

Cutter units

N CUTTER UNITS PERPENDICULAR (BRAZED)

Dimension	d /mm/	L /mm/	L_1 /mm/	∅ Bar dia	7. Screw	
6 - 14	M6×0,5	14,5	19	19	M3,5×10,5	6 - 14
6 - 17	M6×0,5	17,0	22	19	M3,5×10,5	6 - 17
6 - 21	M6×0,5	21,0	26	22	M3,5×15	6 - 21
8 - 23	M8×0,5	23,0	30	25	M5×17,5	8 - 23
10 - 27	M10×0,5	27,0	36	27	M6×16	10 - 27
10 - 32	M10×0,5	32,0	40	32	M6×20	10 - 32
16 - 40	M16×1	40,0	52	40	M8×26	16 - 40
16 - 52	M16×1	52,0	64	50	M8×32,5	16 - 52
24 - 64	M24×1	64,5	81	63	M12×45	24 - 64
24 - 82	M24×1	82,0	100	80	M12×55	24 - 82

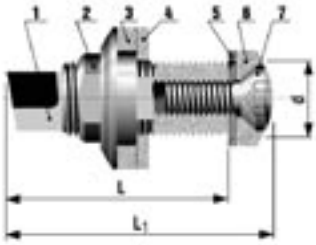

1 division of scale = 0,02 mm/∅
cutter units are delivered in the quality K01 or P10

CUTTER UNITS PERPENDICULAR EXCHANGEABLE (INSERT)

Dimension	d /mm/	L /mm/	L_1 /mm/	∅ Bar dia	7. Screw	8. Insert	9. Screw	
10 - 27	M10×0,5	27,0	36	27	M6×16	CCMT 060202	M2,5×6,5	10 - 27
10 - 32	M10×0,5	32,0	40	32	M6×20	CCMT 060202	M2,5×6,5	10 - 32
16 - 40	M16×1	40,0	52	40	M8×26	TCMT 110202	M2,5×6,5	16 - 40
16 - 52	M16×1	52,0	64	50	M8×32,5	TCMT 110202	M2,5×6,5	16 - 52
24 - 64	M24×1	64,5	81	63	M12×45	TCMT 110202	M2,5×6,5	24 - 64
24 - 82	M24×1	82,0	100	80	M12×55	TCMT 110202	M2,5×6,5	24 - 82

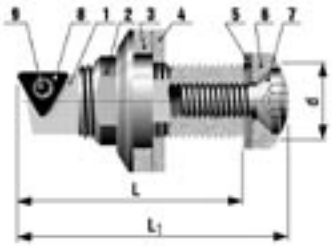

1 division of scale = 0,02 mm/∅
cutter units are delivered without insert

CUTTER FOR PERPENDICULAR CUTTER UNITS (BRAZED)

Dimension	d /mm/	L /mm/	
6 - 14	M6×0,5	14,5	6 - 14
6 - 17	M6×0,5	17,0	6 - 17
6 - 21	M6×0,5	21,0	6 - 21
8 - 23	M8×0,5	23,0	8 - 23
10 - 27	M10×0,5	27,0	10 - 27
10 - 32	M10×0,5	32,0	10 - 32
16 - 40	M16×1	40,0	16 - 40
16 - 52	M16×1	52,0	16 - 52
24 - 64	M24×1	64,5	24 - 64
24 - 82	M24×1	82,0	24 - 82

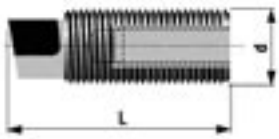

cutter units are delivered in the quality K01 or P10

CUTTER FOR PERPENDICULAR CUTTER UNITS EXCHANGEABLE (INSERT)

Dimension	d /mm/	L /mm/	Insert	Screw	
10 - 27	M10×0,5	27,0	CCMT 060202	M2,5×6,5	10 - 27
10 - 32	M10×0,5	32,0	CCMT 060202	M2,5×6,5	10 - 32
16 - 40	M16×1	40,0	TCMT 110202	M2,5×6,5	16 - 40
16 - 52	M16×1	52,0	TCMT 110202	M2,5×6,5	16 - 52
24 - 64	M24×1	64,5	TCMT 110202	M2,5×6,5	24 - 64
24 - 82	M24×1	82,0	TCMT 110202	M2,5×6,5	24 - 82

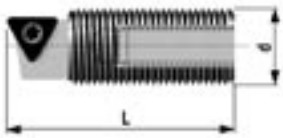

cutter units are delivered without insert

The number position is also supplement number of a work standard

.1 - cutter
.2 - nut
.3 - nut seat
.4 - form insert
.5 - elastic washer
.6 - washer
.7 - screw
.8 - exchangeable insert
.9 - clamping screw
.10 - wrench (for clamping screw)

By order of spare parts for cutter unit give:

term
size of cutting unit
number of standard (including supplementary number)
carbide quality (by order of cutters, or inserts)
number of pieces

Example of order:

Cutter for perpendicular cutter units 16 - 40 PN 24 2427.1 P10 - 10 pieces
Elastic washer 16 - 40 PN 24 2427.5 - 10 pieces

Roughing cutter units

ROUGHING CUTTER UNITS

Dimension	$d_{min.}$-$d_{max.}$ /mm/	L /mm/	1. Screw	2. Shim	3. Insert	4. Cl. screw	
25	30÷39	17	M5×25	5,3	CCMT 060204	M2,5×6	25
32	38÷50	22	M6×30	6,4	CCMT 09T308	M4×8,5	32
40	48÷63	24	M8×35	8,4	CCMT 09T308	M4×8,5	40
50	60÷80	30	M10×40	10,5	CCMT 120408	M5×11,5	50
63	76÷110	34	M12×50	13,0	CCMT 120408	M5×11,5	63
80	105÷160	37	M12×50	13,0	CCMT 120408	M5×11,5	80

Cutter units are delivered without insert

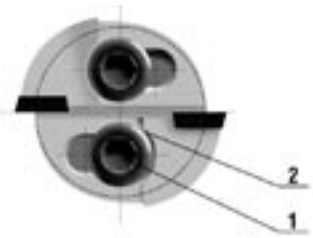

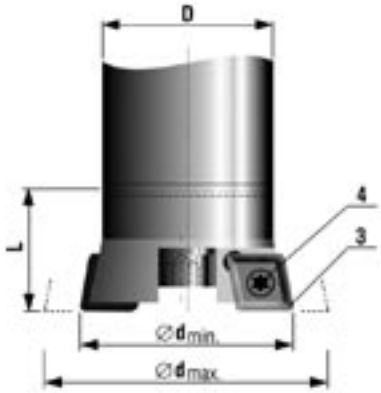

ROUGHING CUTTER UNITS

Dimension	$d_{min.}$-$d_{max.}$ /mm/	L /mm/	1. Screw	2. Shim	Insert	
25	30÷39	20	M5×25	5,3	8 ČSN 220813	25
32	38÷50	25	M6×30	6,4	10 ČSN 220813	32

Cutter units are delivered in the quality K01

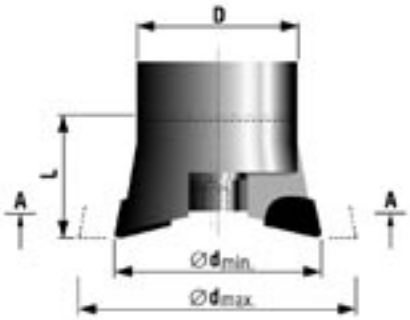

ROUGHING CUTTER UNITS

Dimension	$d_{min.}$-$d_{max.}$ /mm/	L /mm/	1. Screw	2. Shim	3. Screw	4. Clamp	5. Insert	
40	48÷63	27	M8×35	8,4	M5×0,8L	11	TPGN 110308	40
50	60÷80	35	M10×40	10,5	M6×0,75L	15	TPGN 160312	50
63	76÷110	37	M12×50	13,0	M6×0,75L	15	TPGN 160312	63
80	105÷160	45	M12×50	13,0	M8×1L	20	TPGN 220416	80

Cutter units are delivered vithout insert

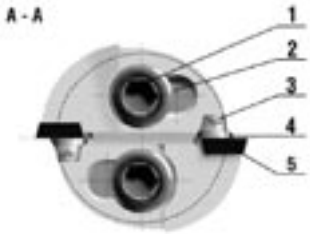

SEMI-PRODUCTS OF BORING BARS

Order No.	Dimension-Marking	D /mm/	L /mm/	
470 067 - 01	40×26 - 400	26,3	400	40×26 - 400
470 067 - 02	40×42 - 400	42,3	400	40×42 - 400
470 067 - 03	40×65 - 400	65,3	400	40×65 - 400
470 067 - 04	50×26 - 400	26,3	400	50×26 - 400
470 067 - 05	50×42 - 400	42,3	400	50×42 - 400
470 067 - 06	50×65 - 400	65,3	400	50×65 - 400
470 067 - 07	50×85 - 400	85,3	400	50×85 - 400

MAGNETIC STAND

Order No.	Axis distance	Lenght	Width	Angle	
591 018 - 01	120	90	25	120°	591018 - 01

The magnetic stands are delivered including the dial indicators ČSN 25 1816 with scale division 0,001 mm.

CENTRING DEVICE

Order No.	Dimension-Marking	Shank	
591 013 - 04	4×300	Morse 4 ČSN 22 0426	4×300
591 013 - 05	5×300	Morse 5 ČSN 22 0426	5×300
591 013 - 06	6×300	Morse 6 ČSN 22 0426	6×300
591 013 - 07	40×300	40 ČSN 22 0432	40×300
591 013 - 08	50×300	50 ČSN 22 0432	50×300
591 013 - 09	40×300	40 DIN 69 871-A	40×300
591 013 - 10	50×300	50 DIN 69 871-A	50×300

Centring devices are delivered including the dial indicators ČSN 25 1811.1 with scale division 0,01 mm.

Jigs

SHARPENING JIG

Order No.	Dimension-Marking	For Cutters		Width×height	Total lenght	
591 011- 01	6	6×14	6×17	20×20	28	6
		6×17	6×21			
591 011 - 02	8	8×23	8×28	22×22	29	8
591 011 - 03	10	10×32	10×38	25×25	35	10
591 011 - 04	16	16×40	16×49	35×35	52	16
		16×52	16×60			
591 011 - 05	24	24×64	24×78	50×50	65	24
		24×82	24×104			

Sharpening jigs are intended for the sharpening of the cutter units PN 24 2427 and PN 24 2428.

STAMPING JIG

Order No.		
591 018- 02		591018-02

Stamping jig is intended for the stamping of the nut seats and form inserts of the cutter units PN 24 2427 and PN 24 2428 into the boring bars'semiproducts after the finish or into the other special boring bars. The jig is delivered complete. There are 5 dimensions of guide pins and rings size 6, 8, 10, 16 and 24 fits to the basic body. The dimensions are identical to the dimensions of the cutter units.

Holders

END MILL HOLDERS
FOR CUTTERS WITH CYLINDRICAL

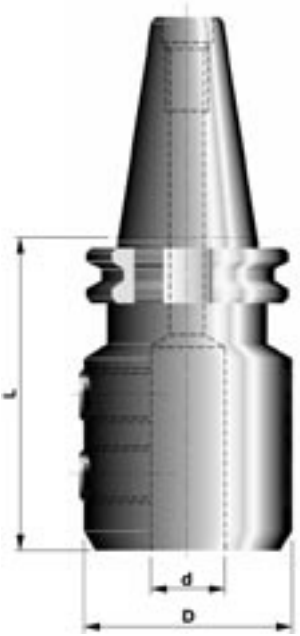

Order No.	Dimension-Marking	d H4 /mm/	D /mm/	L /mm/		
591 014 - 35	40×6 – 50	6	25	50	M6	40×6 – 50
591 014 - 86	40×6 – 100	6	25	100	M6	40×6 – 100
591 014 - 36	40×8 – 50	8	28	50	M8	40×8 – 50
591 014 - 87	40×8 – 100	8	28	100	M8	40×8 – 100
591 014 - 37	40×10 – 50	10	35	50	M10	40×10 – 50
591 014 - 88	40×10 – 100	10	35	100	M10	40×10 – 100
591 014 - 38	40×12 – 50	12	42	50	M12	40×12 – 50
591 014 - 89	40×12 – 100	12	42	100	M12	40×12 – 100
591 014 - 77	40×14 – 50	14	44	50	M12	40×14 – 50
591 014 - 90	40×14 – 100	14	44	100	M12	40×14 – 100
591 014 - 39	40×16 – 63	16	48	63	M14	40×16 – 63
591 014 - 91	40×16 – 100	16	48	100	M14	40×16 – 100
591 014 - 78	40×18 – 63	18	50	63	M14	40×18 – 63
591 014 - 92	40×18 – 100	18	50	100	M14	40×18 – 100
591 014 - 40	40×20 – 63	20	52	63	M16	40×20 – 63
591 014 - 93	40×20 – 100	20	52	100	M16	40×20 – 100
591 014 - 41	40×25 – 100	25	65	100	M18×2	40×25 – 100
591 014 - 94	40×25 – 160	25	65	160	M18×2	40×25 – 160
591 014 - 42	40×32 – 100	32	72	100	M20×2	40×32 – 100
591 014 - 95	40×32 – 160	32	72	160	M20×2	40×32 – 160
591 014 - 43	50×6 – 63	6	25	63	M6	50×6 – 63
591 029 - 01	50×6 – 100	6	25	100	M6	50×6 – 100
591 014 - 44	50×8 – 63	8	28	63	M8	50×8 – 63
591 029 - 02	50×8 – 100	8	28	100	M8	50×8 – 100
591 014 - 45	50×10 – 63	10	35	63	M10	50×10 – 63
591 029 - 03	50×10 – 100	10	35	100	M10	50×10 – 100
591 014 - 46	50×12 – 63	12	42	63	M12	50×12 – 63
591 029 - 04	50×12 – 100	12	42	100	M12	50×12 – 100
591 014 - 79	50×14 – 63	14	44	63	M12	50×14 – 63
591 029 - 05	50×14 – 100	14	44	100	M12	50×14 – 100
591 014 - 47	50×16 – 63	16	48	63	M14	50×16 – 63
591 029 - 06	50×16 – 100	16	48	100	M14	50×16 – 100
591 014 - 80	50×18 – 63	18	50	63	M14	50×18 – 63
591 029 - 07	50×18 – 100	18	50	100	M14	50×18 – 100
591 014 - 48	50×20 – 63	20	52	63	M16	50×20 – 63
591 029 - 08	50×20 – 100	20	52	100	M16	50×20 – 100
591 014 - 49	50×25 – 80	25	65	80	M18×2	50×25 – 80
591 029 - 09	50×25 – 160	25	65	160	M18×2	50×25 – 160
591 014 - 50	50×32 – 100	32	72	100	M20×2	50×32 – 100
591 029 - 10	50×32 – 160	32	72	160	M20×2	50×32 – 160
591 014 - 51	50×40 – 100	40	80	100	M20×2	50×40 – 100

Note:
It is possible to deliver pre-ballanced holders to G 6,3 / 8000 RPM for the special order.

END MILL HOLDERS FOR CUTTERS WITH CYLINDRICAL SHANK AND WELDON FLAT – EXTRA SHORT EXECUTION

Order No.	Dimension-Marking	d H4 /mm/	D /mm/	L /mm/		
591 030 - 08	40×20 – 40	20	50	40	M16	40×20 – 40
591 030 - 09	40×25 – 60	25	50	60	M18×2–12	40×25 – 60
591 030 - 10*	40×32 – 65	32	72	65	M20×2	40×32 – 65

Note:
It is possible to deliver pre-ballanced holders to G 6,3 / 8000 RPM for the special order.

Holders

END MILL HOLDERS FOR CLAMPING CUTTERS WITH CYLINDRICAL SHANK AND WELDON FLAT DIN 1835-E

Order No.	Dimension-Marking	d H4 /mm/	D /mm/	L /mm/		
591 031 - 01	40×6 – 50	6	25	50	M6	40×6 – 50 AD
591 031 - 02	40×8 – 50	8	28	50	M8	40×8 – 50 AD
591 031 - 03	40×10 – 50	10	35	50	M10	40×10 – 50 AD
591 031 - 04	40×12 – 50	12	42	50	M12	40×12 – 50 AD
591 031 - 05	40×14 – 50	14	44	50	M12	40×14 – 50 AD
591 031 - 06	40×16 – 63	16	48	63	M14	40×16 – 63 AD
591 031 - 07	40×18 – 63	18	50	63	M14	40×18 – 63 AD
591 031 - 08	40×20 – 63	20	52	63	M16	40×20 – 63 AD
591 031 - 09	40×25 – 100	25	65	100	M18×2	40×25 – 100 AD
591 031 - 10	40×32 – 100	32	72	100	M20×2	40×32 – 100 AD
591 031 - 11	50×6 – 63	6	25	63	M6	50×6 – 63 AD
591 031 - 12	50×8 – 63	8	28	63	M8	50×8 – 63 AD
591 031 - 13	50×10 – 63	10	35	63	M10	50×10 – 63 AD
591 031 - 14	50×12 – 63	12	42	63	M12	50×12 – 63 AD
591 031 - 15	50×14 – 63	14	44	63	M12	50×14 – 63 AD
591 031 - 16	50×16 – 63	16	48	63	M14	50×16 – 63 AD
591 031 - 17	50×18 – 63	18	50	63	M14	50×18 – 63 AD
591 031 - 18	50×20 – 63	20	52	63	M16	50×20 – 63 AD
591 031 - 19	50×25 – 80	25	65	80	M18×2	50×25 – 80 AD
591 031 - 20	50×32 – 100	32	72	100	M20×2	50×32 – 100 AD

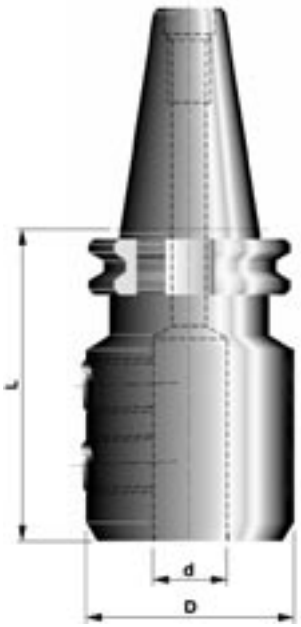

COLLET CHUCKS FOR THE COLLETS DIN 6499(ER)

Order No.	Dimension-Marking	Chucking capacity	D /mm/	L /mm/	Wrench	
591 027 - 01	40×ER16	1÷10	28	63	30/35	40×ER16 AD
591 027 - 25	40×ER16 – 100	1÷10	28	100	30/35	40×ER16 – 100 AD
591 027 - 26	40×ER16 – 160	1÷10	28	160	30/35	40×ER16 – 160 AD
591 027 - 02	40×ER25	1÷16	42	60	38/45	40×ER25 AD
591 027 - 27	40×ER25 – 100	1÷16	42	100	38/45	40×ER25 – 100 AD
591 027 - 28	40×ER25 – 160	1÷16	42	160	38/45	40×ER25 – 160 AD
591 027 - 03	40×ER32	2÷20	50	70	50/55	40×ER32 AD
591 027 - 29	40×ER32 – 100	2÷20	50	100	50/55	40×ER32 – 100 AD
591 027 - 30	40×ER32 – 160	2÷20	50	160	50/55	40×ER32 – 160 AD
591 027 - 04	40×ER40	3÷26	63	80	60/68	40×ER40 AD
591 027 - 31	40×ER40 – 100	3÷26	63	100	60/68	40×ER40 – 100 AD
591 027 - 32	40×ER40 – 160	3÷26	63	160	60/68	40×ER40 – 160 AD
591 027 - 33	50×ER16 – 100	1÷10	28	100	30/35	50×ER16 – 100 AD
591 027 - 34	50×ER16 – 160	1÷10	28	160	30/35	50×ER16 – 160 AD
591 027 - 35	50×ER25 – 100	1÷16	42	100	38/45	50×ER25 – 100 AD
591 027 - 36	50×ER25 – 160	1÷16	42	160	38/45	50×ER25 – 160 AD
591 027 - 05	50×ER32	2÷20	50	70	50/55	50×ER32 AD
591 027 - 37	50×ER32 – 100	2÷20	50	100	50/55	50×ER32 – 100 AD
591 027 - 38	50×ER32 – 160	2÷20	50	160	50/55	50×ER32 – 160 AD
591 027 - 06	50×ER40	3÷26	63	80	60/68	50×ER40 AD
591 027 - 39	50×ER40 – 100	3÷26	63	100	60/68	50×ER40 – 100 AD
591 027 - 40	50×ER40 – 160	3÷26	63	160	60/68	50×ER40 – 160 AD

Note:
It is possible to deliver pre-ballanced holders to G 6,3 / 8000 RPM for the special order.

Collets – page 66

Holders

SHRINK CHUCKS FOR TOOLS SHANK IN THE TOLERANCE H6

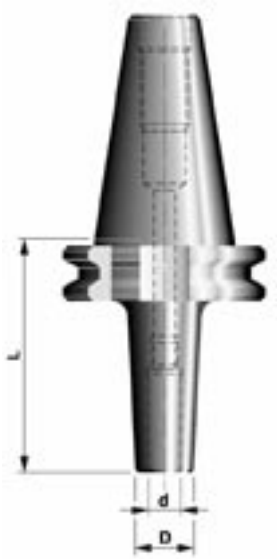

Order No.	Dimension-Marking	d /mm/	D /mm/	L /mm/	
591 033 - 01	40×6	6	12	80	40×6
591 033 - 02	40×8	8	16	80	40×8
591 033 - 03	40×10	10	20	80	40×10
591 033 - 04	40×12	12	24	80	40×12
591 033 - 05	40×14	14	26	80	40×14
591 033 - 06	40×16	16	28	80	40×16
591 033 - 07	40×18	18	31	80	40×18
591 033 - 08	40×20	20	34	80	40×20
591 033 - 09	40×25	25	39	100	40×25
591 033 - 10	50×6	6	12	100	50×6
591 033 - 11	50×8	8	16	100	50×8
591 033 - 12	50×10	10	20	100	50×10
591 033 - 13	50×12	12	24	100	50×12
591 033 - 14	50×14	14	26	100	50×14
591 033 - 15	50×16	16	28	100	50×16
591 033 - 16	50×18	18	31	100	50×18
591 033 - 17	50×20	20	34	100	50×20
591 033 - 18	50×25	25	39	100	50×25

Note:
It is possible to deliver pre-ballanced hplders to G 6,3 / 8000 RPM for the special order.

ADAPTORS FOR TOOLS WITH MORSE TAPER

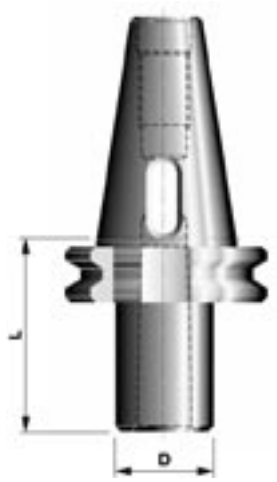

Order No.	Dimension-Marking	d /mm/	D /mm/	L /mm/	
591 002 - 11	40×1	1	25	50	40×1
591 002 - 12	40×2	2	32	50	40×2
591 002 - 13	40×3	3	40	70	40×3
591 002 - 14	40×4	4	48	95	40×4
591 002 - 15	40×5	5	63	185	40×5
591 002 - 42	50×1	1	25	45	50×1
591 002 - 16	50×2	2	32	60	50×2
591 002 - 17	50×3	3	40	65	50×3
591 002 - 18	50×4	4	48	95	50×4
591 002 - 19	50×5	5	63	105	50×5
591 002 - 20	50×6	6	90	250	50×6

Holders

ADAPTORS FOR TOOLS WITH MORSE TAPER SHANK AND THREADED DRAWBAR

Order No.	Dimension-Marking	Morse	D /mm/	L /mm/	
591 003 - 13	40×1	1	25	50	40×1
591 003 - 14	40×2	2	32	50	40×2
591 003 - 15	40×3	3	40	70	40×3
591 003 - 16	40×4	4	48	95	40×4
591 003 - 37	50×1	1	25	45	50×1
591 003 - 17	50×2	2	32	60	50×2
591 003 - 38	50×2 – 120	2	32/24	120	50×2 – 120
591 003 - 18	50×3	3	40	65	50×3
591 003 - 39	50×3 – 140	3	41/32	140	50×3 – 140
591 003 - 19	50×4	4	48	70	50×4
591 003 - 40	50×4 – 160	4	49/38	160	50×4 – 160
591 003 - 20	50×5	5	63	100	50×5
591 003 - 41	50×5 – 180	5	63/51	180	50×5 – 180

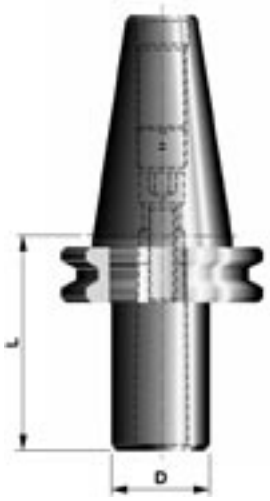

Order No.	Code	Code
591 003 - 13	591 101-80	591 101-88
591 003 - 14	591 101-81	591 101-89
591 003 - 15	591 101-82	591 101-90
591 003 - 16	591 101-83	591 101-91
591 003 - 37	591 101-70	591 101-75
591 003 - 17	591 101-84	591 101-92
591 003 - 38	591 101-71	591 101-76
591 003 - 18	591 101-85	591 101-93
591 003 - 39	591 101-72	591 101-77
591 003 - 19	591 101-86	591 101-94
591 003 - 40	591 101-73	591 101-78
591 003 - 20	591 101-87	591 101-95
591 003 - 41	591 101-74	591 101-79

Order No.	Dimension-Marking	D /mm/	L /mm/	Workmanship	
591 037 - 01	50×40	75	70	A	50×40/A
591 037 - 02	50×40	75	70	B	50×40/B

A - for tools DIN 2080 and ČSN 22 0432
B - for tools DIN 69871 and MAS BT

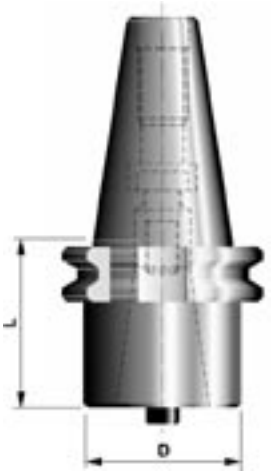

Milling arbors

COMBINATION SHELL MILLING ARBORS FOR CUTTERS WITH LONGITUDINAL KEYWAY OR DIAGONAL DRIVING GROOVE

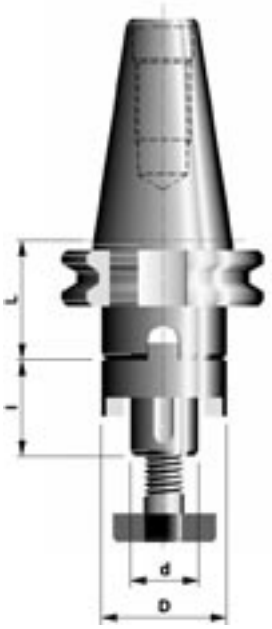

Order No.	Dimension-Marking	d h6 /mm/	d_1 /mm/	l /mm/	l_1 /mm/			
591 005 - 28	40×16	16	32	26	36	16	M8	40×16
591 005 - 39	40×16 – 100	16	32	27	90	16	M8	40×16 – 100
591 005 - 10	40×22	22	40	30	38	22	M10	40×22
591 005 - 40	40×22 – 100	22	40	31	88	22	M10	40×22 – 100
591 005 - 11	40×27	27	48	32	38	27	M12	40×27
591 005 - 41	40×27 – 100	27	48	33	88	27	M12	40×27 – 100
591 005 - 12	40×32	32	58	36	48	32	M16	40×32
591 005 - 42	40×32 – 100	32	58	38	86	32	M16	40×32 – 100
591 005 - 13	40×40	40	70	40	52	40	M20	40×40
591 005 - 43	40×40 – 100	40	70	41	86	40	M20	40×40 – 100
591 005 - 14	40×50	50	90	46	55	50	M24	40×50
591 005 - 44	50×16	16	32	27	45	16	M8	50×16
591 005 - 45	50×16 – 100	16	32	27	90	16	M8	50×16 – 100
591 005 - 46	50×22	22	40	31	43	22	M10	50×22
591 005 - 47	50×22 – 100	22	40	31	88	22	M10	50×22 – 100
591 005 - 15	50×27	27	48	32	43	27	M12	50×27
591 005 - 48	50×27 – 100	27	48	33	88	27	M12	50×27 – 100
591 005 - 16	50×32	32	58	36	41	32	M16	50×32
591 005 - 49	50×32 – 100	32	58	38	86	32	M16	50×32 – 100
591 005 - 17	50×40	40	70	40	41	40	M20	50×40
591 005 - 50	50×40 – 100	40	70	41	86	40	M20	50×40 – 100
591 005 - 18	50×50	50	90	46	46	50	M24	50×50

MILLING ARBORS FOR MILLING CUTTERS WITH CROSS DRIVING GROOVE

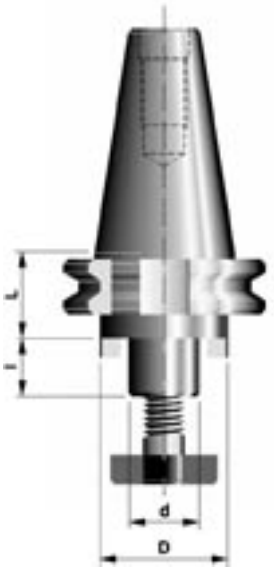

Order No.	Dimension-Marking	d h6 /mm/	D /mm/	l /mm/	L /mm/		
591 032 - 01	40×22	22	50	19	35	M10	40×22
591 032 - 02	40×27	27	50	21	35	M12	40×27
591 032 - 03	40×32	32	78	24	50	M16	40×32
591 032 - 04*	40×40	40	89	27	50	M20	40×40
591 032 - 05	50×22	22	50	19	35	M10	50×22
591 032 - 06	50×27	27	60	21	35	M12	50×27
591 032 - 07	50×32	32	78	24	35	M16	50×32
591 032 - 08*	50×40	40	89	27	50	M20	50×40
591 032 - 09	50×50	50	120	30	50	M24	50×50

***** These dimensions have in addition four thread-holes M12 for the clamping of milling head besides.

Milling arbors

MILLING ARBORS FOR CUTTERS WITH LONGITUDINAL KEYWAY

Order No.	Dimension-Marking	d h6 /mm/	d1 /mm/	l /mm/	l1 /mm/	T	
591 004 - 13	40×16	16	28	30	35	M8	40×16
591 004 - 14	40×22	22	36	40	35	M10	40×22
591 004 - 15	40×27	27	43	60	35	M12	40×27
591 004 - 16	40×32	32	48	60	35	M16	40×32
591 004 - 17	40×40	40	50	60	35	M20	40×40
591 004 - 18	50×16	16	28	30	35	M8	50×16
591 004 - 19	50×22	22	36	40	35	M10	50×22
591 004 - 20	50×27	27	43	60	35	M12	50×27
591 004 - 21	50×32	32	48	60	35	M16	50×32
591 004 - 22	50×40	40	55	60	35	M20	50×40
591 004 - 23	50×50	50	70	60	35	M24	50×50
591 004 - 24	50×60	60	80	60	35	M30	50×60

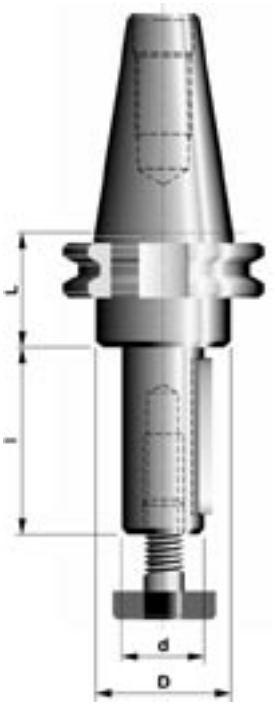

ADAPTORS FOR MILLING CUTTERS

Order No.	Dimension-Marking	d h6 /mm/	D /mm/	l /mm/	L /mm/	d_1 /mm/	M	T	
591 006 - 08	40×40 – 70	40	70	25	50	-	-	M20	40×40 – 70
591 006 - 09	40×40 – 90	40	90	25	50	66,7	M12	-	40×40 – 90
591 006 - 10	50×40 – 70	40	70	25	43	-	-	M20	50×40 – 70
591 006 - 11	50×40 – 90	40	90	25	43	66,7	M12	-	50×40 – 90
591 006 - 12	50×60 – 130	60	130	25	60	101,6	M16	-	50×60 – 130

Arbors and holders

ARBORS FOR DRILL CHUCKS

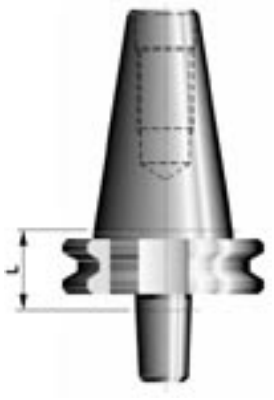

Order No.	Dimension-Marking	L /mm/	
591 024 - 01	40×B10	28	40×B10 A
591 024 - 02	40×B12	28	40×B12 A
591 024 - 03	40×B16	25	40×B16 A
591 024 - 04	40×B18	29	40×B18 A
591 024 - 07	50×B16	25	50×B16 A
591 024 - 08	50×B18	29	50×B18 A

HOLDERS FOR CLAMPING TOOLS WITH ADJUSTABLE SHANK

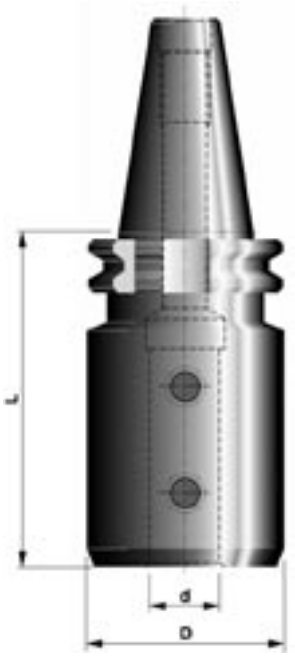

Order No.	Dimension-Marking	d H6 /mm/	D /mm/	L /mm/	
591 001 - 07	40×28 – 80	28	50	80	40×28 – 80
591 001 - 08	40×36 – 115	36	63	115	40×36 – 115
591 001 - 09	40×36 – 170	36	63	170	40×36 – 170
591 001 - 10	50×36 – 75	36	63	75	50×36 – 75
591 001 - 11	50×48 – 105	48	80	105	50×48 – 105
591 001 - 12	50×48 – 200	48	80	200	50×48 – 200

Boring bars

BORING BARS FOR FINISHING

Order No.	Dimension-Marking	D /mm/	L /mm/	d_{min}-d_{max} /mm/	Cutter unit	
470 012 - 06	40×19 – 90	19	90	20÷32	6 - 17, 6 - 21	40×19 – 90
470 014 - 06	40×25 – 125	25	125	31÷44	8 - 28	40×25 – 125
470 016 - 13	40×32 – 125	32	125	43÷58	10 - 38	40×32 – 125
470 016 - 14	40×32 – 160	32	160	43÷58	10 - 38	40×32 – 160
470 017 - 13	40×40 – 160	40	160	56÷72	16 - 49	40×40 – 160
470 017 - 14	40×40 – 200	40	200	56÷72	16 - 49	40×40 – 200
470 018 - 14	40×50 – 160	50	160	66÷90	16 - 60	40×50 – 160
470 018 - 15	40×50 – 200	50	200	66÷90	16 - 60	40×50 – 200
470 018 - 16	40×50 – 250	50	250	66÷90	16 - 60	40×50 – 250
470 019 - 14	40×63 – 160	63	160	88÷120	24 - 78	40×63 – 160
470 019 - 15	40×63 – 200	63	200	88÷120	24 - 78	40×63 – 200
470 019 - 16	40×63 – 250	63	250	88÷120	24 - 78	40×63 – 250
470 012 - 07	50×19 – 90	19	90	20÷32	6 - 7, 6 - 21	50×19 – 90
470 014 - 07	50×25 – 125	25	125	31÷44	8 - 28	50×25 – 125
470 016 - 15	50×32 – 125	32	125	43÷58	10 - 38	50×32 – 125
470 016 - 16	50×32 – 160	32	160	43÷58	10 - 38	50×32 – 160
470 017 - 15	50×40 – 160	40	160	56÷72	16 - 49	50×40 – 160
470 017 - 16	50×40 – 200	40	200	56÷72	16 - 49	50×40 – 200
470 018 - 17	50×50 – 160	50	160	66÷90	16 - 60	50×50 – 160
470 018 - 18	50×50 – 220	50	220	66÷90	16 - 60	50×50 – 220
470 018 - 19	50×50 – 315	50	315	66÷90	16 - 60	50×50 – 315
470 019 - 17	50×63 – 160	63	160	88÷120	24 - 78	50×63 – 160
470 019 - 18	50×63 – 220	63	220	88÷120	24 - 78	50×63 – 220
470 019 - 19	50×63 – 315	63	315	88÷120	24 - 78	50×63 – 315
470 020 - 07	50×80 – 160	80	160	110÷160	24 - 104	50×80 – 160
470 020 - 08	50×80 – 220	80	220	110÷160	24 - 104	50×80 – 220
470 020 - 09	50×80 – 315	80	315	110÷160	24 - 104	50×80 – 315

Boring bars ∅19, ∅25 are delivered with fitted cutter units PN 242428, ∅32, ∅40, ∅50, ∅63, ∅80 are delivered with fitted cutter units PN 24 2421.

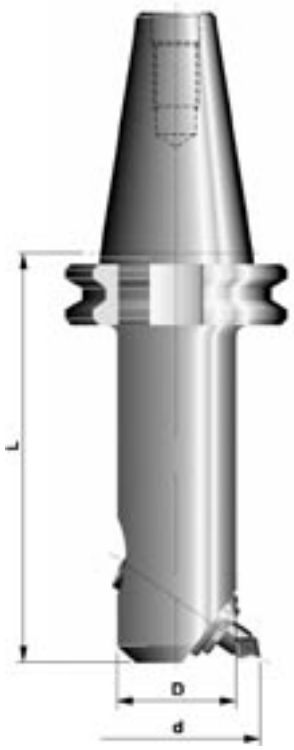

BORING BARS FOR ROUGHING

Order No.	Dimension-Marking	D /mm/	L /mm/	d_{min}-d_{max} /mm/	Cutter unit	
470 071 - 05	40×25 – 140	25	140	30÷39	25	40×25 – 140
470 072 - 07	40×32 – 140	32	140	38÷50	32	40×32 – 140
470 072 - 08	40×32 – 180	32	180	38÷50	32	40×32 – 180
470 073 - 07	40×40 – 180	40	180	48÷63	40	40×40 – 180
470 073 - 08	40×40 – 220	40	220	48÷63	40	40×40 – 220
470 074 - 09	40×50 – 180	50	180	60÷80	50	40×50 – 180
470 074 - 10	40×50 – 220	50	220	60÷80	50	40×50 – 220
470 074 - 11	40×50 – 280	50	280	60÷80	50	40×50 – 280
470 075 - 09	40×63 – 180	63	180	76÷110	63	40×63 – 180
470 075 - 10	40×63 – 220	63	220	76÷110	63	40×63 – 220
470 075 - 11	40×63 – 280	63	280	76÷110	63	40×63 – 280
470 071 - 06	50×25 – 140	25	140	30÷39	25	50×25 – 140
470 072 - 09	50×32 – 140	32	140	38÷50	32	50×32 – 140
470 072 - 10	50×32 – 180	32	180	38÷50	32	50×32 – 180
470 073 - 09	50×40 – 180	40	180	48÷63	40	50×40 – 180
470 073 - 10	50×40 – 220	40	220	48÷63	40	50×40 – 220
470 074 - 12	50×50 – 180	50	180	60÷80	50	50×50 – 180
470 074 - 13	50×50 – 240	50	240	60÷80	50	50×50 – 240
470 074 - 14	50×50 – 340	50	340	60÷80	50	50×50 – 340
470 075 - 12	50×63 – 180	63	180	76÷110	63	50×63 – 180
470 075 - 13	50×63 – 240	63	240	76÷110	63	50×63 – 240
470 075 - 14	50×63 – 340	63	340	76÷110	63	50×63 – 340
470 076 - 04	50×80 – 190	80	190	105÷160	80	50×80 – 190
470 076 - 05	50×80 – 250	80	250	105÷160	80	50×80 – 250
470 076 - 06	50×80 – 340	80	340	105÷160	80	50×80 – 340

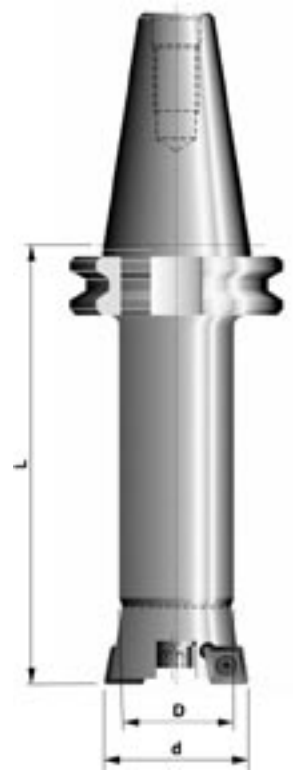

Semi-products of boring bars

SEMI-PRODUCTS OF BORING BARS

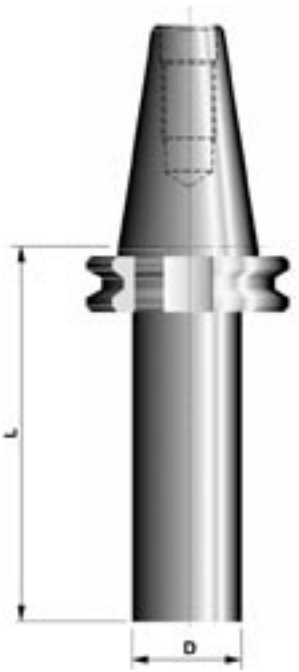

Order No.	Dimension-Marking	D /mm/	L /mm/	
470 067 - 15	40×26 – 400	26,3	400	40×26 – 400
470 067 - 16	40×42 – 400	42,3	400	40×42 – 400
470 067 - 17	40×65 – 400	65,3	400	40×65 – 400
470 067 - 18	50×26 – 400	26,3	400	50×26 – 400
470 067 - 19	50×42 – 400	42,3	400	50×42 – 400
470 067 - 20	50×65 – 400	65,3	400	50×65 – 400
470 067 - 21	50×85 – 400	85,3	400	50×85 – 400

CONTROL ARBORS

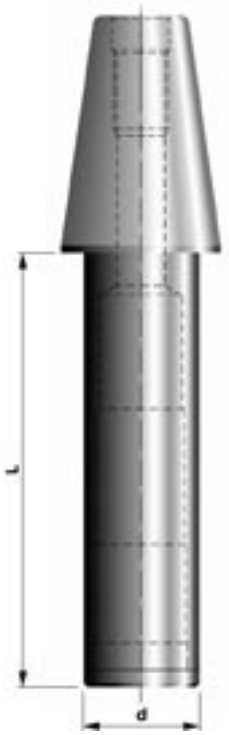

Order No.	Dimension-Marking	d $^{\pm 0,003}$ /mm/	L /mm/	Max. run-out	
591 034 - 01	40	40	300	0,003	40
591 034 - 02	50	50	300	0,003	50

Holders

END MILL HOLDERS FOR CLAMPING CUTTERS WITH CYLINDRICAL SHANK AND WELDON FLAT DIN 1835-B

Order No.	Dimension-Marking	d H4 /mm/	D /mm/	D_1 /mm/	l /mm/	L /mm/		
591 041 - 01	40×6 – 50	6	25	50	23	50	M6	40×6 – 50
591 041 - 02	40×8 – 50	8	28	50	23	50	M8	40×8 – 50
591 041 - 03	40×10 – 50	10	35	50	20	50	M10	40×10 – 50
591 041 - 04	40×12 – 50	12	42	50	20	50	M12	40×12 – 50
591 041 - 05	40×14 – 50	14	46	50	20	50	M12	40×14 – 50
591 041 - 06	40×16 – 63	16	48	—	—	63	M14	40×16 – 63
591 041 - 07	40×18 – 63	18	50	—	—	63	M14	40×18 – 63
591 041 - 08	40×20 – 63	20	52	—	—	63	M16	40×20 – 63
591 041 - 09	40×25 – 100	25	65	—	—	100	M18×2	40×25 – 100
591 041 - 10	40×32 – 100	32	72	—	—	100	M20×2	40×32 – 100
591 041 - 11	50×6 – 63	6	25	80	30	63	M6	50×6 – 63
591 041 - 12	50×8 – 63	8	28	80	30	63	M8	50×8 – 63
591 041 - 13	50×10 – 63	10	35	80	30	63	M10	50×10 – 63
591 041 - 14	50×12 – 63	12	42	80	30	63	M12	50×12 – 63
591 041 - 15	50×14 – 63	14	46	80	30	63	M12	50×14 – 63
591 041 - 16	50×16 – 63	16	48	80	30	63	M14	50×16 – 63
591 041 - 17	50×18 – 63	18	50	80	30	63	M14	50×18 – 63
591 041 - 18	50×20 – 63	20	52	80	30	63	M16	50×20 – 63
591 041 - 19	50×25 – 80	25	65	80	45	80	M18×2	50×25 – 80
591 041 - 20	50×32 – 100	32	72	80	72	100	M20×2	50×32 – 100
591 041 - 21	50×40 – 100	40	80	—	—	100	M20×2	50×40 – 100

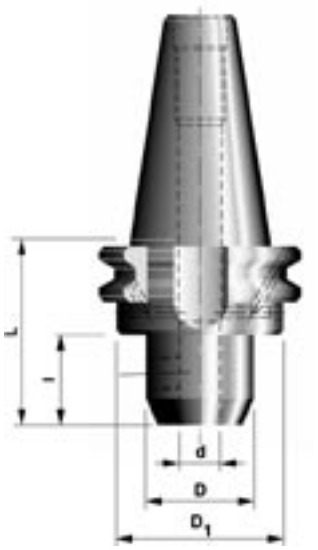

Note:
It is possible to deliver pre-ballanced holders to G 6,3 / 8000 RPM for the special order.

END MILL HOLDERS FOR CUTTERS WITH CYLINDRICAL SHANK AND WELDON FLAT DIN 1835-E

Order No.	Dimension-Marking	d H4 /mm/	D /mm/	D_1 /mm/	l /mm/	L /mm/		
591 031 - 42	40×6 – 50	6	25	50	23	50	M6	40×6 – 50 B
591 031 - 43	40×8 – 50	8	28	50	23	50	M8	40×8 – 50 B
591 031 - 44	40×10 – 63	10	35	50	20	63	M10	40×10 – 63 B
591 031 - 45	40×12 – 63	12	42	50	20	63	M12	40×12 – 63 B
591 031 - 46	40×14 – 63	14	46	50	20	63	M12	40×14 – 63 B
591 031 - 47	40×16 – 63	16	48	—	—	63	M14	40×16 – 63 B
591 031 - 48	40×18 – 63	18	50	—	—	63	M14	40×18 – 63 B
591 031 - 49	40×20 – 63	20	52	—	—	63	M16	40×20 – 63 B
591 031 - 50	40×25 – 100	25	65	—	—	100	M18×2	40×25–100 B
591 031 - 51	40×32 – 100	32	72	—	—	100	M20×2	40×32–100 B
591 031 - 52	50×6 – 63	6	25	80	30	63	M6	50×6 – 63 B
591 031 - 53	50×8 – 63	8	28	80	30	63	M8	50×8 – 63 B
591 031 - 54	50×10 – 63	10	35	80	30	63	M10	50×10 – 63 B
591 031 - 55	50×12 – 63	12	42	80	30	63	M12	50×12 – 63 B
591 031 - 56	50×14 – 63	14	46	80	30	63	M12	50×14 – 63 B
591 031 - 57	50×16 – 63	16	48	80	30	63	M14	50×16 – 63 B
591 031 - 58	50×18 – 63	18	50	80	30	63	M14	50×18 – 63 B
591 031 - 59	50×20 – 63	20	52	80	30	63	M16	50×20 – 63 B
591 031 - 60	50×25 – 80	25	65	80	45	80	M18×2	50×25 – 80 B
591 031 - 61	50×32 – 100	32	72	80	72	100	M20×2	50×32–100 B
591 031 - 62	50×40 – 100	40	80	—	—	100	M20×2	50×40–100 B

Collet and hydralic-expansion chucks

COLLET CHUCKS
FOR THE COLLETS DIN 6499 (ER)

Order No.	Dimension-Marking	Chucking capacity	D /mm/	L /mm/	Wrench	
591 027 - 07	40×ER25	1÷16	60	42	38/45	40×ER25 B
591 027 - 08	40×ER32	2÷20	70	50	50/55	40×ER32 B
591 027 - 09	40×ER40	3÷26	80	63	60/68	40×ER40 B
591 027 - 10	50×ER32	2÷20	70	50	50/55	50×ER32 B
591 027 - 11	50×ER40	3÷26	80	63	60/68	50×ER40 B

Note:
It is possible to deliver pre-ballanced collet chucks to G 6,3 / 8000 RPM for the special order.
Collets – see page 66

HYDRAULIC-EXPANSION CHUCKS

Order No.	Dimension-Marking	d /mm/	D /mm/	D_1 /mm/	l /mm/	L /mm/	
591 036 - 01	40×6	6	28	50	50	80	40×6
591 036 - 02	40×8	8	30	50	50	80	40×8
591 036 - 03	40×10	10	36	50	50	80	40×10
591 036 - 04	40×12	12	40	50	50	80	40×12
591 036 - 05	40×14	14	40	50	50	80	40×14
591 036 - 06	40×16	16	45	50	50	80	40×16
591 036 - 07	40×18	18	45	50	50	80	40×18
591 036 - 08	40×20	20	50	50	50	80	40×20
591 036 - 09	40×25	25	50	50	80	110	40×25
591 036 - 10	50×6	6	28	80	55	100	50×6
591 036 - 11	50×8	8	30	80	55	100	50×8
591 036 - 12	50×10	10	36	80	55	100	50×10
591 036 - 13	50×12	12	40	80	55	100	50×12
591 036 - 14	50×14	14	40	80	60	100	50×14
591 036 - 15	50×16	16	45	80	60	100	50×16
591 036 - 16	50×18	18	45	80	60	100	50×18
591 036 - 17	50×20	20	50	80	60	100	50×20
591 036 - 18	50×25	25	60	80	60	100	50×25
591 036 - 19	50×32	32	70	80	60	100	50×32

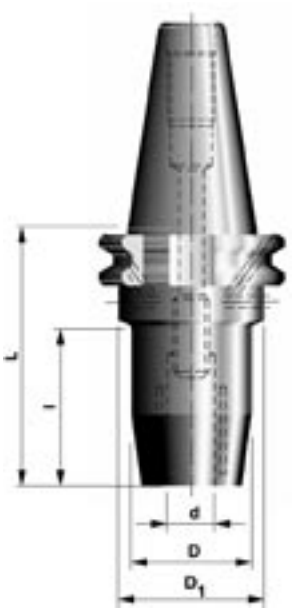

Adaptors

Order No.	Dimension-Marking	Morse	D /mm/	D_1 /mm/	l /mm/	L /mm/	
591 039 - 01	40×1	1	25	50	20	50	40×1
591 039 - 02	40×2	2	32	50	20	50	40×2
591 039 - 03	40×3	3	40	50	45	70	40×3
591 039 - 04	40×4	4	60	—	—	95	40×4
591 039 - 05	50×1	1	25	80	10	45	50×1
591 039 - 06	50×2	2	32	80	8	60	50×2
591 039 - 07	50×3	3	40	80	9	65	50×3
591 039 - 08	50×4	4	48	80	16	95	50×4
591 039 - 09	50×5	5	63	80	38	105	50×5

ADAPTORS
FOR TOOLS WITH MORSE TAPER

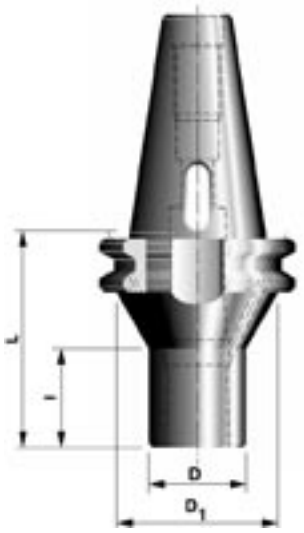

Order No.	Dimension-Marking	Morse	D /mm/	D_1 /mm/	l /mm/	L /mm/	
591 038 - 01	40×1	1	25	50	20	50	40×1
591 038 - 02	40×2	2	32	50	20	50	40×2
591 038 - 03	40×3	3	40	50	45	70	40×3
591 038 - 04	40×4	4	63	—	—	95	40×4
591 038 - 05	50×1	1	25	80	10	45	50×1
591 038 - 06	50×2	2	32	80	8	60	50×2
591 038 - 07	50×3	3	40	80	9	65	50×3
591 038 - 08	50×4	4	63	80	50	70	50×4
591 038 - 09	50×5	5	78	—	—	100	50×5

ADAPTORS FOR TOOLS WITH MORSE TAPER
SHANK AND THREADED DRAWBAR

Milling arbors

MILLING ARBORS
FOR CUTTERS DRIVING SLOT

Order No.	Dimension-Marking	d h6 /mm/	D /mm/	D_1 /mm/	l /mm/	l_1 /mm/	L /mm/		
591 040 - 01	40×16	16	38	--	17	16	35	M8×25	40×16
591 040 - 02	40×22	22	48	--	19	16	35	M10×25	40×22
591 040 - 03	40×27	27	50	--	21	16	35	M12×35	40×27
591 040 - 04	40×32	32	78	--	24	--	50	M16×35	40×27
591 040 - 05	40×40	40	89	--	27	--	50	M20×40	40×40
591 040 - 06	50×16	16	38	78	17	6	35	M8×25	50×16
591 040 - 07	50×22	22	48	78	19	6	35	M10×25	50×22
591 040 - 08	50×27	27	60	78	21	6	35	M12×35	50×27
591 040 - 09	50×32	32	78	--	24	16	35	M16×35	50×32
591 040 - 10	50×40	40	89	--	27	--	50	M20×40	50×40

COLLET CHUCKS
FOR THE COLLETS DIN 6499(ER)

Order No.	Dimension-Marking	Chucking capacity	D /mm/	L /mm/	Wrench	
591 027 - 12	40×ER25	1÷16	42	60	38/45	40×ER25
591 027 - 13	40×ER32	2÷20	50	50	50/55	40×ER32
591 027 - 14	40×ER40	3÷26	63	70	60/68	40×ER40
591 027 - 15	50×ER32	2÷20	50	63	50/55	50×ER32
591 027 - 16	50×ER40	3÷26	63	63	60/68	50×ER40

Note:
Collets – see page 66

Holders

Order No.	Dimension-Marking	d H4 /mm/	D /mm/	L /mm/		
591 014 - 01	40×6 – 50	6	25	50	M6	40×6 – 50
591 014 - 02	40×8 – 50	8	28	50	M8	40×8 – 50
591 014 - 03	40×10 – 50	10	35	50	M10	40×10 – 50
591 014 - 04	40×12 – 50	12	42	50	M12	40×12 – 50
591 014 - 69	40×14 – 50	14	44	50	M12	40×14 – 50
591 014 - 05	40×16 – 63	16	48	63	M14	40×16 – 63
591 014 - 70	40×18 – 63	20	50	63	M14	40×18 – 63
591 014 - 06	40×20 – 63	20	52	63	M16	40×20 – 63
591 014 - 07	40×25 – 80	25	65	80	M18×2	40×25 – 80
591 014 - 08	40×32 – 80	32	72	80	M20×2	40×32 – 80
591 014 - 09	50×6 – 63	6	25	63	M6	50×6 – 63
591 014 - 10	50×8 – 63	8	28	63	M8	50×8 – 63
591 014 - 11	50×10 – 63	10	35	63	M10	50×10 – 63
591 014 - 12	50×12 – 63	12	42	63	M12	50×12 – 63
591 014 - 71	50×14 – 63	14	44	63	M12	50×14 – 63
591 014 - 13	50×16 – 63	16	48	63	M14	50×16 – 63
591 014 - 72	50×18 – 63	18	50	63	M14	50×18 – 63
591 014 - 14	50×20 – 63	20	52	63	M16	50×20 – 63
591 014 - 15	50×25 – 80	25	65	80	M18×2	50×25 – 80
591 014 - 16	50×32 – 80	32	72	80	M20×2	50×32 – 80
591 014 - 17	50×40 – 95	40	80	95	M20×2	50×40 – 95

END MILL HOLDERS FOR CLAMPING CUTTERS
WITH CYLINDRICAL SHANK AND WELDON FLAT 1835-B

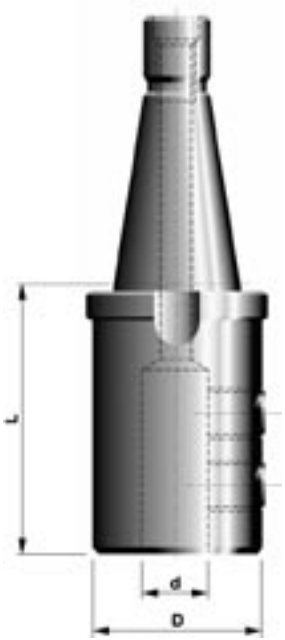

Order No.	Dimension-Marking	d H4 /mm/	D /mm/	L /mm/		
591 031 - 21	40×6 – 52	6	25	52	M6	40×6 – 52
591 031 - 22	40×8 – 52	8	28	52	M8	40×8 – 52
591 031 - 23	40×10 – 52	10	35	52	M10	40×10 – 52
591 031 - 24	40×12 – 52	12	42	52	M12	40×12 – 52
591 031 - 25	40×14 – 52	14	44	52	M12	40×14 – 52
591 031 - 26	40×16 – 52	16	48	52	M14	40×16 – 52
591 031 - 27	40×18 – 52	20	50	52	M14	40×18 – 52
591 031 - 28	40×20 – 52	20	52	52	M16	40×20 – 52
591 031 - 29	40×25 – 52	25	65	52	M18×2	40×25 – 52
591 031 - 30	40×32 – 80	32	72	80	M20×2	40×32 – 80
591 031 - 31	50×6 – 52	6	25	52	M6	50×6 – 52
591 031 - 32	50×8 – 52	8	28	52	M8	50×8 – 52
591 031 - 33	50×10 – 52	10	35	52	M10	50×10 – 52
591 031 - 34	50×12 – 52	12	42	52	M12	50×12 – 52
591 031 - 35	50×14 – 52	14	44	52	M12	50×14 – 52
591 031 - 36	50×16 – 52	16	48	52	M14	50×16 – 52
591 031 - 37	50×18 – 52	18	50	52	M14	50×18 – 52
591 031 - 38	50×20 – 52	20	52	52	M16	50×20 – 52
591 031 - 39	50×25 – 52	25	65	52	M18×2	50×25 – 52
591 031 - 40	50×32 – 80	32	72	80	M20×2	50×32 – 80
591 031 - 41	50×40 – 80	40	80	80	M20×2	50×40 – 80

END MILL HOLDERS FOR CUTTERS CLAMPING
WITH CYLINDRICAL SHANK AND WELDON FLAT DIN 1835-E

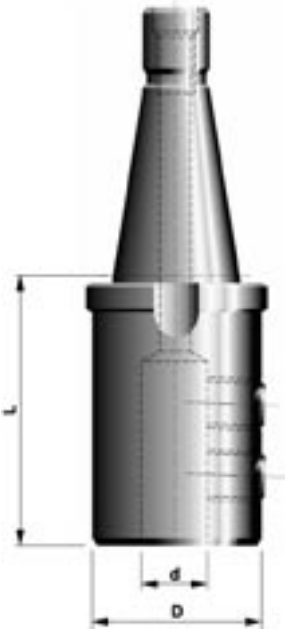

Adaptors

ADAPTORS FOR TOOLS WITH MORSE TAPER

Order No.	Dimension-Marking	Morse	D /mm/	L /mm/	
591 002 - 21	40×1	1	25	50	40×1
591 002 - 22	40×2	2	32	50	40×2
591 002 - 44	40×2 – 110	2	32	110	40×2 – 110
591 002 - 23	40×3	3	40	65	40×3
591 002 - 45	40×3 – 135	3	40	135	40×3 – 135
591 002 - 24	40×4	4	48	95	40×4
591 002 - 46	40×4 – 160	4	48	160	40×4 – 160
591 002 - 25	40×5	5	63	170	40×5
591 002 - 47	40×5 – 210	5	63	210	40×5 – 210
591 002 - 43	50×1	1	25	45	50×1
591 002 - 26	50×2	2	32	60	50×2
591 002 - 48	50×2 – 115	2	32	115	50×2 – 115
591 002 - 27	50×3	3	40	65	50×3
591 002 - 49	50×3 – 140	3	40	140	50×3 – 140
591 002 - 28	50×4	4	48	70	50×4
591 002 - 50	50×4 – 165	4	48	165	50×4 – 165
591 002 - 29	50×5	5	63	105	50×5
591 002 - 51	50×5 – 215	5	63	215	50×5 – 215
591 002 - 30	50×6	6	90	250	50×6
591 002 - 52	50×6 – 295	6	97	295	50×6 – 295

ADAPTORS FOR TOOLS WITH MORSE TAPER AND THREADED DRAWBAR

Order No.	Dimension-Marking	Morse	D /mm/	L /mm/	
591 003 - 21	40×1	1	25	50	40×1
591 003 - 22	40×2	2	32	60	40×2
591 003 - 23	40×3	3	40	80	40×3
591 003 - 24	40×4	4	48	110	40×4
591 003 - 25	50×2	2	32	60	50×2
591 003 - 26	50×3	3	40	65	50×3
591 003 - 27	50×4	4	48	80	50×4
591 003 - 28	50×5	5	63	120	50×5

Order No.	Code	
591 003 - 21	591 101 - 80	591 101 - 88
591 003 - 22	591 101 - 81	591 101 - 89
591 003 - 23	591 101 - 82	591 101 - 90
591 003 - 24	591 101 - 83	591 101 - 91
591 003 - 25	591 101 - 84	591 101 - 92
591 003 - 26	591 101 - 85	591 101 - 93
591 003 - 27	591 101 - 86	591 101 - 94
591 003 - 28	591 101 - 87	591 101 - 95

Adaptors

ADAPTORS

Order No.	Dimension-Marking	D /mm/	L /mm/	Workmanship	
591 037 - 03	50×40	70	50	A	50×40/A
591 037 - 04	50×40	70	50	B	50×40/B

A - for tools DIN 2080 a ČSN 22 0432
B - for tools DIN 69871 a MAS BT

COMBINATION SHELL MILLING ARBORS

FOR CUTTERS WITH LONGITUDIANAL KEYWAY OR DIAGONAL DRIVING GROOVE

Order No.	Dimension-Marking	d h6 /mm/	d_1 /mm/	l /mm/	l_1 /mm/		T	
591 005 - 38	40×16	16	32	26	36	16	M8	40×16
591 005 - 29	40×22	22	40	30	38	22	M10	40×22
591 005 - 30	40×27	27	48	32	38	27	M12	40×27
591 005 - 31	40×32	32	58	36	36	32	M16	40×32
591 005 - 32	40×40	40	70	40	36	40	M20	40×40
591 005 - 33	40×50	50	90	46	34	50	M24	40×50
591 005 - 56	50×16	16	32	27	45	16	M8	50×16
591 005 - 57	50×22	22	40	31	43	22	M10	50×22
591 005 - 34	50×27	27	48	32	43	27	M12	50×27
591 005 - 35	50×32	32	58	36	41	32	M16	50×32
591 005 - 36	50×40	40	70	40	41	40	M20	50×40
591 005 - 37	50×50	50	90	46	39	50	M24	50×50

Milling arbors

MILLING ARBORS FOR CUTTERS
WITH DIAGONAL DRIVING SLOT

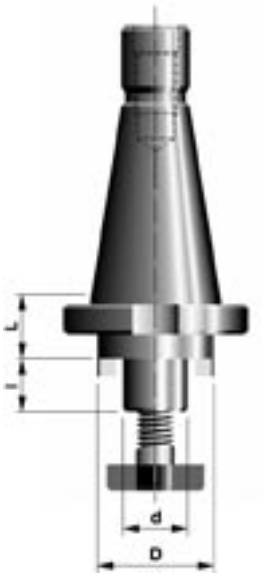

Order No.	Dimension-Marking	d h6 /mm/	D /mm/	l /mm/	L /mm/	T	
591 005 - 63	40×22	22	50	19	30	M10	40×22
591 005 - 64	40×27	27	60	21	30	M12	40×27
591 005 - 65	40×32	32	78	24	30	M16	40×32
591 005 - 66*	40×40	40	89	27	17	M20	40×40
591 005 - 68	50×22	22	50	19	35	M10	50×22
591 005 - 69	50×27	27	60	21	35	M12	50×27
591 005 - 70	50×32	32	78	24	40	M16	50×32
591 005 - 71*	50×40	40	89	27	33	M20	50×40
591 005 - 72	50×50	50	120	30	40	M24	50×50

* These dimensions have in addition four thread-holes M12 for the clamping of milling head besides.

MILLING ARBORS FOR CUTTERS
WITH LONGITUDINAL KEYWAY

Order No.	Dimension-Marking	d h6 /mm/	d1 /mm/	l /mm/	l1 /mm/	T	
591 004 - 42	40×16	16	28	30	35	M8	40×16
591 004 - 43	40×22	22	36	40	35	M10	40×22
591 004 - 44	40×27	27	43	60	35	M12	40×27
591 004 - 45	40×32	32	48	60	35	M16	40×32
591 004 - 46	40×40	40	56	60	35	M20	40×40
591 004 - 47	50×16	16	28	30	35	M8	50×16
591 004 - 48	50×22	22	36	40	35	M10	50×22
591 004 - 49	50×27	27	43	60	35	M12	50×27
591 004 - 50	50×32	32	48	60	35	M16	50×32
591 004 - 51	50×40	40	55	60	35	M20	50×40
591 004 - 52	50×50	50	70	60	35	M24	50×50
591 004 - 53	50×60	60	80	60	35	M30	50×60

Milling arbors

MILLING ARBORS FOR MILLING CUTTERS

Order No.	Dimension-Marking	d h6 /mm/	D /mm/	l /mm/	L /mm/	d_1 /mm/	M	T	
591 006 - 18	40×40×70	40	70	25	27	—	—	M20	40×40×70
591 006 - 19	40×40×90	40	90	25	42	66,7	M12	—	40×40×90
591 006 - 20	50×40×70	40	70	25	40	—	—	M20	50×40×70
591 006 - 21	50×40×90	40	90	25	40	66,7	M12	—	50×40×90
591 006 - 22	50×60×130	60	130	25	60	101,6	M16	—	50×60×130

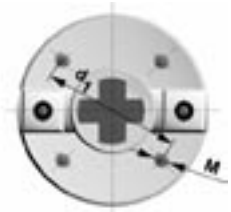

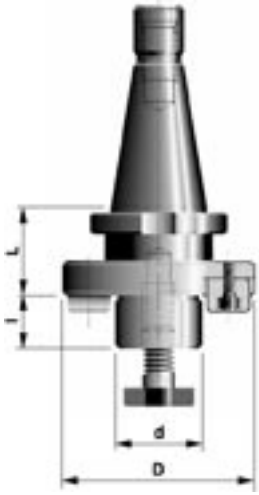

T ARBORS FOR DRILL CHUCKS

Order No.	Dimension-Marking	L /mm/	
591 024 - 09	40×B10	20	40×B10
591 024 - 10	40×B12	20	40×B12
591 024 - 11	40×B16	22	40×B16
591 024 - 12	40×B18	22	40×B18
591 024 - 15	50×B16	25	50×B16
591 024 - 16	50×B18	25	50×B18

Control bars

CONTROL BARS

Order No.	Dimension-Marking	$d^{\pm 0,003}$ /mm/	L /mm/	Max. run-out	
591 034 - 03	40	40	300	0,003	40
591 034 - 04	50	50	300	0,003	50

CLAMPING PINS

A - WITH CENTRAL COOLANT HOLE

B - WITHOUT CENTRAL HOLE

Order No.	K	G	d /mm/	d_1 /mm/	l /mm/	l1 /mm/	Workmanship	
591 016 - 02	40	M16	17	19	26	54	DIN 69872-A	40 A
591 016 - 04	50	M24	25	28	34	74	DIN 69872-A	50 A
591 016 - 07	40	M16	17	19	26	54	DIN 69872-B	40 B
591 016 - 09	50	M24	25	28	34	74	DIN 69872-B	50 B
591 016 - 31	40	M16	17	25	25	53	MAHO-A	40 MAHO

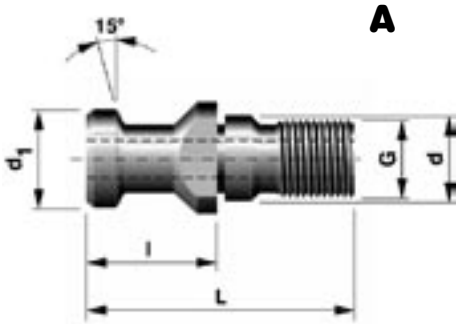

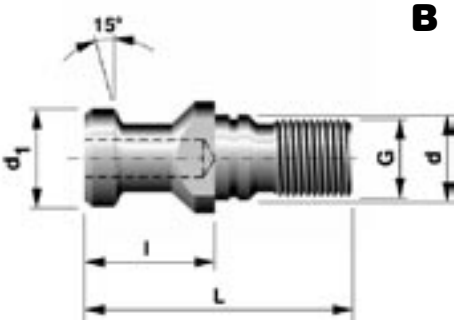

Holders

CLAMPING PINS

Order No.	K	G	d /mm/	d_1 /mm/	l /mm/	L /mm/	Workmanship	
591 016 - 11	40	M16	17	19	26	54	ČSN 220451-A	40 A
591 016 - 13	50	M24	25	28	34	74	ČSN 220451-A	50 A
591 016 - 14	40	M16	17	18,95	16,4	44,5	ČSN 220451-B	40 B
591 016 - 16	50	M24	25	29,1	25,55	65,5	ČSN 220451-B	50 B

B

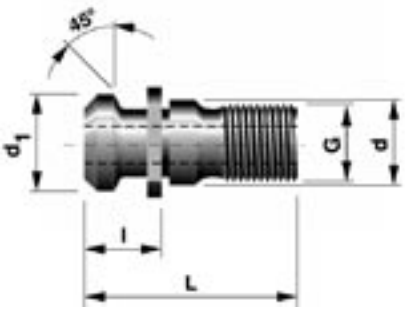

A

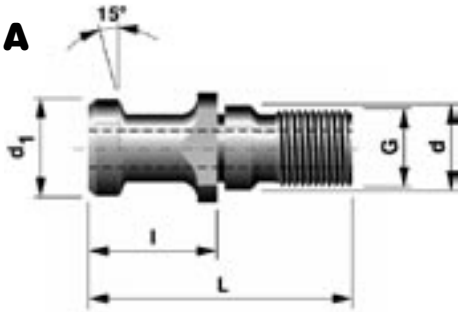

END MILL HOLDERS FOR CUTTERS WITH CYLINDRICAL SHANK AND WELDON FLAT DIN 1835-B

Order No.	Dimension-Marking	d H4 /mm/	D /mm/	L /mm/		
591 035 - 01	20×4	4	20	90	M4	20×4
591 035 - 02	20×5	5	20	90	M5	20×5
591 035 - 03	20×6	6	20	90	M6	20×6
591 035 - 04	20×8	8	20	90	M6	20×8
591 035 - 05	20×10	10	20	90	M6	20×10
591 035 - 06	20×12	12	20	90	M6	20×12
591 035 - 07	20×4	4	20	130	M4	20×4
591 035 - 08	20×5	5	20	130	M5	20×5
591 035 - 09	20×6	6	20	130	M6	20×6
591 035 - 10	20×8	8	20	130	M6	20×8
591 035 - 11	20×10	10	20	130	M6	20×10
591 035 - 12	20×12	12	20	130	M6	20×12
591 035 - 13	25×14	14	25	100	M12	25×14
591 035 - 14	25×16	16	25	100	M14	25×16
591 035 - 15	25×14	14	25	150	M12	25×14
591 035 - 16	25×16	16	25	150	M14	25×16

Collet chucks

COLLET CHUCKS
FOR THE COLLETS DIN 6499(ER)

Order No.	Dimension-Marking	Chucking capacity	D /mm/	D1 /mm/	L /mm/	Wrench	
591 027 - 41	16×ER11	1÷6	16	19	120	591 048-01	16×ER11
591 027 - 42	16×ER11	1÷6	16	19	180	591 048-01	16×ER11–180
591 027 - 43	25×ER16	1÷10	25	28	140	591 048-02	25×ER16
591 027 - 44	25×ER16	1÷10	25	28	180	591 048-02	25×ER16–180

Note:
Collets – see page 66

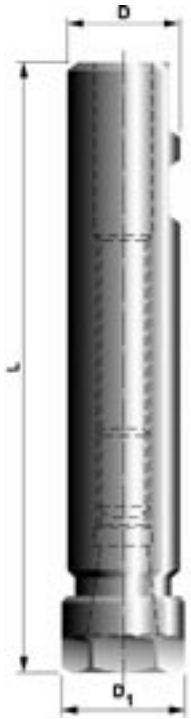

TAPER WIPES

Order No.	Dimension-Marking	
591 047 - 01	MORSE 1	1
591 047 - 02	MORSE 2	2
591 047 - 03	MORSE 3	3
591 047 - 04	MORSE 4	4
591 047 - 05	MORSE 5	5
591 047 - 06	MORSE 6	6
591 047 - 07	SK 40	40
591 047 - 08	SK 50	50

Holders, Collet chucks

END MILL HOLDERS FOR CLAMPING CUTTERS
WITH CYLINDRICAL SHANK AND WELDON FLAT DIN 1835-B

Order No.	Dimension-Marking	d H4 /mm/	D /mm/	L /mm/		
504 003 - 01	HSK-A63×6 – 65	6	25	65	M6	63×6 – 65
504 003 - 02	HSK-A63×8 – 65	8	28	65	M8	63×8 – 65
504 003 - 03	HSK-A63×10 – 65	10	35	65	M10	63×10 – 65
504 003 - 04	HSK-A63×12 – 80	12	42	80	M12	63×12 – 80
504 003 - 05	HSK-A63×14 – 80	14	44	80	M12	63×14 – 80
504 003 - 06	HSK-A63×16 – 80	16	48	80	M14	63×16 – 80
504 003 - 07	HSK-A63×18 – 80	18	50	80	M14	63×18 – 80
504 003 - 08	HSK-A63×20 – 80	20	52	80	M16	63×20 – 80
504 003 - 09	HSK-A63×25 – 110	25	65	110	M18×2	63×25 – 110
504 003 - 10	HSK-A63×32 – 110	32	72	110	M20×2	63×32 – 110
506 003 - 01	HSK-A100×6 – 80	6	25	80	M6	100×6 – 80
506 003 - 02	HSK-A100×8 – 80	8	28	80	M8	100×8 – 80
506 003 - 03	HSK-A100×10 – 80	10	35	80	M10	100×10 – 80
506 003 - 04	HSK-A100×12 – 80	12	42	80	M12	100×12 – 80
506 003 - 05	HSK-A100×14 – 80	14	44	80	M12	100×14 – 80
506 003 - 06	HSK-A100×16 – 100	16	48	100	M14	100×16 – 100
506 003 - 07	HSK-A100×18 – 100	18	50	100	M14	100×18 – 100
506 003 - 08	HSK-A100×20 – 100	20	52	100	M16	100×20 – 100
506 003 - 09	HSK-A100×25 – 100	25	65	100	M18×2	100×25 – 100
506 003 - 10	HSK-A100×32 – 100	32	72	100	M20×2	100×32 – 100

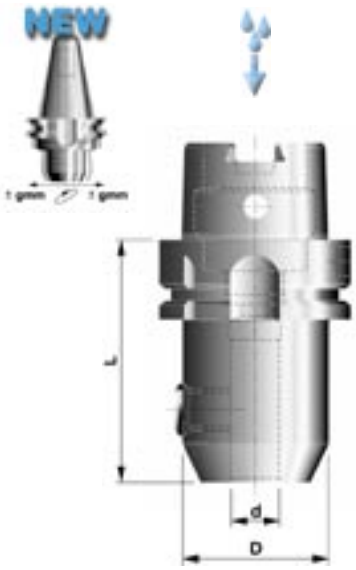

COLLET CHUCKS FOR THE COLLETS DIN 6499(ER)

Order No.	Dimension-Marking	Chucking capacity	D /mm/	L /mm/	Wrench	
504 009 - 01	HSK-A63×ER16 – 100	1÷10	28	100	591048-02	63×ER16 – 100
504 009 - 02	HSK-A63×ER16 – 160	1÷10	28	160	591048-02	63×ER16 – 160
504 009 - 03	HSK-A63×ER25 – 100	1÷16	42	100	591048-03	63×ER25 – 100
504 009 - 04	HSK-A63×ER32 – 100	2÷20	50	100	591048-04	63×ER32 – 100
504 009 - 05	HSK-A63×ER40 – 120	3÷26	63	120	591048-05	63×ER40 – 120
506 009 - 01	HSK-A100×ER16 – 100	1÷10	28	100	591048-02	100×ER16 – 100
506 009 - 02	HSK-A100×ER16 – 160	1÷10	28	160	591048-02	100×ER16 – 160
506 009 - 03	HSK-A100×ER25 – 100	1÷16	42	100	591048-03	100×ER25 – 100
506 009 - 04	HSK-A100×ER32 – 100	2÷20	50	100	591048-04	100×ER32 – 100
506 009 - 05	HSK-A100×ER40 – 120	3÷26	63	120	591048-05	100×ER40 – 120

Note:
It is possible to deliver pre-ballanced holders to G 6,3 / 8000 RPM for the special order.

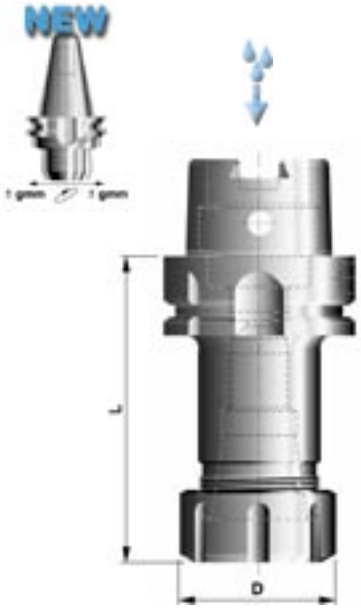

Chucks

SHORT DRILL CHUCKS

Order No.	Dimension-Marking	Chucking capacity	D /mm/	L /mm/	
504 022 - 01	HSK-A63×1 – 13	1÷13	50	110	63×1 – 13
504 022 - 02	HSK-A63×3 – 16	3÷16	57	110	63×3 – 16
506 022 - 01	HSK-A100×1 – 13	1÷13	50	110	100×1 – 13
506 022 - 02	HSK-A100×3 – 16	3÷16	57	110	100×3 – 16

Note:
Available for left and right rotation.

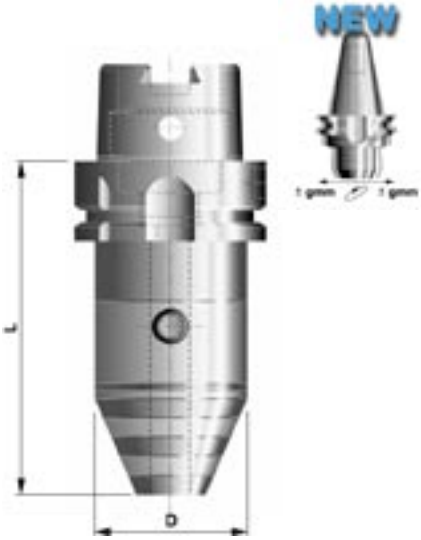

YDRAULIC-EXPANSION CHUCKS

Order No.	Dimension-Marking	d /mm/	D /mm/	D_1 /mm/	l /mm/	L /mm/	
504 024 - 01	HSK-A63×6	6	26	50	24	70	63×6
504 024 - 02	HSK-A63×8	8	28	50	24	70	63×80
504 024 - 03	HSK-A63×10	10	30	50	35	80	63×10
504 024 - 04	HSK-A63×12	12	32	50	40	85	63×12
504 024 - 05	HSK-A63×14	14	34	50	40	85	63×14
504 024 - 06	HSK-A63×16	16	38	50	46	90	63×16
504 024 - 07	HSK-A63×18	18	40	50	47	90	63×18
504 024 - 08	HSK-A63×20	20	42	50	48	90	63×20
506 024 - 01	HSK-A100×20 – 105	20	42	50	59	105	100×20 – 105

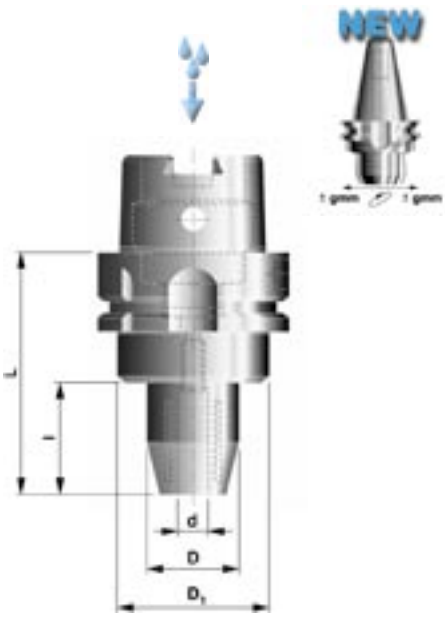

Adaptors

ADAPTORS FOR TOOLS WITH MORSE TAPER

Order No.	Dimension-Marking	Morse	D /mm/	L /mm/	
504 011 - 01	HSK-A63×1	1	25	100	63×1
504 011 - 02	HSK-A63×2	2	32	120	63×2
504 011 - 03	HSK-A63×3	3	40	140	63×3
504 011 - 04	HSK-A63×4	4	48	160	63×4
506 011 - 01	HSK-A100×1 – 110	1	25	110	100×1 – 110
506 011 - 02	HSK-A100×2 – 120	2	32	120	100×2 – 120
506 011 - 03	HSK-A100×3 – 150	3	40	150	100×3 – 150
506 011 - 04	HSK-A100×4 – 170	4	48	170	100×4 – 170
506 011- 05	HSK-A100×5 – 200	5	63	200	100×5 – 200

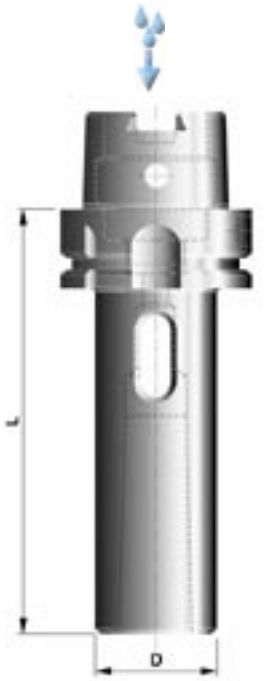

ADAPTORS FOR TOOLS WITH MORSE TAPER SHANK AND DRAWBAR THREAD

Order No.	Dimension-Marking	Morse	D /mm/	L /mm/	
504 010 - 01	HSK-A63×1	1	18 / 26	104	63×1
504 010 - 02	HSK-A63×2	2	28 / 34	114	63×2
504 010 - 03	HSK-A63×3	3	34 / 41	134	63×3
504 010 - 04	HSK-A63×4	4	42 / 50	164	63×4
506 010 - 01	HSK-A100×2 – 117	2	28 / 34	117	100×2 – 117
506 010 - 02	HSK-A100×3 – 137	3	34 / 41	137	100×3 – 137
506 010 - 03	HSK-A100×4 – 172	4	42 / 53	172	100×4 – 172
506 010 - 04	HSK-A100×5 – 202	5	55 / 69	202	100×5 – 202

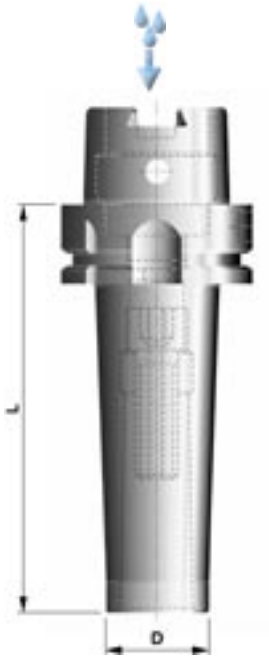

Shrink Chucks

SHRINK CHUCKS FOR HM AND HSSE TOOLS
WITH THE SHANK IN THE TOLERANCE H6

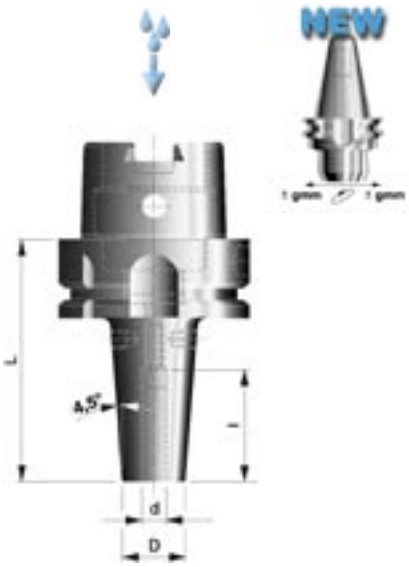

Order No.	Dimension-Marking	d /mm/	D /mm/	l /mm/	L /mm/	
504 102 - 01	HSK-A63×6 – 80	6	21	37	80	63×6 – 80
504 102 - 02	HSK-A63×6 – 120	6	21	37	120	63×6 – 120
504 102 - 03	HSK-A63×6 – 160	6	21	37	160	63×6 – 160
504 102 - 04	HSK-A63×8 – 80	8	21	37	80	63×8 – 80
504 102 - 05	HSK-A63×8 – 120	8	21	37	120	63×8 – 120
504 102 - 06	HSK-A63×8 – 160	8	21	37	160	63×8 – 160
504 102 - 07	HSK-A63×10 – 85	10	24	42	85	63×10 – 85
504 102 - 08	HSK-A63×10 – 120	10	24	42	120	63×10 – 120
504 102 - 09	HSK-A63×10 – 160	10	24	42	160	63×10 – 160
504 102 - 10	HSK-A63×12 – 90	12	24	47	90	63×12 – 90
504 102 - 11	HSK-A63×12 – 120	12	24	47	120	63×12 – 120
504 102 - 12	HSK-A63×12 – 160	12	24	47	160	63×12 – 160
504 102 - 13	HSK-A63×14 – 90	14	27	47	90	63×14 – 90
504 102 - 14	HSK-A63×14 – 120	14	27	47	120	63×14 – 120
504 102 - 15	HSK-A63×14 – 160	14	27	47	160	63×14 – 160
504 102 - 16	HSK-A63×16 – 95	16	27	50	95	63×16 – 95
504 102 - 17	HSK-A63×16 – 120	16	27	50	120	63×16 – 120
504 102 - 18	HSK-A63×16 – 160	16	27	50	160	63×16 – 160
504 102 - 19	HSK-A63×18 – 95	18	33	50	95	63×18 – 95
504 102 - 20	HSK-A63×18 – 120	18	33	50	120	63×18 – 120
504 102 - 21	HSK-A63×18 – 160	18	33	50	160	63×18 – 160
504 102 - 22	HSK-A63×20 – 100	20	33	52	100	63×20 – 100
504 102 - 23	HSK-A63×20 – 120	20	33	52	120	63×20 – 120
504 102 - 24	HSK-A63×20 – 160	20	33	52	160	63×20 – 160
504 102 - 25	HSK-A63×25 – 115	25	44	58	115	63×25 – 115
504 102 - 26	HSK-A63×25 – 160	25	44	58	160	63×25 – 130
504 102 - 27	HSK-A63×32 – 120	32	44	62	120	63×32 – 120
504 102 - 28	HSK-A63×32 – 160	32	44	62	160	63×32 – 160
506 102 - 01	HSK-A100×6 – 85	6	21	37	85	100×6 – 85
506 102 - 02	HSK-A100×6 – 160	6	21	37	160	100×6 – 190
506 102 - 03	HSK-A100×8 – 85	8	21	37	85	100×8 – 85
506 102 - 04	HSK-A100×8 – 160	8	21	37	160	100×8 – 160
506 102 - 05	HSK-A100×10 – 90	10	24	42	90	100×10 – 90
506 102 - 06	HSK-A100×10 – 160	10	24	42	160	100×10 – 160
506 102 - 07	HSK-A100×12 – 95	12	24	47	95	100×12 – 95
506 102 - 08	HSK-A100×12 – 160	12	24	47	160	100×12 – 160
506 102 - 09	HSK-A100×14 – 95	14	27	47	95	100×14 – 95
506 102 - 10	HSK-A100×14 – 160	14	27	47	160	100×14 – 190
506 102 - 11	HSK-A100×16 – 100	16	27	50	100	100×16 – 100
506 102 - 12	HSK-A100×16 – 160	16	27	50	160	100×16 – 160
506 102 - 13	HSK-A100×18 – 100	18	33	50	100	100×18 – 100
506 102 - 14	HSK-A100×18 – 160	18	33	50	160	100×18 – 160
506 102 - 15	HSK-A100×20 – 105	20	33	52	105	100×20 – 105
506 102 - 16	HSK-A100×20 – 160	20	33	52	160	100×20 – 160
506 102 - 17	HSK-A100×25 – 115	25	44	58	115	100×25 – 115
506 102 - 18	HSK-A100×25 – 160	25	44	58	160	100×25 – 160
506 102 - 19	HSK-A100×32 – 120	32	44	62	120	100×32 – 120
506 102 - 20	HSK-A100×32 – 160	32	44	62	160	100×32 – 160

Screw Fit Adaptors

Order No.	Dimension-Marking	d /mm/	D/D_1 /mm/	l /mm/	L /mm/	
504 001 - 01	HSK-A63×M8 – 25	8,5	13/14,5	25	59	63×M8 – 25
504 001 - 02	HSK-A63×M8 – 50	8,5	13/20	50	84	63×M8 – 50
504 001 - 03	HSK-A63×M8 – 75	8,5	13/23	75	109	63×M8 – 75
504 001 - 04	HSK-A63×M8 – 100	8,5	13/25	100	134	63×M8 – 100
504 001 - 05	HSK-A63×M8 – 150	8,5	13/25	150	184	63×M8 – 150
504 001 - 06	HSK-A63×M10 – 25	10,5	18/19,5	25	59	63×M10 – 25
504 001 - 07	HSK-A63×M10 – 50	10,5	18/24	50	84	63×M10 – 50
504 001 - 08	HSK-A63×M10 – 75	10,5	18/28	75	109	63×M10 – 75
504 001 - 09	HSK-A63×M10 – 100	10,5	18/32	100	134	63×M10 – 100
504 001 - 10	HSK-A63×M10 – 150	10,5	18/32	150	184	63×M10 – 150
504 001 - 11	HSK-A63×M12 – 25	12,5	21/23,5	25	59	63×M12 – 25
504 001 - 12	HSK-A63×M12 – 50	12,5	21/24	50	84	63×M12 – 50
504 001 - 13	HSK-A63×M12 – 75	12,5	21/31	75	109	63×M12 – 75
504 001 - 14	HSK-A63×M12 – 100	12,5	21/36	100	134	63×M12 – 100
504 001 - 15	HSK-A63×M12 – 150	12,5	21/36	150	184	63×M12 – 150
504 001 - 16	HSK-A63×M16 – 25	17	29/29,5	25	59	63×M16 – 25
504 001 - 17	HSK-A63×M16 – 50	17	29/34	50	84	63×M16 – 50
504 001 - 18	HSK-A63×M16 – 75	17	29/37	75	109	63×M16 – 75
504 001 - 19	HSK-A63×M16 – 100	17	29/41	100	134	63×M16 – 100
504 001 - 20	HSK-A63×M16 – 150	17	29/41	150	184	63×M16 – 150
506 001 - 01	HSK-A100×M10 – 25	10,5	18/20	25	57	100×M10 – 25
506 001 - 02	HSK-A100×M10 – 50	10,5	18/25	50	87	100×M10 – 50
506 001 - 03	HSK-A100×M10 – 75	10,5	18/28	75	112	100×M10 – 75
506 001 - 04	HSK-A100×M10 – 100	10,5	18/30	100	137	100×M10 – 100
506 001 - 05	HSK-A100×M12 – 20	12,5	21/23,5	20	57	100×M12 – 20
506 001 - 06	HSK-A100×M12 – 50	12,5	21/23,5	50	87	100×M12 – 50
506 001 - 07	HSK-A100×M12 – 100	12,5	21/33,5	100	137	100×M12 – 100
506 001 - 08	HSK-A100×M12 – 150	12,5	21/47	150	187	100×M12 – 150
506 001 - 09	HSK-A100×M12 – 200	12,5	21/55	200	237	100×M12 – 200
506 001 - 10	HSK-A100×M16 – 20	17	29/31,5	20	57	100×M16 – 20
506 001 - 11	HSK-A100×M16 – 50	17	29/31,5	50	87	100×M16 – 50
506 001 - 12	HSK-A100×M16 – 100	17	29/41,5	100	137	100×M16 – 100
506 001 - 13	HSK-A100×M16 – 150	17	29/55	150	187	100×M16 – 150
506 001 - 14	HSK-A100×M16 – 200	17	29/55	200	237	100×M16 – 200

SCREW FIT ADAPTORS (DIAMETER)

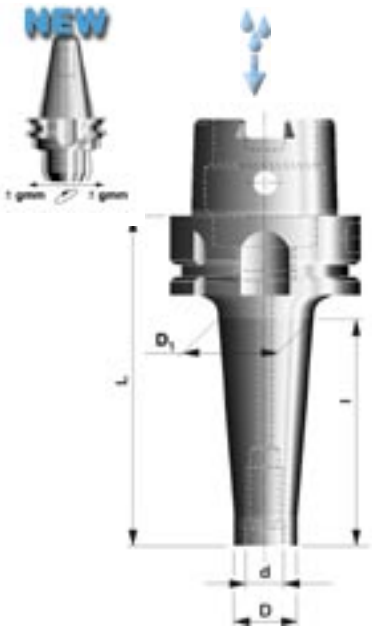

Milling Arbors

COMBINATION SHELL MILL ADAPTORS
FOR CUTTERS WITH KEYWAY OR DRIVING SLOT

Order No.	Dimension-Marking	d h6 /mm/	D /mm/	l /mm/	L /mm/		T	
504 015 - 01	HSK-A63×16	16	32	27	60	16	M8	63×16
504 015 - 02	HSK-A63×22	22	40	31	60	22	M10	63×22
504 015 - 03	HSK-A63×27	27	48	33	60	27	M12	63×27
504 015 - 04	HSK-A63×32	32	58	38	60	32	M16	63×32
504 015 - 05	HSK-A63×40	40	70	41	70	40	M20	63×40
506 015 - 01	HSK-A100×16 – 60	16	32	27	60	16	M8	100×16 – 60
506 015 - 02	HSK-A100×22 – 60	22	40	31	60	22	M10	100×22 – 60
506 015 - 03	HSK-A100×27 – 60	27	48	33	60	27	M12	100×27 – 60
506 015 - 04	HSK-A100×32 – 60	32	58	38	60	32	M16	100×32 – 60
506 015 - 05	HSK-A100×40 – 70	40	70	41	70	40	M20	100×40 – 70
506 015 - 06	HSK-A100×50 – 80	50	90	46	80	50	M24	100×50 – 80
506 015 - 07	HSK-A100×60 – 80	60	110	66	80	60	M30	100×60 – 80

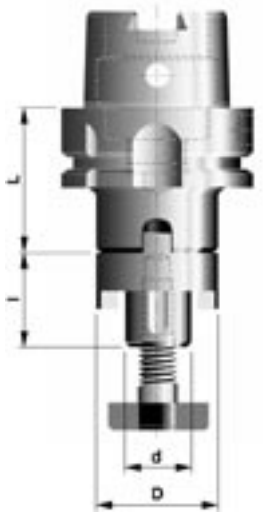

MILLING ARBORS FOR CUTTERS
WITH DRIVING SLOT

Order No.	Dimension-Marking	d h6 /mm/	D /mm/	l /mm/	L /mm/	T	
504 017 - 01	HSK-A63×22 – 50	22	48	19	50	M10	63×22 – 50
504 017 - 02	HSK-A63×22 – 100	22	48	19	100	M10	63×22 – 100
504 017 - 03	HSK-A63×27 – 60	27	60	21	60	M12	63×27 – 60
504 017 - 04	HSK-A63×27 – 100	27	60	21	100	M12	63×27 – 100
504 017 - 05	HSK-A63×32 – 60	32	78	24	60	M16	63×32 – 60
504 017 - 06	HSK-A63×32 – 100	32	78	24	100	M16	63×32 – 100
504 017 - 07*	HSK-A63×40 – 60	40	89	27	60	M20	63×40 – 60
504 017 - 08*	HSK-A63×40 – 100	40	89	27	100	M20	63×40 – 100
506 017 - 01	HSK-A100×22 – 50	22	48	19	50	M10	100×22 – 50
506 017 - 03	HSK-A100×27 – 50	27	60	21	50	M12	100×27 – 50
506 017 - 05	HSK-A100×32 – 50	32	78	24	50	M16	100×32 – 50
506 017 - 07*	HSK-A100×40 – 60	40	89	27	60	M20	100×40 – 60
506 017 - 09	HSK-A100×50 – 70	50	120	30	70	M24	100×50 – 70
506 017 - 10	HSK-A100×60 – 75	60	128	40	75	M30	100×60 – 75

***** These dimensions have four thread-holes M12 for the clamping of milling head besides.

Milling Arbors, Control Bars

MILLING ARBORS FOR CUTTERS WITH DRIVING SLOT AND CENTRE THROUGH COOLANT

Order No.	Dimension-Marking	d h6 /mm/	D /mm/	l /mm/	L /mm/		
504 017 - 11	HSK-A63×16	16	38	17	50	M8×25	63×16
504 017 - 12	HSK-A63×22	22	48	19	50	M10×25	63×22
504 017 - 13	HSK-A63×27	27	60	21	60	M12×35	63×27
504 017 - 14	HSK-A63×32	32	78	24	60	M16×35	63×32
504 017 - 15*	HSK-A63×40	40	89	27	60	M20×40	63×40
506 017 - 12	HSK-A100×22	22	48	19	50	M10×25	100×22
506 017 - 13	HSK-A100×27	27	60	21	50	M12×35	100×27
506 017 - 14	HSK-A100×32	32	78	24	50	M16×35	100×32
506 017 - 15*	HSK-A100×40	40	89	27	60	M20×40	100×40

***** These dimensions have four thread-holes M12 for the clamping of milling head besides.

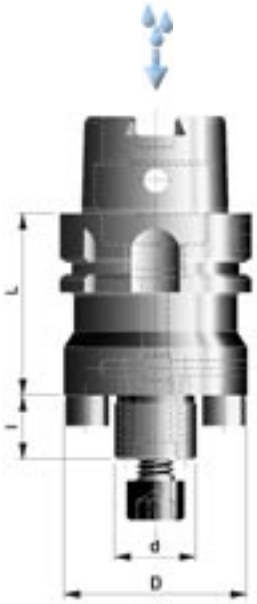

CONTROL BARS

Order No.	Dimension-Marking	$d^{\pm 0,003}$ /mm/	l /mm/	L /mm/	Max. run-out	
504 026 - 01	HSK-A63	40	320	346	0,003	63
506 026 - 01	HSK-A100	40	320	349	0,003	100

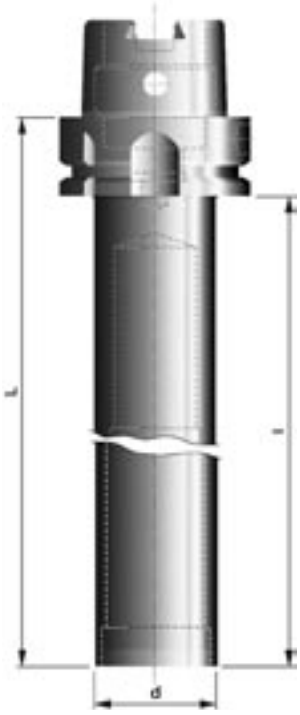

Boring bars

BORING BARS FOR ROUGHING

Order No.	Dimension-Marking	D /mm/	L /mm/	d_{min}-d_{max} /mm/	Cutter unit	
504 130 - 01	HSK-A63×25 – 140	25	140	30÷39	25	63×25 – 25
504 130 - 02	HSK-A63×32 – 140	32	140	38÷50	32	63×32 – 32
504 130 - 03	HSK-A63×32 – 180	32	180	38÷50	32	63×32 – 32
504 130 - 04	HSK-A63×40 – 180	40	180	48÷63	40	63×40 – 40
504 130 - 05	HSK-A63×40 – 220	40	220	48÷63	40	63×40 – 40
504 130 - 06	HSK-A63×50 – 220	50	220	60÷80	50	63×50 – 50
504 130 - 07	HSK-A63×50 – 280	50	280	60÷80	50	63×50 – 50
504 130 - 08	HSK-A63×63 – 200	63	200	76÷110	63	63×63 – 63

Boring bars are delivered with fitted cutter units PN 24 2429 (without exchangeable insert).

BORING BARS FOR FINISHING

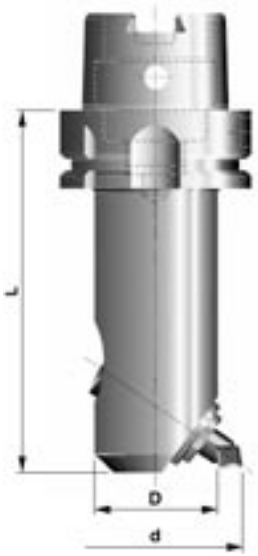

Order No.	Dimension-Marking	D /mm/	L /mm/	d_{min}-d_{max} /mm/	Cutter unit	
504 030 - 01	HSK-A63×19 – 90	19	90	20÷32	6 - 17, 6 - 21	63×19 – 90
504 030 - 02	HSK-A63×25 – 125	25	125	31÷44	8 - 28	63×25 – 125
504 030 - 03	HSK-A63×32 – 125	32	125	43÷58	10 - 38	63×32 – 125
504 030 - 04	HSK-A63×32 – 160	32	160	43÷58	10 - 38	63×32 – 160
504 030 - 05	HSK-A63×40 – 160	40	160	56÷72	16 - 49	63×40 – 160
504 030 - 06	HSK-A63×40 – 200	40	200	56÷72	16 - 49	63×40 – 200
504 030 - 07	HSK-A63×50 – 160	50	160	66÷90	16 - 60	63×50 – 160
504 030 - 08	HSK-A63×50 – 200	50	200	66÷90	16 - 60	63×50 – 200
504 030 - 09	HSK-A63×50 – 250	50	250	66÷90	16 - 60	63×50 – 250
504 030 - 10	HSK-A63×63 – 160	63	160	88÷120	24 - 78	63×63 – 160
504 030 - 11	HSK-A63×63 – 200	63	200	88÷120	24 - 78	63×63 – 200

Boring bars ∅19, ∅25 are delivered with fitted cutter units PN 242428, ∅32, ∅40, ∅50, ∅68, ∅80 are delivered with fitted cutter units PN 242421 (without exchangeable insert).

Semi-products, Taper Wipes

SEMI-PRODUCTS OF BORING BARS

Order No.	Dimension-Marking	D /mm/	L /mm/	
504 025 - 01	HSK-A63×63,5	63,5	160	63×63,5
506 025 - 01	HSK-A100×95	95,5	250	100×95

TAPER WIPES

Order No.	Dimension-Marking	
504 000 - 01	HSK-A 63	63
506 000 - 01	HSK-A 100	100

Quick clamping heads

WRENCHES FOR THE CLAMPING NUTS ER

Order No.	Dimension-Marking	Version	
591 048 - 02	ER 16	A	ER 16
591 048 - 03	ER 25	B	ER 25
591 048 - 04	ER 32	B	ER 32
591 048 - 05	ER 40	B	ER 40

Note:
Wrenches are not included by the delivery of the collet chucks. It is necessary to order it separately.

BALANCING - PRODUCERS RECOMMENDATION

The clamping tools and boring bars with the taper HSK-A are delivered as design-prebalanced, that means the imbalance value due to design workmanship of the clamping shank is minimized on the **value 20 gmm/kg of the mass**.

The recommended revolutions:

	HSK63	HSK100
- pre-balanced holders	**max. 10000 RPM**	**max. 7000 RPM**

The holders used over this value of RPM are recommended to be balanced.
The holders are balanced with the reduction of imbalance by the radial-boring into the bottom of the grip slot.

The recommended values of balancing:

HSK63	**G6,3/20000 RPM**
HSK100	**G6.3/16000 RPM**

The higher quality of balancing (limited by the residual imbalance 1,5 gmm) or the balancing of another holder should be agreed in advance.
The part of the delivery is a "Protocol of balancing", which includes the maximal tolerable residual imbalance for the required quality of balancing and the really reached value of the residual imbalance.

TOOL SHANKS WITH HSK-A
TAPER FOR AUTOMATIC TOOL EXCHANGE

HSK-Form A	D_1	D_2	D_4	D_{10}	D_{11}
HSK-A63	63	48	53	37	M 18×1
HSK-A100	100	75	85	58	M 24×1,5

HSK-Form A	F_1	F_2	F_3	L_1	L_6
HSK-A63	26	42	18	32	18,13
HSK-A100	29	45	20	50	28,56

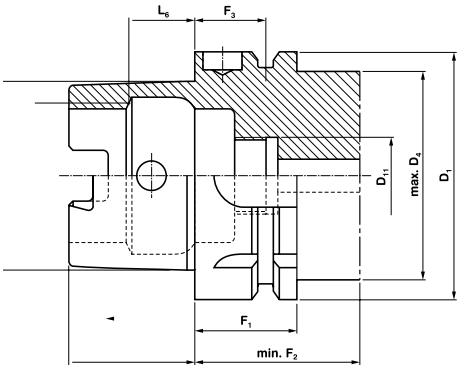

Material:
Case hardened steel, tensile strength in core min. 980 N/mm^2

Execution:
Case hardened HR_c 58±2, depth of case min. 0,3÷0,6 mm

Holders, Collet chucks

END MILL HOLDERS FOR CLAMPING CUTTERS
WITH CYLINDRICAL SHANK AND WELDON FLAT DIN 1835-B

Order No.	Dimension-Marking	d H4 /mm/	D /mm/	L /mm/		
513 003 - 01	40×6 – 50	6	25	50	M 6	40×6 – 50
513 003 - 02	40×8 – 50	8	28	50	M 8	40×8 – 50
513 003 - 03	40×10 – 63	10	35	63	M 10	40×10 – 63
513 003 - 04	40×12 – 63	12	42	63	M 12	40×12 – 63
513 003 - 05	40×14 – 63	14	44	63	M 12	40×14 – 63
513 003 - 06	40×16 – 63	16	48	63	M 14	40×16 – 63
513 003 - 07	40×18 – 63	18	50	63	M 14	40×18 – 63
513 003 - 08	40×20 – 63	20	52	63	M 16	40×20 – 63
513 003 - 09	40×25 – 90	25	65	90	M 18×2	40×25 – 90
513 003 - 10	40×32 – 100	32	72	100	M 20×2	40×32 – 100
527 003 - 01	50×6 – 63	6	25	63	M 6	50×6 – 63
527 003 - 02	50×8 – 63	8	28	63	M 8	50×8 – 63
527 003 - 03	50×10 – 63	10	35	63	M 10	50×10 – 63
527 003 - 04	50×12 – 80	12	42	80	M 12	50×12 – 80
527 003 - 05	50×14 – 80	14	44	80	M 12	50×14 – 80
527 003 - 06	50×16 – 80	16	48	80	M 14	50×16 – 80
527 003 - 07	50×18 – 80	18	50	80	M 14	50×18 – 80
527 003 - 08	50×20 – 80	20	52	80	M 16	50×20 – 80
527 003 - 09	50×25 – 100	25	65	100	M 18×2	50×25 – 100
527 003 - 10	50×32 – 105	32	72	105	M 20×2	50×32 – 105
527 003 - 11	50×40 – 115	40	80	115	M 20×2	50×40 – 115

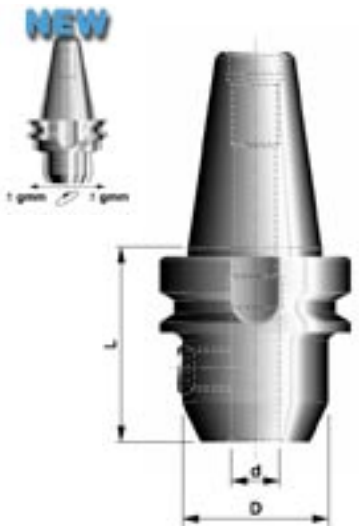

COLLET CHUCKS
FOR THE COLLETS DIN 6499 (ER)

Order No.	Dimension-Marking	Chucking capacity	D /mm/	L /mm/	Wrench	
513 009 - 01	40×ER16	1÷10	28	63	591048 - 02	40×ER16
513 009 - 03	40×ER25	1÷16	42	60	591048 - 03	40×ER25
513 009 - 04	40×ER32	2÷20	50	70	591048 - 04	40×ER32
513 009 - 05	40×ER40	3÷26	63	80	591048 - 05	40×ER40
527 009 - 01	50×ER25	1÷16	42	100	591048 - 03	50×ER25
527 009 - 02	50×ER32	2÷20	50	100	591048 - 04	50×ER32
527 009 - 03	50×ER40	3÷26	63	100	591048 - 05	50×ER40

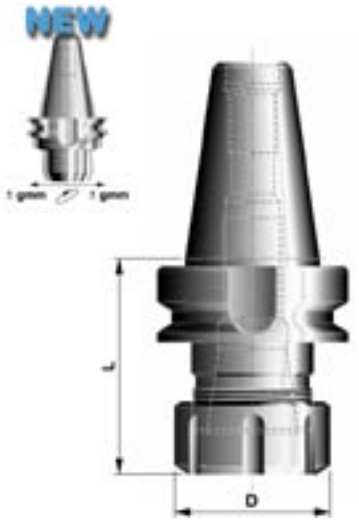

Hydralic-Expansion Chucks

HYDRAULIC-EXPANSION CHUCKS

Order No.	Dimension-Marking	d /mm/	D /mm/	D_1 /mm/	l /mm/	l_1 /mm/	L /mm/	
513 024 - 08	40×20	20	42	50	50	45÷55	102	40×20
527 024 - 08	50×20	20	42	50	50	45÷55	113	50×20

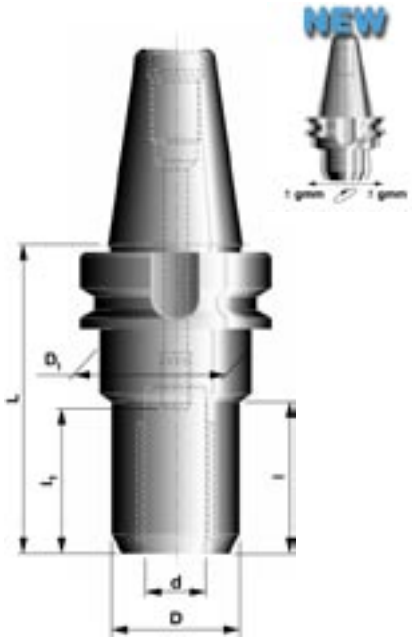

ADAPTORS

Order No.	Dimension-Marking	d /mm/	D /mm/	L /mm/	
507 224 - 01	20×6	6	20	54	20×6
507 224 - 02	20×8	8	20	54	20×8
507 224 - 03	20×10	10	20	54	20×10
507 224 - 04	20×12	12	20	54	20×12
507 224 - 05	20×14	14	20	54	20×14
507 224 - 06	20×16	16	20	54	20×16

Adaptors

ADAPTORS FOR TOOLS WITH MORSE TAPER

Order No.	Dimension-Marking	Morse	D /mm/	L /mm/	
513 011 - 01	40×1	1	25	50	40×1
513 011 - 02	40×2	2	32	50	40×2
513 011 - 03	40×3	3	40	70	40×3
513 011 - 04	40×4	4	48	95	40×4
527 011 - 01	50×1	1	25	45	50×1
527 011 - 02	50×2	2	32	60	50×2
527 011 - 03	50×3	3	40	65	50×3
527 011 - 04	50×4	4	48	95	50×4
527 011 - 05	50×5	5	63	105	50×5

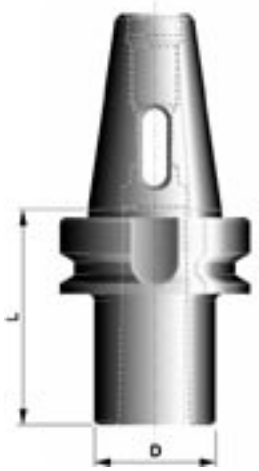

ADAPTORS FOR TOOLS
WITH MORSE TAPER SHANK AND DRAWBAR THREAD

Order No.	Dimension-Marking	Morse	D /mm/	L /mm/	
513 010 - 01	40×1	1	25	50	40×1
513 010 - 02	40×2	2	32	50	40×2
513 010 - 03	40×3	3	40	70	40×3
513 010 - 04	40×4	4	48	95	40×4
527 010 - 01	50×1	1	25	45	50×1
527 010 - 02	50×2	2	32	60	50×2
527 010 - 03	50×3	3	40	65	50×3
527 010 - 04	50×4	4	48	70	50×4
527 010 - 05	50×5	5	63	100	50×5

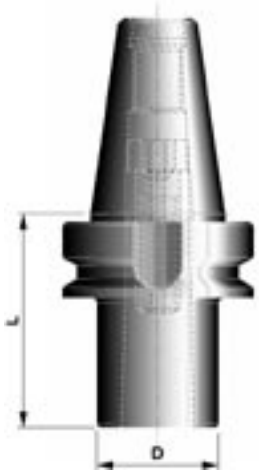

Adaptors

ADAPTORS

Order No.	Dimension-Marking	D /mm/	L /mm/	Workmanship	
527 007 - 01	50×40	75	70	A	50×40
527 007 - 02	50×40	75	70	B	50×40

A - short clamp-screw for tools DIN 2080 and ČSN 22 0432

B - long clamp-screw for tools DIN 69871 and MAS BT

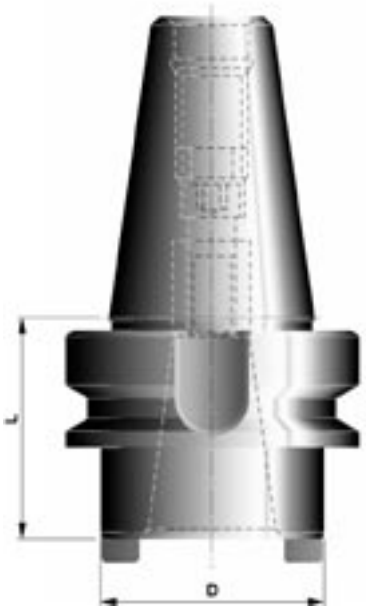

COMBINATION SHELL MILLING ARBORS FOR CUTTERS WITH LONGITUDINAL KEYWAY OR DIAGONAL DRIVING GROOVE

Order No.	Dimension-Marking	d h6 /mm/	d_1 /mm/	l /mm/	l_1 /mm/			
513 015 - 01	40×16	16	32	27	55	16	M 8	40×16
513 015 - 02	40×22	22	40	31	55	22	M 10	40×22
513 015 - 03	40×27	27	48	33	55	27	M 12	40×27
513 015 - 04	40×32	32	58	38	60	32	M 16	40×32
513 015 - 05	40×40	40	70	41	60	40	M 20	40×40
527 015 - 01	50×16	16	32	27	70	16	M 8	50×16
527 015 - 02	50×22	22	40	31	70	22	M 10	50×22
527 015 - 03	50×27	27	48	33	70	27	M 12	50×27
527 015 - 04	50×32	32	58	38	70	32	M 16	50×32
527 015 - 05	50×40	40	70	41	70	40	M 20	50×40
527 015 - 06	50×50	50	90	46	70	50	M 24	50×50

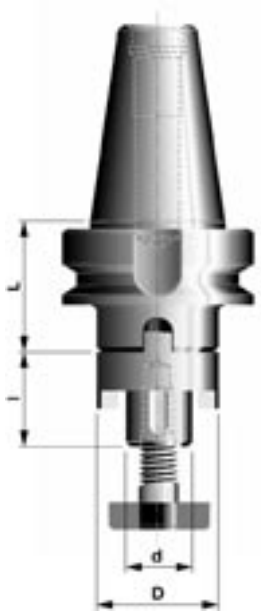

Milling arbors, Adaptors

MILLING ARBORS FOR CUTTERS WITH DRIVING SLOT

Order No.	Dimension-Marking	d h6 /mm/	D /mm/	l /mm/	L /mm/	T	
513 017 - 01	40×22	22	48	19	35	M 10	40×22
513 017 - 02	40×27	27	50	21	35	M 12	40×27
513 017 - 03	40×32	32	78	24	50	M 16	40×32
513 017 - 04	40×40	40	89	27	50	M 20	40×40
527 017 - 01	50×22	22	48	19	40	M 10	50×22
527 017 - 02	50×27	27	60	21	40	M 12	50×27
527 017 - 03	50×32	32	78	24	40	M 16	50×32
527 017 - 04	50×40	40	89	27	40	M 20	50×40

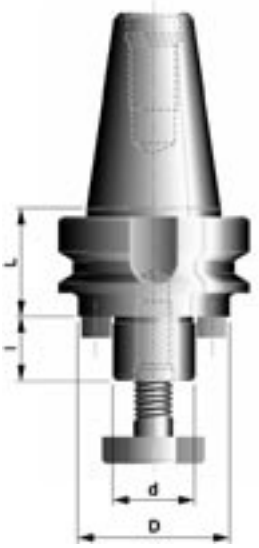

MILLING ARBORS FOR MILLING CUTTERS

Order No.	Dimension-Marking	d h6 /mm/	D /mm/	l /mm/	L /mm/	d_1 /mm/	M	T	
513 027 - 01	40×40	40	88	30	60	66,7	M 12	M 20	40×40
527 027 - 01	50×40	40	88	30	70	66,7	M 12	M 20	50×40
527 027 - 02	50×60	60	128	40	80	101,6	M 16	M 30	50×60

POHLED A-A

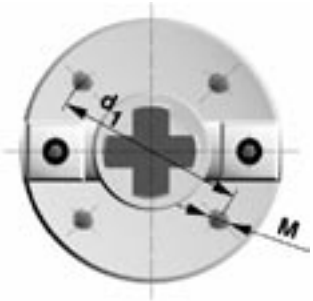

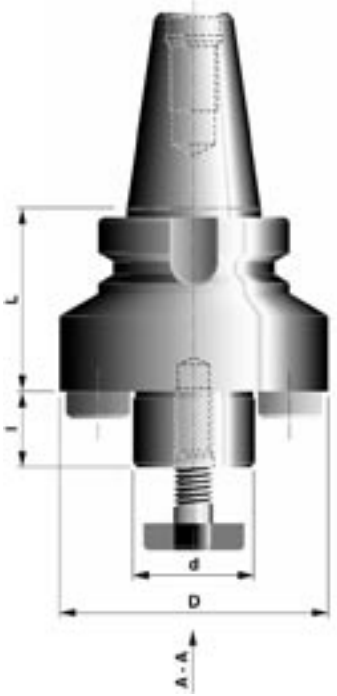

Holders

ARBORS FOR DRILL CHUCKS

Order No.	Dimension-Marking	L /mm/	
513 020 - 01	40×B16	37	40×B16
513 020 - 02	40×B18	37	40×B18

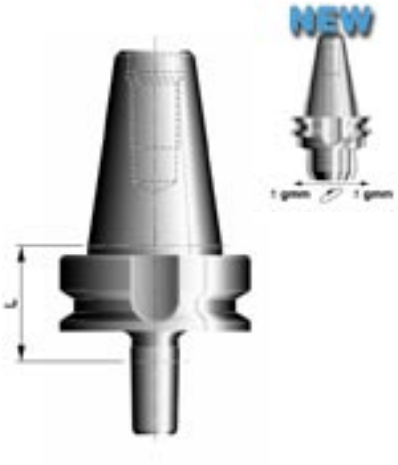

SHORT DRILL CHUCKS

Order No.	Dimension-Marking	Chucking capacity	D /mm/	L /mm/	
513 022 - 01	40×1 – 13	1÷13	50	98	40×1 – 13
513 022 - 02	40×3 – 16	3÷16	57	98	40×3 – 16
527 022 - 01	50×1 – 13	1÷13	50	110	50×1 – 13
527 022 - 02	50×3 – 16	3÷16	57	110	50×3 – 16

Note: Available for left and right rotation.

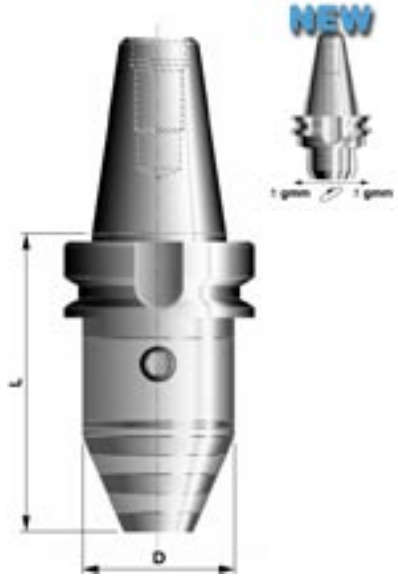

Quick change tapping chuck

Order No.	Dimension	Chucking capacity	D /mm/	D1 /mm/	L /mm/	+/- /mm/		
513 033 - 01	40×1	M 3×M 12	19	36	67	7,5/7,5	1	40×1
513 033 - 02	40×2	M 8×M 20	31	53	94	12,5/12,5	2	40×2
513 033 - 03	40×3	M 14×M 33	48	78	163	20/20	3	40×3
527 033 - 01	50×2	M 8×M 20	31	53	102	12,5/12,5	2	50×2
527 033 - 02	50×3	M 14×M 33	48	78	141	20/20	3	50×3

QUICK CHANGE TAPPING CHUCKS WITH
LENGHT COMPENSATION FOR TENSION AND COMPRESSION

1

Order No.			
599 133-01	**M 3**	DIN 371	M 3
599 133-02	**M 3,5**	DIN 371	M 3,5
599 133-03	**M 4**	DIN 371	M 4
599 133-04	**M 5**	DIN 371	M 5
599 133-05	**M 6**	DIN 371	M 6
599 133-06	**M 8**	DIN 371	M 7
599 133-08	**M 10**	DIN 371	M 10
599 133-21	**M 4**	DIN 376	M 4
599 133-22	**M 5**	DIN 376	M 5
599 133-23	**M 6**	DIN 376	M 6
599 133-24	**M 8**	DIN 376	M 8
599 133-26	**M 10**	DIN 376	M 10
599 133-28	**M 12**	DIN 376	M 12

2

Order No.			
599 133-07	**M 8**	DIN 371	M 8
599 133-09	**M 10**	DIN 371	M 10
599 133-25	**M 8**	DIN 376	M 8
599 133-27	**M 10**	DIN 376	M 10
599 133-29	**M 12**	DIN 376	M 12
599 133-30	**M 14**	DIN 376	M 14
599 133-32	**M 16**	DIN 376	M 16
599 133-34	**M 18**	DIN 376	M 18
599 133-36	**M 20**	DIN 376	M 20

QUICK CHANGE INSERTS
WITH SLIPPING CLUTCH

3

Order No.			
599 133-31	**M 14**	DIN 376	M 14
599 133-33	**M 16**	DIN 376	M 16
599 133-35	**M 18**	DIN 376	M 18
599 133-37	**M 20**	DIN 376	M 20
599 133-38	**M 22**	DIN 376	M 22
599 133-39	**M 24**	DIN 376	M 24
599 133-40	**M 27**	DIN 376	M 27
599 133-41	**M 30**	DIN 376	M 30
599 133-42	**M 33**	DIN 376	M 33

Dimension-Marking	Chucking capacity	D mm	D_1 mm	L mm
1	M 3÷M 12	19	32	25
2	M 8÷M 20	31	50	34
3	M 14÷M 33	48	72	45

Boring Bars for Roughing

BORING BARS FOR ROUGHING

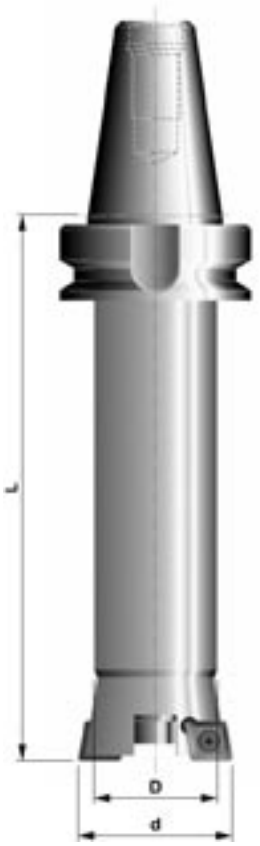

Order No.	Dimension-Marking	D /mm/	L /mm/	d_{min}-d_{max} /mm/	Cutter unit	
513 130 - 01	40×25 – 140	25	140	30÷39	25	40×25 – 140
513 130 - 02	40×32 – 140	32	140	38÷50	32	40×32 – 140
513 130 - 03	40×32 – 180	32	180	38÷50	32	40×32 – 180
513 130 - 04	40×40 – 180	40	180	48÷63	40	40×40 – 180
513 130 - 05	40×40 – 220	40	220	48÷63	40	40×40 – 220
513 130 - 06	40×50 – 180	50	180	60÷80	45	40×50 – 180
513 130 - 07	40×50 – 220	50	220	60÷80	45	40×50 – 220
513 130 - 08	40×50 – 280	50	280	60÷80	45	40×50 – 280
513 130 - 09	40×63 – 180	63	180	76÷110	63	40×63 – 180
513 130 - 10	40×63 – 220	63	220	76÷110	63	40×63 – 220
513 130 - 11	40×63 – 280	63	280	76÷110	63	40×63 – 280
527 130 - 01	50×25 – 140	25	140	30÷39	25	50×25 – 140
527 130 - 02	50×32 – 140	32	140	38÷50	32	50×32 – 140
527 130 - 03	50×32 – 180	32	180	38÷50	32	50×32 – 180
527 130 - 04	50×40 – 180	40	180	48÷63	40	50×40 – 180
527 130 - 05	50×40 – 220	40	220	48÷63	40	50×40 – 220
527 130 - 06	50×50 – 180	50	180	60÷80	45	50×50 – 180
527 130 - 07	50×50 – 240	50	240	60÷80	45	50×50 – 240
527 130 - 08	50×50 – 340	50	340	60÷80	45	50×50 – 340
527 130 - 09	50×63 – 180	63	180	76÷110	63	50×63 – 180
527 130 - 10	50×63 – 240	63	240	76÷110	63	50×63 – 240
527 130 - 11	50×63 – 340	63	340	76÷110	63	50×63 – 340
527 130 - 12	50×80 – 190	80	190	105÷160	80	50×80 – 190
527 130 - 13	50×80 – 250	80	250	105÷160	80	50×80 – 250
527 130 - 14	50×80 – 340	80	340	105÷160	80	50×80 – 340

Boring bars are delivered with fitted cutter units PN 24 2429 (without exchangeable insert).

Note: We are able to deliver the boring bars for roughing till the length L=280 mm with the adaptation for the coolant through in case of the special order.

Boring Bars for Finishing

Order No.	Dimension-Marking	D /mm/	L /mm/	d_{min}-d_{max} /mm/	Cutter unit	
513 030 - 01	40×19 – 90	19	90	20÷32	6 - 17, 6 - 21	40×19 – 90
513 030 - 02	40×25 – 125	25	125	31÷44	8 - 28	40×25 – 125
513 030 - 03	40×32 – 125	32	125	43÷58	10 - 38	40×32 – 125
513 030 - 04	40×32 – 160	32	160	43÷58	10 - 38	40×32 – 160
513 030 - 05	40×40 – 160	40	160	56÷72	16 - 49	40×40 – 160
513 030 - 06	40×40 – 200	40	200	56÷72	16 - 49	40×40 – 200
513 030 - 07	40×50 – 160	50	160	66÷90	16 - 60	40×50 – 160
513 030 - 08	40×50 – 200	50	200	66÷90	16 - 60	40×50 – 200
513 030 - 09	40×50 – 250	50	250	66÷90	16 - 60	40×50 – 250
513 030 - 10	40×63 – 160	63	160	88÷120	24 - 78	40×63 – 160
513 030 - 11	40×63 – 200	63	200	88÷120	24 - 78	40×63 – 200
513 030 - 12	40×63 – 250	63	250	88÷120	24 - 78	40×63 – 250
527 030 - 01	50×19 – 90	19	90	20÷32	6 - 17, 6 - 21	50×19 – 90
527 030 - 02	50×25 – 125	25	125	31÷44	8 - 28	50×25 – 125
527 030 - 03	50×32 – 125	32	125	43÷58	10 - 38	50×32 – 125
527 030 - 04	50×32 – 160	32	160	43÷58	10 - 38	50×32 – 160
527 030 - 05	50×40 – 160	40	160	56÷72	16 - 49	50×40 – 160
527 030 - 06	50×40 – 200	40	200	56÷72	16 - 49	50×40 – 200
527 030 - 07	50×50 – 160	50	160	66÷90	16 - 60	50×50 – 160
527 030 - 08	50×50 – 220	50	220	66÷90	16 - 60	50×50 – 220
527 030 - 09	50×50 – 315	50	315	66÷90	16 - 60	50×50 – 315
527 030 - 10	50×63 – 160	63	160	88÷120	24 - 78	50×63 – 160
527 030 - 11	50×63 – 220	63	220	88÷120	24 - 78	50×63 – 220
527 030 - 12	50×63 – 315	63	315	88÷120	24 - 78	50×63 – 315
527 030 - 13	50×80 – 160	80	160	110÷160	24 - 104	50×80 – 160
527 030 - 14	50×80 – 220	80	220	110÷160	24 - 104	50×80 – 220
527 030 - 15	50×80 – 315	80	315	110÷160	24 - 104	50×80 – 315

Boring bars ∅19, ∅25 are delivered with fitted cutter units PN 24 2428, ∅32, ∅40, ∅50, ∅63, ∅80 are delivered with fitted cutter units PN 24 2421 (without exchangeable insert).

Cutter units – page 18.

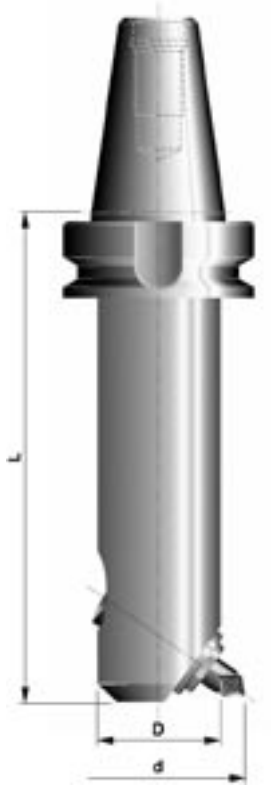

Semi-products, Clamping Pins

SEMI-PRODUCTS OF BORING BARS

Order No.	Dimension-Marking	D /mm/	L /mm/	
513 025 - 01	40×63,5	63,5	160	40×63,5
527 025 - 01	50×63,5	63,5	200	50×63,5
527 025 - 02	50×95,5	95,5	250	50×95,5

Note: The cylindrical part of the semi-products is in the natural, soft constitution.

CLAMPING PINS

Order No.	K	G	d /mm/	d_1 /mm/	l /mm/	L /mm/	Workmanship	
513 000 - 01	45°	M16	17	15	35	60	A	M 16×45
527 000 - 01	45°	M24	25	23	45	85	A	M 24×45
513 000 - 02	30°	M16	17	15	35	60	B	M 16×30
527 000 - 02	30°	M24	25	23	45	85	B	M 24×30

A

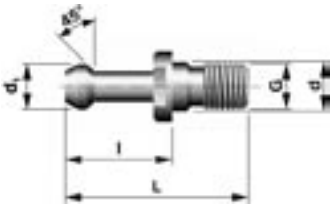

B

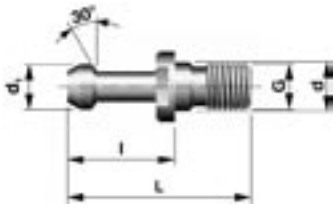

Holders

TOOL SHANKS WITH 7:24 TAPER FOR AUTOMATIC TOOL EXCHANGE

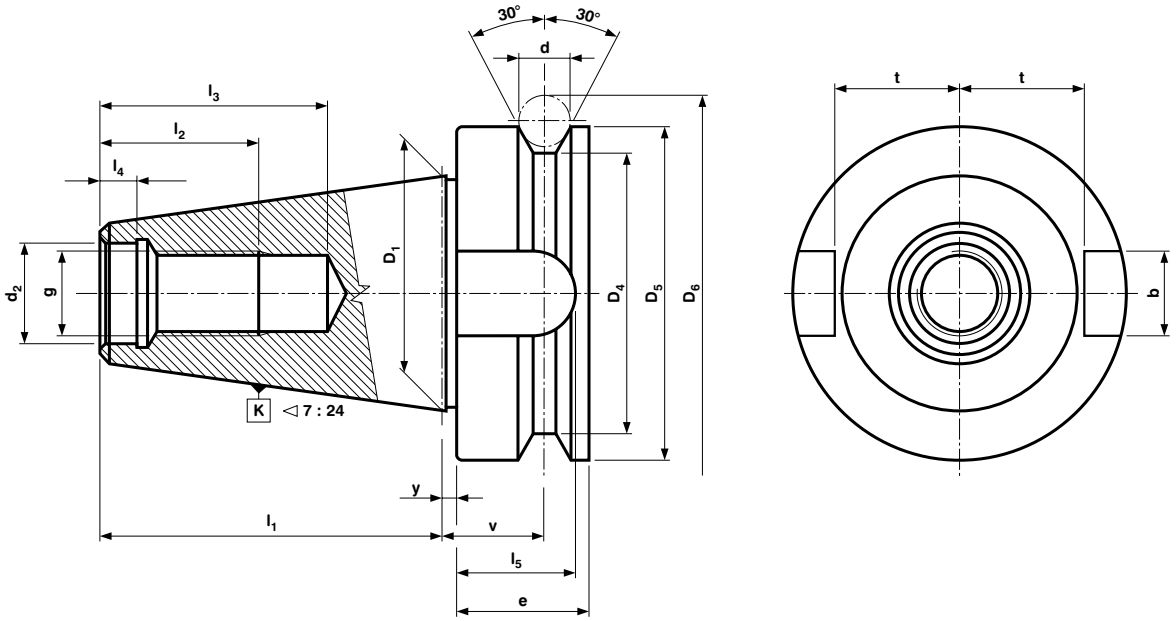

K	D_1	l_1 ±0,2	d_2 H8	g	l_2 min.	l_3 min.	l_4 $^{+0,5}_{-0,0}$	b H12	l_5 min.
40	44,45	65,4	17	M 16	30	43	9	16,1	21
50	69,85	101,8	25	M 24	45	62	13	25,7	31

K	t $^{+0,0}_{-0,2}$	D_4	D_5 h8	e	v ±0,1	d	D_6	y ±0,4
40	22,6	53	63	25	16,6	9	72,68 $_{-0,1}$	2
50	35,4	85	100	35	23,2	14	116,02 $_{-0,15}$	3

Material:
Case hardened steel, tensile strength in core min. 980 N/mm^2

Execution:
Case hardened HR_c 58±2, depth of case min. 0,5 mm

Accuracy of taper shank: AT 3 in accordance with DIN 2080

COLLETS, SYSTEM ER

Sets collet	Dimension-Marking	Chucking capacity	D /mm/	L /mm/	
	ER 11	1÷6	11,7	18,0	ER 11-S
	ER 16	1÷10	17,2	27,5	ER 16-S
	ER 25	1÷16	26,3	34,0	ER 25-S
	ER 32	2÷20	33,1	40,0	ER 32-S
	ER 40	3÷26	41,4	46,0	ER 40-S

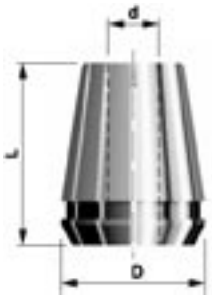

ER 11

Order No.	d /mm/	
591 042-01	**1**	1
591 042-02	**1,5**	1,5
591 042-03	**2**	2
591 042-05	**3**	3
591 042-07	**4**	4
591 042-09	**5**	5
591 042-11	**6**	6

ER 25

Order No.	d /mm/	
591 044-01	**1**	1
591 044-02	**2**	2
591 044-03	**3**	3
591 044-04	**4**	4
591 044-05	**5**	5
591 044-06	**6**	6
591 044-07	**7**	7
591 044-08	**8**	8
591 044-09	**9**	9
591 044-10	**10**	10
591 044-11	**11**	11
591 044-12	**12**	12
591 044-13	**13**	13
591 044-14	**14**	14
591 044-15	**15**	15
591 044-16	**16**	16

ER 32

Katalogové číslo Order No.	d /mm/	
591 045-01	**2**	2
591 045-02	**3**	3
591 045-03	**4**	4
591 045-04	**5**	5
591 045-05	**6**	6
591 045-06	**7**	7
591 045-07	**8**	8
591 045-08	**9**	9
591 045-09	**10**	10
591 045-10	**11**	11
591 045-11	**12**	12
591 045-12	**13**	13
591 045-13	**14**	14
591 045-14	**15**	15
591 045-15	**16**	16
591 045-16	**17**	17
591 045-17	**18**	18
591 045-18	**19**	19
591 045-19	**20**	20

ER 16

Order No.	d /mm/	
591 043-01	**1**	1
591 043-02	**1,5**	1,5
591 043-03	**2**	2
591 043-05	**3**	3
591 043-07	**4**	4
591 043-09	**5**	5
591 043-11	**6**	6
591 043-13	**7**	7
591 043-15	**8**	8
591 043-17	**9**	9
591 043-19	**10**	10

ER 40

Katalogové číslo Order No.	d /mm/	
591 046-01	**3**	3
591 046-02	**4**	4
591 046-03	**5**	5
591 046-04	**6**	6
591 046-05	**7**	7
591 046-06	**8**	8
591 046-07	**9**	9
591 046-08	**10**	10
591 046-09	**11**	11
591 046-10	**12**	12
591 046-11	**13**	13
591 046-12	**14**	14
591 046-13	**15**	15
591 046-14	**16**	16
591 046-15	**17**	17
591 046-16	**18**	18
591 046-17	**19**	19
591 046-18	**20**	20
591 046-19	**21**	21
591 046-20	**22**	22
591 046-21	**23**	23
591 046-22	**24**	24
591 046-23	**25**	25
591 046-24	**26**	26

Collets

Sets collet	Dimension-Marking	D /mm/	L /mm/	
	ER 16 - GB	17,2	27,5	ER 16-S - GB
	ER 25 - GB	26,3	34,0	ER 25-S - GB
	ER 32 - GB	33,1	40,0	ER 32-S - GB
	ER 40 - GB	41,4	46,0	ER 40-S - GB

COLLETS, SYSTEM ER
WITH INTERNAL SQUARE

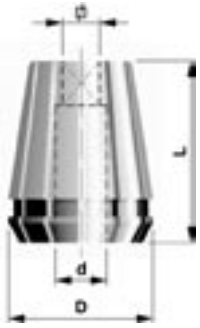

Note: For clamping of the machine taps.

ER 16

Order No.	d× ⌀ /mm/	
599 233-01	**4,5×3,4**	4,5×3,4
599 233-02	**5,5×4,3**	5,5×4,3
599 233-03	**6,0×4,9**	6,0×4,9
599 233-04	**7,0×5,5**	7,0×5,5

Order No.	d× ⌀ /mm/	
599 233-11	**4,5×3,4**	4,5×3,4
599 233-12	**5,5×4,3**	5,5×4,3
599 233-13	**6,0×4,9**	6,5×4,9
599 233-14	**7,0×5,5**	7,0×5,5
599 233-15	**8,0×6,2**	8,0×6,2
599 233-16	**9,0×7,0**	9,0×7,0
599 233-17	**10,0×8,0**	10,0×8,0
599233-18	**11,0×9,0**	11,0×9,0
599 233-19	**12,0×9,0**	12,0×9,0
599 233-20	**14,0×11,0**	14,0×11,0
599 233-21	**16,0×12,0**	16,0×12,0

Order No.	d× ⌀ /mm/	
599 233-31	**4,5×3,4**	4,5×3,4
599 233-32	**5,5×4,3**	5,5×4,3
599 233-33	**6,0×4,9**	6,0×4,9
599 233-34	**7,0×5,5**	7,0×5,5
599 233-35	**8,0×6,2**	8,0×6,2
599 233-36	**9,0×7,0**	9,0×7,0
599 233-37	**10,0×8,0**	10,0×8,0
599 233-38	**11,0×9,0**	11,0×9,0
599 233-39	**12,0×9,0**	12,0×9,0
599 233-40	**14,0×11,0**	14,0×11,0
599 233-41	**16,0×12,0**	16,0×12,0

ER 40

Order No.	d× ⌀ /mm/	
599 233-51	**6,0×4,9**	6,0×4,9
599 233-52	**7,0×5,5**	7,0×5,5
599 233-53	**8,0×6,2**	8,0×6,2
599 233-54	**9,0×7,0**	9,0×7,0
599 233-55	**10,0×8,0**	10,0×8,0
599 233-56	**11,0×9,0**	11,0×9,0
599 233-57	**12,0×9,0**	12,0×9,0
599 233-58	**14,0×11,0**	14,0×11,0
599 233 59	**16,0×12,0**	16,0×12,0
599 233-60	**18,0×14,5**	18,0×14,5
599 233-61	**22,0×18,0**	22,0×18,0

Clamping bushes

CLAMPING BUSHES WITH STEEP TAPER SHANK
FOR MILLING CUTTERS WITH CYLINDRICAL SHANK

Dimension-Marking	Chucking capacity	D /mm/	D1 /mm/	M SH 10	l /mm/	L /mm/	Hook spanner	kg	
30×16	3÷10	31,750	56	M 12	60	128	∅8/44	1,05	30×16
40×16	3÷10	44,450	70	M 16	60	152	∅8/44	1,10	40×16
30×28	6÷20	31,750	56	M 12	90	158	∅10/62	1,20	30×28
40×28	6÷20	44,450	70	M 16	60	162	∅10/62	1,48	40×28
50×28	6÷20	69,850	110	M 24	62	205	∅10/62	3,46	50×28

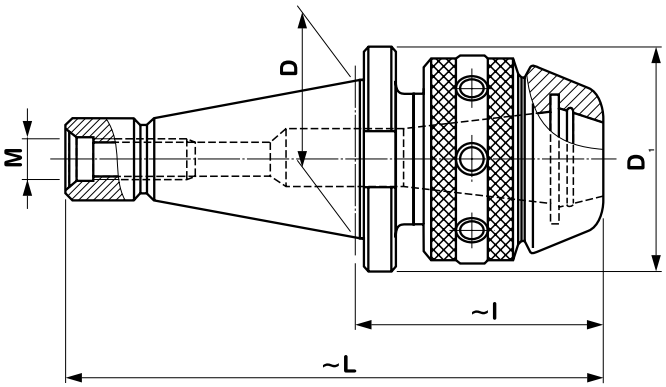

CLAMPING BUSHES WITH MORSE TAPER SHANK
FOR MILLING CUTTERS WITH CYLINDRICAL SHANK

Dimension-Marking	Chucking capacity	D /mm/	D1 /mm/	l /mm/	L /mm/	Hák. klíč Hook spanner	kg	
2×16	3÷10	17,780	43	60	131	∅8/44	0,50	2×16
3×16	3÷10	23,825	43	60	151	∅8/44	0,62	3×16
4×16	3÷10	31,267	43	90	178	∅8/44	1,00	4×16
4×28	6÷20	31,267	62	60	190	∅10/62	1,42	4×28
5×28	6÷20	44,399	62	62	224	∅10/62	2,00	5×28

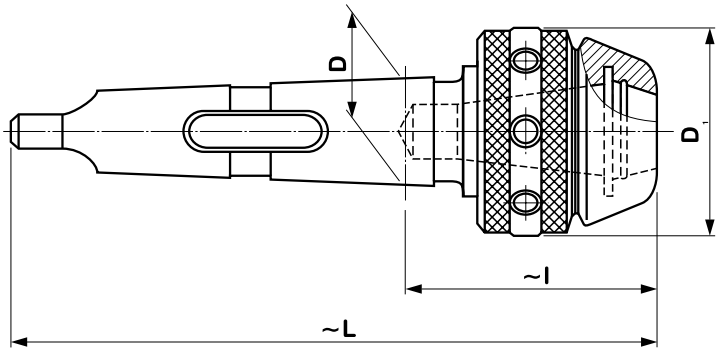

Clamping bushes

Dimension-Marking	Chucking capacity	D /mm/	D1 /mm/	M SH 10	l /mm/	L /mm/	Hook spanner	kg	
2×16	3÷10	17,780	43	M 10	45	122	∅8/44	0,41	2×16
3×16	3÷10	23,825	43	M 12	45	142	∅8/44	0,56	3×16
4×16	3÷10	31,267	43	M 16	50	174	∅8/44	0,89	4×16
3×28	6÷20	23,825	62	M 12	78	158	∅10/62	1,10	3×28
4×28	6÷20	31,267	62	M 16	62	180	∅10/62	1,32	4×28
5×28	6÷20	44,399	62	M 20	62	215	∅10/62	1,86	5×28

CLAMPING BUSHES WITH MORSE TAPER SHANK
FOR MILLING CUTTERS WITH CYLINDRICAL SHANK

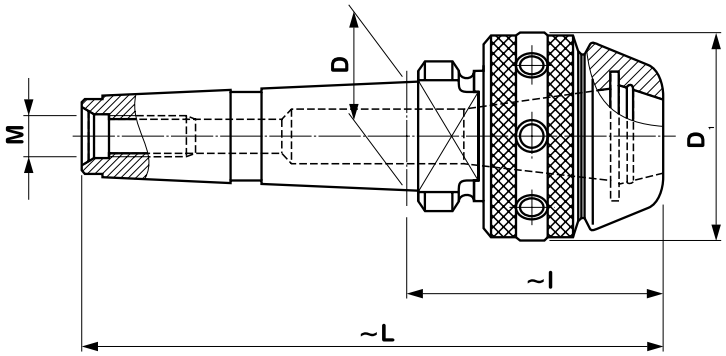

Dimension-Marking	D /mm/	dH7 /mm/	d1 /mm/	L /mm/	kg	
16×3	16	3	12	30	0,016	16×3
16×4	16	4	12	30	0,016	16×4
16×5	16	5	12	30	0,016	16×5
16×6	16	6	12	30	0,016	16×6
16×7	16	7	12	30	0,016	16×7
16×8	16	8	12	30	0,016	16×8
16×9	16	9	12	30	0,016	16×9
16×10	16	10	12	30	0,016	16×10
28×6	28	6	23	50	0,105	28×6
28×7	28	7	23	50	0,105	28×7
28×8	28	8	23	50	0,105	28×8
28×9	28	9	23	50	0,105	28×9
28×10	28	10	23	50	0,105	28×10
28×11	28	11	23	50	0,105	28×11
28×12	28	12	23	50	0,105	28×12
28×13	28	13	23	50	0,105	28×13
28×14	28	14	23	50	0,105	28×14
28×15	28	15	23	50	0,105	28×15
28×16	28	16	23	50	0,105	28×16
28×17	28	17	23	50	0,105	28×17
28×18	28	18	23	50	0,105	28×18
28×19	28	19	23	50	0,105	28×19
28×20	28	20	23	50	0,105	28×20

COLLETS FOR CLAMPING BUSHES
FOR MILLING CUTTERS

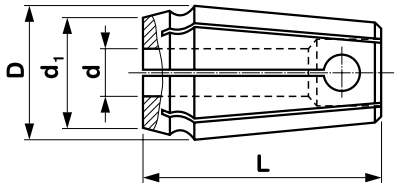

Quick clamping heads

QUICK CLAMPING HEADS

Dimension-Marking	L j 16 /mm/	d H7 /mm/	d_1 /mm/	D /mm/	kg	Morse hollow	
2×155	155	25	38	52	0,77	1; 2	2
3×190	190	32	46	62	1,30	1; 2; 3	3
4×225	225	46	62	82	2,40	2; 3; 4	4
5×290	290	54	74	100	5,28	3; 4; 5	5

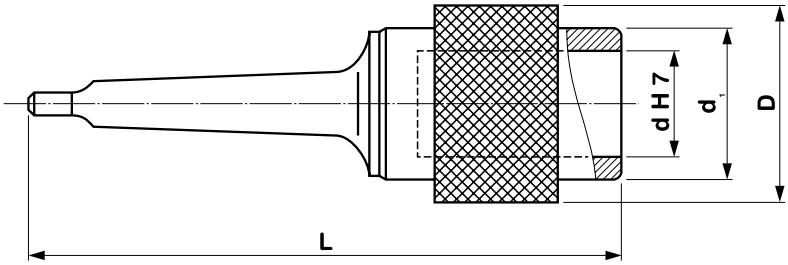

SOLID EXCHANGEABLE INSERTS
FOR QUICK CLAMPING HEADS

Dimension-Marking	Morse hollow	L /mm/	d f7 /mm/	kg	
2×1	1	65	25	0,23	2×1
2×2	2	80	25	0,20	2×2
3×1	1	65	32	0,40	3×1
3×2	2	80	32	0,42	3×2
3×3	3	100	32	0,37	3×3
4×2	2	80	46	1,00	4×2
4×3	3	100	46	1,10	4×3
4×4	4	125	46	1,12	4×4
5×3	3	100	54	1,65	5×3
5×4	4	130	54	1,70	5×4
5×5	5	160	54	1,40	5×5

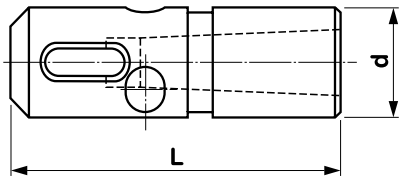

FREE EXCHANGEABLE INSERTS
FOR QUICK CLAMPING HEADS

Dimension-Marking	Morse hollow	L /mm/	d f7 /mm/	d1 /mm/	kg	
2×1	1	78	25	24	0,20	2×1
2×2	2	90	25	24	0,15	2×2
3×1	1	78	32	31	0,40	3×1
3×2	2	92	32	31	0,38	3×2
3×3	3	110	32	31	0,33	3×3
4×2	2	92	46	45	0,95	4×2
4×3	3	115	46	45	1,05	4×3
4×4	4	138	46	45	1,00	4×4
5×3	3	115	54	53	1,65	5×3
5×4	4	138	54	53	1,72	5×4
5×5	5	172	54	53	1,70	5×5

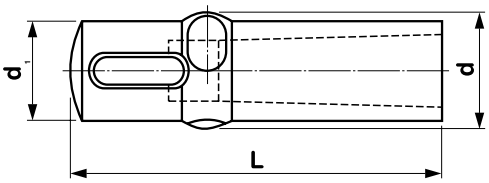

Clamping tools

ADAPTORS WITH MORSE TAPER

Mk1	Mk2	∅d /mm/	∅d1 /mm/	L /mm/	a /mm/	kg	
2	1	17,780	12,065	92	17	0,10	2×1
3	1	23,825	12,065	99	5	0,20	3×1
3	2	23,825	17,780	112	18	0,20	3×2
4	1	31,276	12,065	124	6,5	0,60	4×1
4	2	31,276	17,780	124	6,5	0,50	4×2
4	3	44,399	23,825	140	22,5	0,40	4×3
5	1	44,399	12,065	156	6,5	1,60	5×1
5	2	44,399	17,780	156	6,5	1,40	5×2
5	3	44,399	23,825	156	6,5	1,20	5×3
5	4	63,348	31,276	171	21,5	1,00	5×4
6	1	63,348	12,065	218	8	4,10	6×1
6	2	63,348	17,780	218	8	3,90	6×2
6	3	63,348	23,825	218	8	3,77	6×3
6	4	63,348	31,276	218	8	3,40	6×4
6	5	63,348	44,399	218	8	2,50	6×5

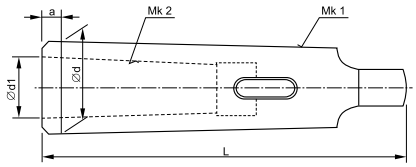

EXTENDED ADAPTORS
WITH MORSE TAPER

Mk1	Mk2	∅d /mm/	∅d1 /mm/	∅d2 /mm/	L /mm/	a /mm/	kg	
2	1	17,780	12,065	20	160	80	0,25	2×1
2	2	17,780	17,780	30	180	100	0,35	2×2
2	3	17,780	23,825	36	200	120	0,64	2×3
3	1	23,825	12,065	20	175	76	0,50	3×1
3	2	23,825	17,780	30	194	95	0,65	3×2
3	3	23,825	23,825	36	240	141	0,80	3×3
3	4	23,825	31,267	48	150	151	1,70	3×4
4	1	31,267	12,065	20	205	81	0,80	4×1
4	2	31,267	17,780	30	215	91	0,91	4×2
4	3	31,267	23,825	36	260	136	1,15	4×3
4	4	31,267	31,267	48	280	156	1,95	4×4
4	5	31,267	44,399	63	300	176	3,44	4×5
5	1	44,399	12,065	20	235	80	1,90	5×1
5	2	44,399	17,780	30	250	95	2,00	5×2
5	3	44,399	23,825	36	268	112	2,05	5×3
5	4	44,399	31,267	48	300	145	2,80	5×4
6	1	63,348	12,065	20	300	82	4,20	6×1
6	2	63,348	17,780	30	310	92	4,50	6×2
6	3	63,348	23,825	36	330	112	4,80	6×3
6	4	63,348	31,267	48	355	137	5,30	6×4
6	5	63,348	44,399	63	390	172	6,61	6×5

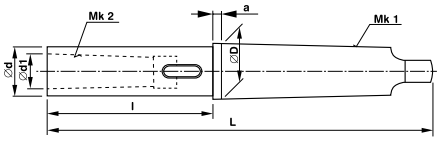

ADAPTORS
WITH MORSE TAPER AND INSIDE SQUARE

Mk	k D 11	∅d /mm/	L /mm/	l1 /mm/	a /mm/	kg	
1	4,0	12,065	70	8	8	0,045	1×4
1	4,5	12,065	70	8	8	0,045	1×4,5
1	5,0	12,065	70	9	8	0,044	1×5
1	5,6	12,065	70	9	8	0,044	1×5,6
2	6,3	17,780	85	10	10	0,120	2×6,3
2	7,1	17,780	85	11	10	0,120	2×7,1
2	8,0	17,780	85	12	10	0,110	2×8
2	9,0	17,780	85	13	10	0,110	2×9
3	10,0	23,825	105	14	11	0,270	3×10
3	11,2	23,825	105	15	11	0,260	3×11,2
3	12,5	23,825	105	17	11	0,250	3×12,5
4	14,0	31,267	130	20	12,5	0,560	4×14
4	16,0	31,267	130	22	12,5	0,530	4×16
4	18,0	31,267	130	24	12,5	0,500	4×18
5	20,0	44,399	165	26	15,5	1,470	5×20
5	22,4	44,399	165	28	15,5	1,400	5×22,4
5	25,0	44,399	165	30	15,5	1,360	5×25
6	28,0	63,348	230	33	20	4,020	6×28
6	31,5	63,348	230	40	20	3,750	6×31,5

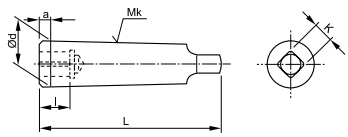

Clamping tools

KEY DRIVERS

Size	For MORSE taper	For metric taper	L /mm/	a /mm/	h /mm/	kg	
1	1; 2		140	5	19	0,06	1
3	3; 4		190	7	25	0,20	3
5	5; 6	80	250	15	35	0,65	5
7		100÷160	350	30	57	2,75	7

ADAPTORS WITH STEEP TAPER SHANK 7:24 AND STEEP HOLLOW 7:24

ISO 1	ISO 2	∅d /mm/	∅d1 /mm/	∅d2 /mm/	L /mm/	kg	
40	30	44,450	31,750	63	83	0,35	40x30
50	40	69,850	44,450	100	122,5	1,90	50x40
50	45	69,850	57,150	110	170	3,60	50x45
55	50	88,900	69,850	130	157	2,90	55x50
60	45	107,950	57,150	160	187	8,15	60x45
60	50	107,950	69,820	160	190	5,60	60x50
60	55	107,950	88,900	160	190	4,90	60x55

For clamping are used couplings ČSN 241483

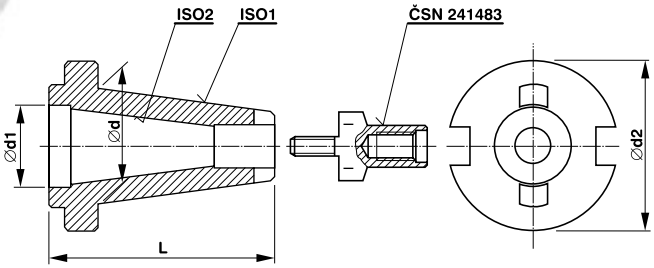

ADAPTORS WITH STEEP TAPER SHANK 7:24 AND MORSE HOLLOW

ISO	Mk	∅d /mm/	∅d1 /mm/	∅d2 /mm/	L /mm/	kg	
30	2	31,750	17,780	50	65	0,30	30x2
40	2	44,450	17,780	63	75	0,52	40x2
40	3	44,450	23,825	63	93	0,67	40x3
50	3	69,850	23,825	100	114	2,15	50x3
50	4	69,850	44,399	100	160	2,75	50x4
55	4	88,900	31,267	130	144	4,75	55x4
55	5	88,900	44,399	130	162	4,10	55x5
60	4	107,950	31,267	160	177	8,05	60x4
60	5	107,950	44,399	160	177	6,90	60x5
60	6	107,950	63,348	160	220	7,70	60x6

For clamping are used couplings ČSN 241483

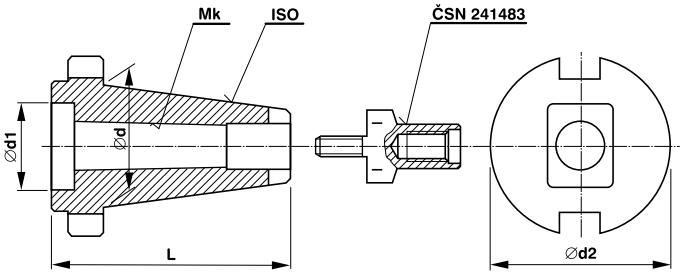

Clamping tools

THREE JAWS DRILL CHUCKS WITH KEY AND INSIDE CLAMPING TAPER OR CLAMPING THREAD

Size	Clamp. range in mm	Clamp. range in inches	Clamp. taper DIN	kg	Wrench	
10	1÷10	1/32÷3/8	B16	0,32	6	10 B16
13	1,5÷13	1/16÷1/2	B12	0,32	6	13 B12
13	1,5÷13	1/16÷1/2	B16	0,52	6	13 B16
16	3÷16	1/8÷5/8	B16	0,76	7	16 B16
16	3÷16	1/8÷5/8	B18	0,84	7	16 B18
20	5÷20	13/64÷13/16	B22	1,40	7	20 B22

Wrenches 241321 size 6, 7 – delivered separately

Size	Clamp. range in mm	Clamp. range in inches	Clamp. thread	kg	Wrench	
10	1÷10	1/32÷3/8	1/2÷20	0,29	6	10Z 1/2
10	1÷10	1/16÷1/2	3/8÷24	0,29	6	10Z 3/8
13	1,5÷13	1/16÷1/2	1/2÷20	0,42	6	13Z 1/2
13	1,5÷13	1/16÷1/2	3/8÷24	0,42	6	13Z 3/8
16	3÷16	1/8÷5/8	1/2÷20	0,82	7	16Z 1/2
16	3÷16	1/8÷5/8	5/8÷18	0,82	7	16Z 5/8
20	5÷20	13/64÷13/16	5/8÷18	1,35	7	20Z 5/8

Wrenches 241321 size 6, 7 – delivered separately

SELF-LOCKING DRILL CHUCK WITH INSIDECLAMPING TAPER

Size	Clamp. range in mm	Clamp. range in inches	Clamp. taper DIN	kg	
6	0,5÷6	1/64÷1/4	B12	0,28	6 B12
10	0,5÷10	1/64÷3/8	B16	0,45	10 B16
13	1,0÷13	1/32÷1/2	B16	0,60	13 B16
16	3÷16	1/8÷5/8	B16	1,15	16 B16

TAPER CLAMPING ARBORS FOR DRILL CHUCKS

Clamping Taper	Morse Taper	Total lenght	kg	
B10	0	80	0,037	B10x0
B10	1	86	0,60	B10x1
B10	2	102	0,150	B10x2
B12	1	90	0,065	B12x1
B12	2	105	0,028	B12x2
B12	3	124	0,286	B12x3
B16	1	97	0,087	B16x1
B16	2	112	0,161	B16x2
B16	3	133	0,320	B16x3
B16	4	145	0,421	B16x4
B18	1	106	0,115	B18x1
B18	2	120	0,188	B18x2
B18	3	140	0,341	B18x3
B18	4	156	0,586	B18x4
B22	2	128	0,234	B22x2
B22	3	147	0,343	B22x3
B22	4	175	0,702	B22x4

Holders

HOLDERS FOR SHELL REAMERS DRILLS AND REAMERS

d /mm/	l /mm/	l_1 /mm/	L /mm/	MORSE Shank	kg	241210
13	45	151	250	3	0,47	13
16	50	162	261	3	0,75	16
19	56	174	298	4	1,18	19
22	63	188	312	4	2,1	22
27	71	203	359	5	4,8	27
32	80	220	376	5	5,05	32
40	90	240	396	5	5,4	40
50	100	260	416	5	7,35	50

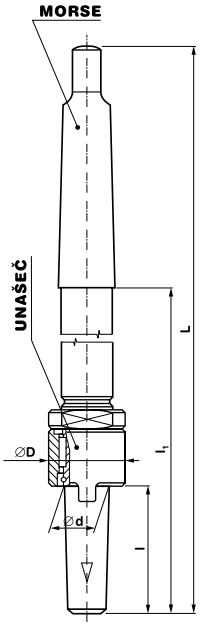

Workmanship: Arbor and driver are made from the case hardened structural steel. Shell reamer drills and reamers can be removed by using of the nut situated behind the driver. It is possible to order the driver as an extra item.

Usability: Holders are used to clamping shell reamer drills ČSN 22 1414 and shell reamers ČSN 22 1432, ČSN 22 1435 and ČSN 22 1447.

DRIVER

d /mm/	D /mm/	kg	
13	23	0,04	13
16	27	0,05	16
19	32	0,09	19
22	39	0,15	22
27	46	0,28	27
32	56	0,56	32
40	65	0,7	40
50	80	1,3	50

Expanding arbors

d /mm/	Taper shank	l /mm/	L /mm/	kg	
12	3	30	125	0,31	12
13	3	30	125	0,32	13
14	3	30	125	0,33	14
15	3	40	135	0,35	15
16	3	40	135	0,36	16
17	3	40	135	0,37	17
18	3	40	135	0,38	18
19	3	50	145	0,41	19
20	3	50	145	0,42	20
21	3	50	145	0,43	21
22	3	50	145	0,44	22
23	3	60	155	0,47	23
24	3	60	155	0,49	24
25	3	60	155	0,51	25
26	3	60	155	0,53	26
27	3	60	155	0,55	27
28	3	70	190	0,88	28
29	4	70	190	0,91	29
30	4	70	190	0,93	30
31	4	70	190	0,95	31
32	4	70	190	0,97	32
33	4	80	200	1,06	33
34	4	80	200	1,09	34
35	4	80	200	1,12	35
36	4	80	200	1,15	36
38	4	80	200	1,20	38
40	4	90	210	1,40	40
42	4	90	210	1,46	42
44	4	90	210	1,54	44
45	4	90	210	1,58	45
46	5	100	248	2,62	46
48	5	100	248	2,71	48
50	5	100	248	2,81	50
52	5	100	248	2,91	52
55	5	110	258	3,24	55
56	5	110	258	3,30	56
58	5	110	258	3,39	58
60	5	110	258	3,58	60
62	5	120	268	3,83	62
63	5	120	268	3,90	63
65	5	120	268	4,04	65
68	5	120	268	4,25	68

EXPANDING ARBORS

Clamping tools

DEAD CENTRES WITH 60° POINT ANGLE

MORSE Mk	∅d /mm/	L /mm/	l /mm/	V /mm/	Q /kg/	kg	
0	8	70	20	0,003	60	0,03	Mk0
1	11	80	26,5	0,003	125	0,06	Mk1
2	17	100	36	0,003	325	0,16	Mk2
3	23	125	44	0,003	650	0,40	Mk3
4	30	160	57,5	0,003	1000	0,80	Mk4
5	42	200	70,5	0,003	2500	1,80	Mk5
6	60	280	98	0,003	5000	5,45	Mk6

Q - max. mass of workpiece
V - max. run-out

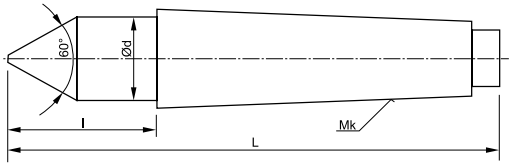

Dead centres of the size Mk 0÷5 complete hardened to HRc 58÷62. The point on the dead centre size Mk 6 is hardened in lenght 80 mm, last part is heat treated. Tapered shank MORSE ČSN 22 0420, DIN 228 is without the clamping thred.

DEAD CENTRES WITH 60° POINT ANGLE AND SINTERED CARBIDE TIP

MORSE Mk	∅d /mm/	L /mm/	l /mm/	V /mm/	Q /kg/	kg	
0	8	70	17	0,003	20	0,032	Mk0
1	11	80	23	0,003	50	0,065	Mk1
2	17	100	32	0,003	130	0,165	Mk2
3	23	125	40	0,003	250	0,42	Mk3
4	30	160	52	0,003	450	0,83	Mk4
5	42	200	64	0,003	1000	1,85	Mk5
6	60	280	91	0,003	1600	5,5	Mk6

Q - max. mass of workpiece
V - max. run-out

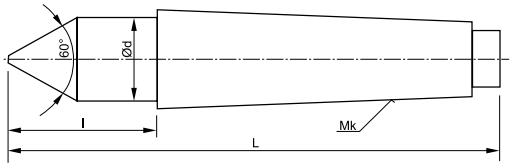

DEAD CENTRES WITH 60° POINT ANGLE AND SINTERED CARBIDE TIP

MORSE Mk	∅d /mm/	L /mm/	l /mm/	V /mm/	Q /kg/	kg	
0	8	70	20	0,003	60	0,03	Mk0
1	11	80	23	0,003	125	0,06	Mk1
2	17	100	31	0,003	325	0,16	Mk2
3	23	125	40	0,003	650	0,4	Mk3
4	30	160	51	0,003	1000	0,8	Mk4
5	42	200	64	0,003	2500	1,8	Mk5
6	60	280	90	0,003	15000	5,45	Mk6

Q - max. mass of workpiece
V - max. run-out

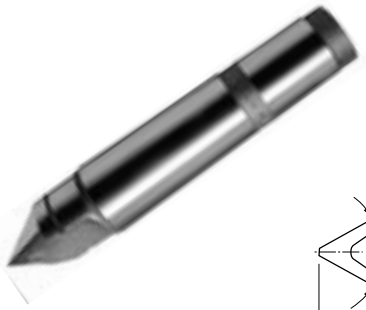

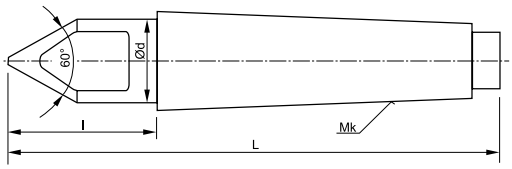

Clamping tools

LIVE CENTRES WITH POINT ANGLE OF 60° AND 90° FOR CLAMPING OF HOLLOW WORKPIECES

Morse Mk	α /°/	∅D /mm/	∅d /mm/	L /mm/	l /mm/	U /min^{-1}/	Q /kg/	V /mm/	kg	
3	60	80	35	162	81	5000	400	0,025	2,1	Mk3
3	90	80	32	162	81	5000	400	0,025	2,1	Mk3
4	60	115	44	194	92	4000	1300	0,025	4,4	Mk4
4	90	115	47	194	92	4000	1300	0,025	4,4	Mk4
5	60	135	46	240	110	3500	2000	0,025	8,0	Mk5
5	90	135	45	240	110	3500	2000	0,025	8,0	Mk5
6	60	170	64	308	126	2500	4000	0,025	23,5	Mk6
6	90	170	70	308	126	2500	4000	0,025	23,5	Mk6
6	90	230	96	308	126	2500	4000	0,025	23,5	Mk6

Q - max. mass of workpiece
V - max. run-out

Rotating part is ended with taper 1:10 for put on the insert with point angle 60° (U1) or 90° (U2). Taper shank MORSE ČSN 22 0420, DIN 228, ISO 296 without the clamping thread.

Accessories: 1 set exchangeable insert match to Mk. Special workmanship of the points with inserts of max. D in accordance with the table or non disassemble.

Spare parts: disassemble clamping inserts.

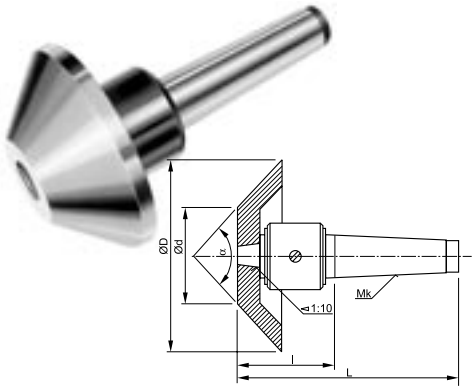

LIVE CENTRES WITH 60° POINT ANGLE

Morse Mk	∅D /mm/	∅d /mm/	L /mm/	l /mm/	U /min^{-1}/	Q /kg/	V /mm/	kg	
1	34	17	114	24,5	6000	50	0,005	0,25	Mk1
2	36	22	125	25,5	6000	340	0,005	0,34	Mk2
3	47	30	162	32	5000	400	0,005	0,80	Mk3
4	55	35	194	37,5	4000	1300	0,005	1,37	Mk4
5	70	45	240	47	3500	2000	0,005	3,03	Mk5
6	90	60	318	62	2500	4000	0,005	7,18	Mk6

Q - max. mass of workpiece
V - max. run-out

Set up of the claerance in the face radial bearing. Point Mk 1 is for clamping of very light workpieces. Taper shank MORSE ČSN 22 0420, DIN 228, ISO 296 without the clamping thread.

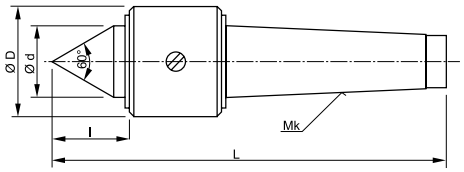

LIVE CENTRES WITH INTERCHANGEABLE INSERTS

Morse Mk	∅D /mm/	∅d /mm/	L /mm/	l /mm/	U /min^{-1}/	Q /kg/	V /mm/	kg	
2	36	10	110	45,5	6000	340	0,010	0,75	Mk2
3	47	15	145	61	5000	400	0,010	1,52	Mk3
4	55	20	174	76	4000	1300	0,010	2,88	Mk4
5	70	25	227	103	3500	2000	0,010	5,75	Mk5
6	90	30	305	132,5	2500	4000	0,010	13,85	Mk6

Q - max. mass of workpiece
V - max. run-out

Taper shank MORSE ČSN 22 0420, DIN 228, ISO 296 without the clamping thread.
Accessories: Set of exchangeable inserts (a-g) and push-out fork. Special workmanship: points with the form of clamping inserts on requirement.
Spare parts: exchangeable inserts.

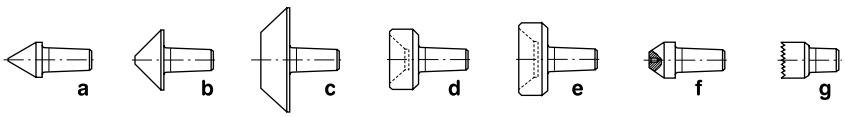

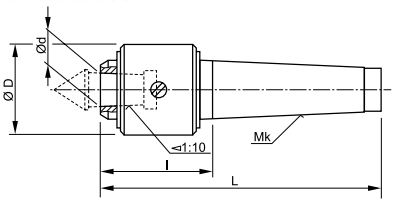

Clamping tools

LONG NOSE LIVE

CENTRES ANGLE POINT ANGLE 60°

Morse Mk	∅D /mm/	∅d /mm/	L /mm/	l /mm/	U /min^{-1}/	Q /kg/	V /mm/	kg	
2	36	10	128,5	65	6000	270	0,008	0,36	Mk2
3	47	30	167	86	5000	320	0,008	0,84	Mk3
4	55	35	207,5	104	4000	1000	0,008	1,45	Mk4
5	69,5	45	259	129	3500	1800	0,008	3,20	Mk5
6	89	60	341	160,5	2500	3200	0,008	7,75	Mk6

Q - max. mass of workpiece by 63 revolution/min^{-1}, by durability Lh (Lh = 500 operation hours)

V - max. ran-out

U - max. revolution

Taper shank MORSE ČSN 22 0420, DIN 228, ISO 296 without the clamping thread.

Special workmanship: with demanded form and overhang of the turning part of point.

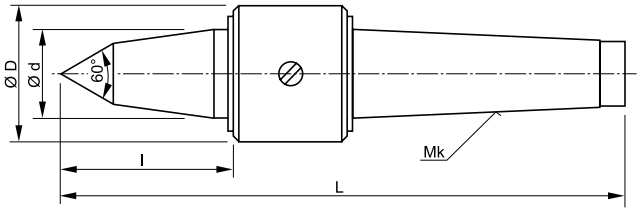

TOOL BITS HOLDER

BIT FOR SEMI-PRODUCT CUTTER FORM E

Number	L /mm/	h /mm/	
1	100	6	6×100
2	100	8÷10	8-10×100
3	100	12÷18	12-18×100
4	160	20÷25	20-25×160
5	160	32÷40	32-40×160

h - height of tool bit

L - total lenght

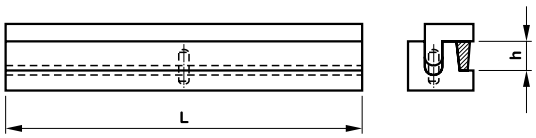

CIRCULAR DIE STOCKS

Hole diameter /mm/	Total length /mm/	kg	
16	140	0,045	16
20	180	0,080	20
25	220	0,140	25
30	280	0,240	30
38	330	0,430	38
45	400	0,700	45
55	480	1,030	55
65	560	1,460	65

Clamping tools, Holders

ADJUSTABLE TAP WRENCHES

Hole diameter /mm/	Total length /mm/	kg	
2,00 - 4,50	125	0,035	2,00-4,50
3,15 - 6,30	210	0,105	3,15-6,30
2,50 - 7,10	210	0,105	2,50-7,10
3,55 - 9,00	310	0,350	3,55-9,00
5,60 - 16,00	400	0,900	5,60-16,00

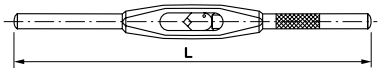

T-HANDLE TAP WRENCHES

Order No.	Clamping range /mm/	/mm/	
731-1	2,6÷5,5	85	2,6-5,5
731-2	4,6÷8,0	110	4,6-8

CUTTING-OFF TOOLHOLDER

FOR TOOLS INDEX – FORM

Number	h /mm/	
1	12	1
2	16	2
3	18	3
4	20	4
5	25	5

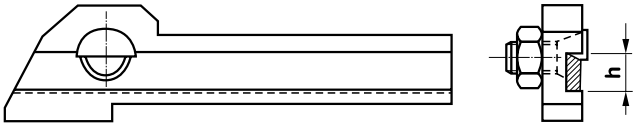

Holders

SLOTTING TOOL HOLDER

TOOL TYPE – 22 3680, 22 3681, 22 3683

b×b /mm/	d /mm/	241025
25×25	12	25x25
32×32	18	32x32
40×40	22	40x40
50×50	30	50x50

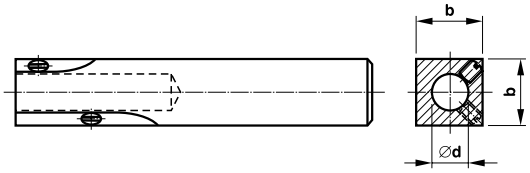

SLOTTING TOOL HOLDER TOOL

TYPE – 22 3682

b×b /mm/	a /mm/	
25×25	8	25x25-8
25×25	10	25x25-10
25×25	12	25x25-12
32×32	14	32x32-14
32×32	16	32x32-16
40×40	18	40x40-18
40×40	20	40x40-20
50×50	22	50x50-22
50×50	25	50x50-25

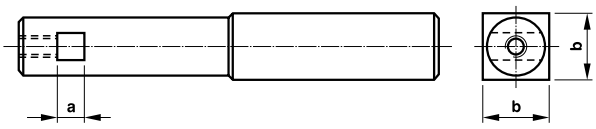

TOOL HOLDER

FOR SEMI-PRODUCTS CUTTER BIT FORM B

Number	b /mm/	L /mm/	
0	4÷6	140	4-6
1	7÷9	140	7-9
2	10÷12	160	10-12
3	13÷16	180	13-16
4	17÷19	200	17-19

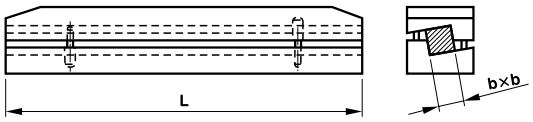

Universal boring heads – Vhu

BASIC TECHNICAL DATA

	Size	Vhu36	Vhu56	Vhu80	Vhu110	Vhu125	Vhu160
Slide motion	max. [mm]	36	56	80	110	125	160
Facing diameter	max. [mm]	230	320	380	430	610	690
Boring diameter	max. [mm]	225	360	410	450	650	720
Automatic feed	[mm.ot^{-1}] [mm.rev^{-1}] [mm.rev^{-1}]	0,02 0,04 0,06	0,05 – 0,10 – 0,15 – 0,20				
Hand rapid feed	[mm.ot^{-1}] [mm.rev^{-1}] [mm.rev^{-1}]	3	3	3	3	4	4
Accuracy of adjustment			1DIV=0,01 mm/∅				
Diameter of clamping holes	d H8 [mm]	16	25	25	25	32	32
Weight of head	[kg]	2,1	7,5	8,1	8,4	12,4	13,8
Weight of set	[kg]	5,3	18,6	19,0	19,5	33,0	34,3
Taper shanks	VK	VK360	VK800, VK801			VK801	
Dimen. of the wooden box	[mm]	320× 270× 85	490×350×165			540×380×170	

Vhu – as a boring device - considerably increases possibilities of boring, drilling and milling machines. These heads are suitable for precision boring of cylind-rical holes, and for machining of external cylindrical surfaces. The boring head Vhu by means of an au-tomatic slide feed makes possible facing, backfacing and taper machining. The slide feed is adjustable in three or four grades and is stopped on adjustable dog by the pin clutch. The feed is derived from the rotary motion of the head, if one of the feed is adjusted, the pin of the clutch is put in and the brake ring is held by means of the stop bar.
The screw (34) serves for quick adjusting of slide and, on the contrary, the worm with the scale is used for fine adjusting of precision boring. (1 division = slide movement of 0,05 mm).
These heads are delivered with primary accessories in wooden boxes. The taper shank is exchangeable and it is not a component of primary accessories. Therefore it is necessary to order taper shank as a special item. The boring heads Vhu 110/Vhu 160 are modifications of the basic Vhu 80 resp. Vhu 125 types; they have extended slides and screws.

HEADS VHU

LEGENDA – LEGEND

5 – clutch
6 – braking ring
27 – slide
34 – screw
41 – worm with scale 46 – body
50 – stopping bar
K – taper shank

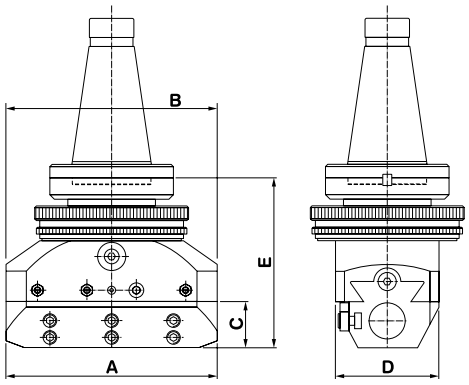

Type	Order No.	A /mm/	B /mm/	C /mm/	D /mm/	E /mm/	
Vhu 36	201.016	78	78	28	53	100	Vhu 36
Vhu 56	201.023	115	115	36	80	134	Vhu 56
Vhu 80	201.040	140	140	36	80	134	Vhu 80
Vhu 110	201.047	165	140	36	80	134	Vhu 110
Vhu 125	201.054	190	190	42	92	151	Vhu 125
Vhu 160	201.061	225	190	42	92	159	Vhu 160

Basic machining operations carried out by the boring heads Vhu

HEADS VHU

Type	Z_{max} /mm/	d_{max} /mm/							h_{max} /mm/	
		d_1	d_2	d_3	d_4	d_5	d_6	d_7	h_1	h_2
Vhu 36	36	92	160	225	88	230	200	200	45	80
Vhu 56	56	170	250	360	210	320	300	280	125	85
Vhu 80	80	210	300	410	180	380	380	320	125	110
Vhu 110	110	270	340	450	240	430	430	370	125	110
Vhu 125	125	280	390	650	245	610	600	530	205	115
Vhu 160	160	350	480	720	340	690	690	610	205	115

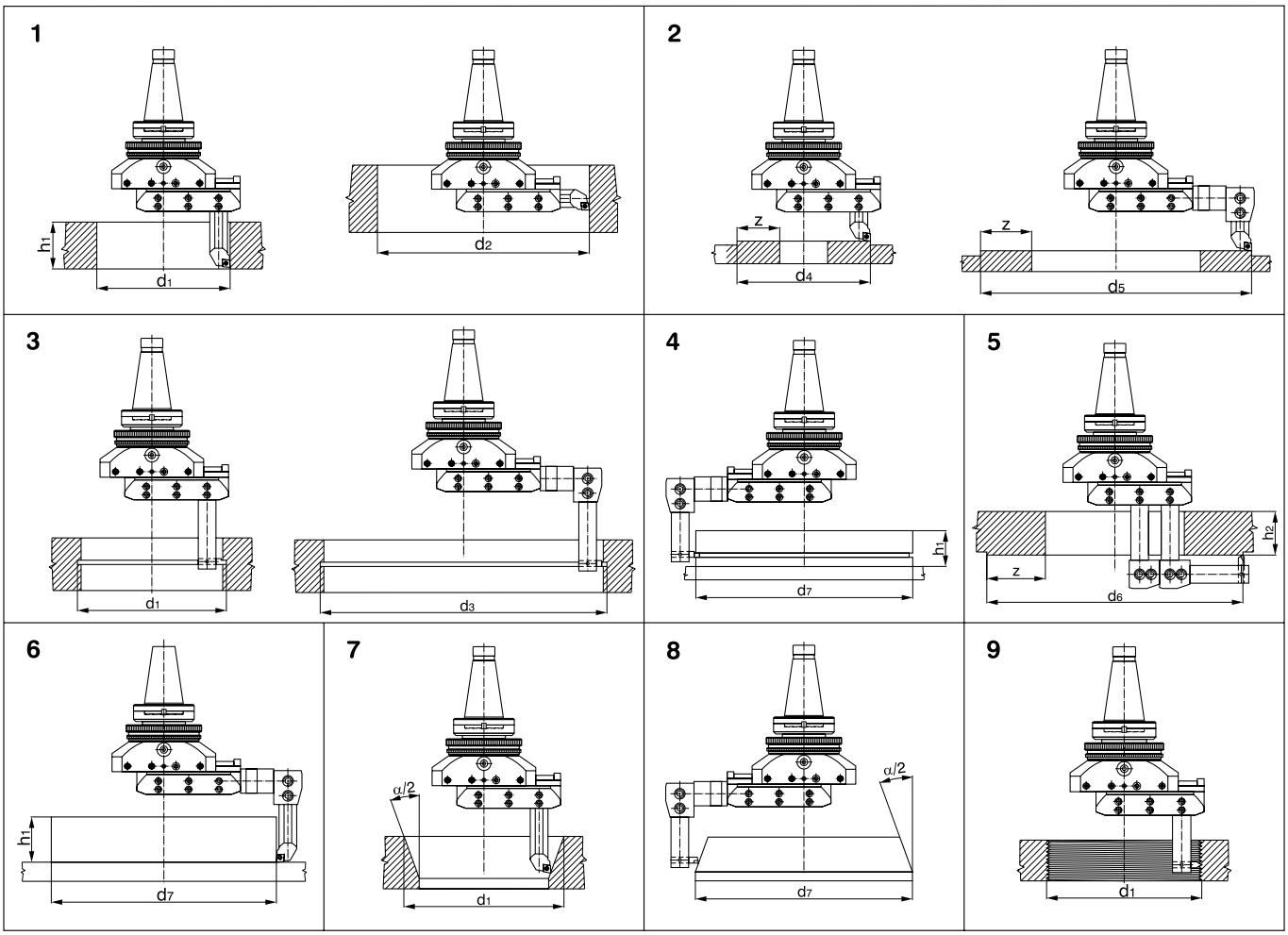

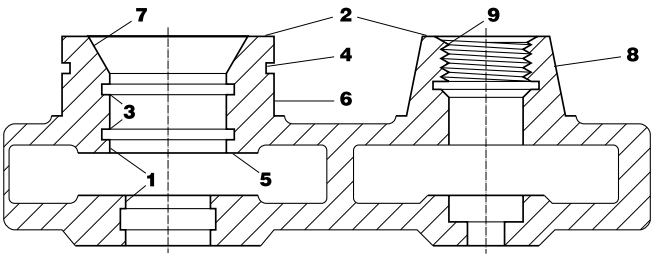

POPIS – DESCRIPTION

1	Boring
2	Facing
3	Internal recessing
4	Recessing
5	Back facing
6	Machining of external cylindrical surface
7	Boring of taper hole
8	Machining of external taper
9	Thread cutting

Boring heads – Vh and Vhs

PRECISION BORING HEADS VH

Type	Order No.	Range	D H7 /mm/	A1 /mm/	B /mm/	l /mm/		
Vh 70	205.014	6÷105 (130)* VK360	16	70	62	82	2,0/3,6	70
Vh 110	205.021	15÷165 (300)* VK801	25	110	84	100	4,6/9,0	110
Vh 140	205.038	15÷225 (400)* VK801	25	140	82	104	6,3/11,2	140

* - by holder using

–ADJUSTING ACCURACY

1DIV	**I.** 1 DIV = 0,02 mm/∅ **II.** 1 DIV = 0,0025 mm/∅	**Vh 70** **Vh 110** **Vh 140**

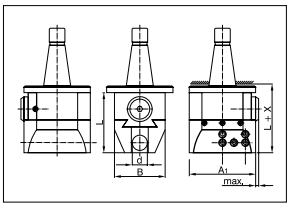

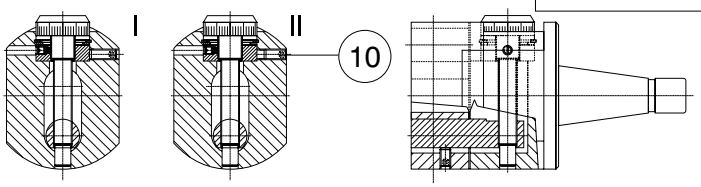

Precision boring heads are used for precision boring of cylindrical holes in the given range of diametres. Their accuracy of the boring diameter adjustment proceeds from the differential screw and subsidiary round nut. This nut is either carried by the screw and then they rotate together – Position I – for the coarse adjust-ment, or this nut srews on the screw – Position II for the fine adjustment. In this case, the nut is braked by tightening the screw no. 10.
Boring heads are delivered with primary accessories in wooden boxes. The taper shank is exchangeable and it is not included in the primary accessories. The taper shank has to be ordered as a special item.

ADJUSTABLE BORING HEADS VHS

Type	Order No.	Cone		D/A /mm/	a /mm/	b /mm/	c /mm/		
Vhs 5-50	204.017	MK2 - M8	DIN228A	10/–	50	45	55	0,65/1,2	5-50/MK2 - M8
Vhs 5-50	204.024	MK2 - M10	DIN228A	10/–	50	45	55	0,65/1,2	5-50/MK2 - M10
Vhs 5-50	204.031	MK3 - M10	DIN228A	10/–	50	45	55,5	0,75/1,3	5-50/MK3 - M10
Vhs 5-50	204.048	MK3 - M12	DIN228A	10/–	50	45	55,5	0,75/1,3	5-50/MK3 - M12
Vhs 5-50	204.055	ISO 40	DIN2080	10/–	50	45	70,6	1,3/2,1	5-50/ISO 40
Vhs 10-100	204.062	MK4-M14	DIN2207	16/–	79	60	83,5	2,0/3,1	10-100/MK4-M14
Vhs 10-100	204.079	MK4 - M16	DIN2207	16/–	79	60	83,5	2,0/3,1	10-100/MK4 - M16
Vhs 10-125	204.086	MK4	DIN1806	25/20	79	60	97,5	2,0/3,1	10-125/MK4
Vhs 10-125	204.093	ISO 40	DIN2080	25/20	79	60	110,6	2,5/5,0	10-125/ISO 40
Vhs 10-125	204.109	MAS-BT 40		25/20	79	60	136	2,7/5,3	10-125/MAS-BT 40
Vhs 40-180	204.116	MK5	DIN1806	32/25	102	76	137,5	5,4/9,5	40-180/MK5
Vhs 40-180	204.123	ISO 40	DIN2080	32/25	102	76	150,6	5,0/9,5	40-180/ISO 40
Vhs 40-180	204.130	ISO 50	DIN2080	32/25	102	76	156,2	6,9/11,0	40-180/ISO 50
Vhs 40-180	204.147	ISO 40	DIN6987/A	32/25	102	76	167,1	5,5/9,5	40-180/ISO 40A

ADJUSTING ACCURACY

1DIV	1 DIV = 0,01 mm/∅ 1 DIV = 0,02 mm/∅	**Vhs 5 – 50** **Vhs 10 – 100** **Vhs 10 – 125** **Vhs 40 – 180**

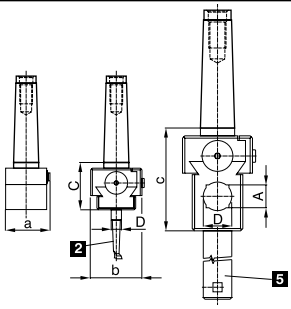

Adjustable boring heads are used for precision boring of cylindrical holes on boring machines or on the other machine tools. The taper shank is not exchangeable it is a constituent part of the body. The clamping–holes in the slide are round or combined for clamping of the round or square section of shanks. These heads are delivered with accessories in wooden boxes. The working range of the head is given in their marking (Vhs 5 – 50: d_{min}= 5 mm, d_{max}= 50 mm.)

Accessories of boring heads Vh and Vhs

TOOL

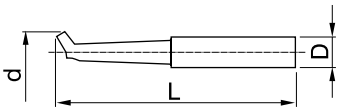

1

Accessories Vh and Vhs	Size d×D×L	Pieces	
Vh 70	5×10×60	1	5×10×60
Vh 70	13×16×90	1	13×16×90
Vh 110	13×16×90	1	13×16×90
Vh 140	13×16×90	1	13×16×90
Vhs 5 – 50	5×10×60	1	5×10×60
Vhs 10 – 100	13×16×90	1	13×16×90
Vhs 10 – 125	13×16×90	1	13×16×90
Vhu 36	13×16×90	1	13×16×90
Vhu 36	5×10×60	1	5×10×60

TOOL

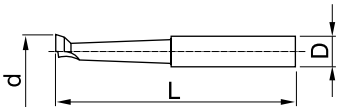

2

Accessories Vh and Vhs	Size d×D×L	Pieces	
Vh 70	5×10×60	1	5×10×60
Vh 70	13×16×90	1	13×16×90
Vh 110	13×16×90	1	13×16×90
Vh 140	13×16×90	1	13×16×90
Vhs 5 – 50	5×10×60	1	5×10×60
Vhs 10 – 100	13×16×90	1	13×16×90
Vhs 10 – 125	13×16×90	1	13×16×90
Vhu 36	13×16×90	1	13×16×90
Vhu 36	5×10×60	1	5×10×60

TOOL

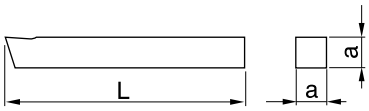

3

Accessories Vh and Vhs	Size a×a×L	Pieces	
Vhs 10 – 125	8×8×40	2	3 - 8×8×40
Vhs 10 – 125	20×20×80	1	3 - 20×20×80
Vhs 40 – 180	10×10×36	2	3 - 10×10×36
Vhu 56	8×8×30	2	3 - 8×8×30
Vhu 80	8×8×30	2	3 - 8×8×30
Vhu 110	8×8×30	2	3 - 8×8×30
Vhu 125	10×10×36	2	3 - 10×10×36
Vhu 160	10×10×36	2	3 - 10×10×36

TOOL

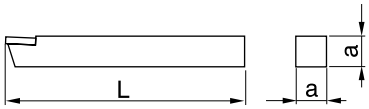

4

Accessories Vh and Vhs	Size a×a×L	Pieces	
Vhs 10 – 125	8×8×30	2	4 - 8×8×30
Vhs 40 – 180	10×10×36	2	4 - 10×10×36
Vhs 40 – 180	25×25×100	1	4 - 25×25×100
Vhu 56	8×8×30	2	4 - 8×8×30
Vhu 80	8×8×30	2	4 - 8×8×30
Vhu 110	8×8×30	2	4 - 8×8×30
Vhu 125	10×10×36	2	4 - 10×10×36
Vhu 160	10×10×36	2	4 - 10×10×36

BORING BAR

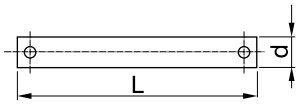

5

Accessories Vh and Vhs	Size d×L	Pieces	
Vhs 10 – 125	25×160	1	5 - 25×160
Vhs 40 – 180	32×250	1	5 - 32×250
Vhu 56, Vhu 80, Vhu 110	25×100	1	5 - 25×100
Vhu 56, Vhu 80, Vhu 110	25×160	1	5 - 25×160
Vhu 125	32×150	1	5 - 32×150
Vhu 160	32×250	1	5 - 32×250

DRŽÁK
HOLDER

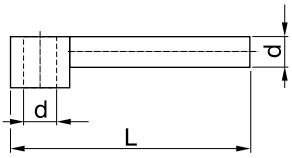

6

Accessories Vh and Vhs	Size d×L	Pieces	
Vh 70	16×56 /1**	1	6 - 16×56 / 1
Vh 70	16×56 /2**	1	6 - 16×56 / 2
Vh 110	25×115	1	6 - 25×115
Vh 140	25×135	1	6 - 25×135
Vhu 56	25×160	2	6 - 25×160
Vhu 80, Vhu 110	25×185	2	6 - 25×185
Vhu 125, Vhu 160	32×210	2	6 - 32×210

** special accessories

Accessories of boring heads Vh and Vhs

REDUCTION BUSCH

Accessories Vh and Vhs	Size D/d	Pieces	
Vh 70	16/10	1	7 - 16×10
Vh 70	25/16	1	7 - 25×16
Vh 110	25/16	1	7 - 25×16
Vhs 10 – 125	25/16	1	7 - 25×16
Vhu 36	16/10	1	7 - 16×10
Vhu 56, Vhu 80, Vhu 110	25/20	1	7 - 25×20
Vhu 56, Vhu 80, Vhu 110	25/16	1	7 - 25×16
Vhu 125, Vhu 160	32/20	1	7 - 32×20
Vhu 125, Vhu 160	32/16	1	7 - 32×16

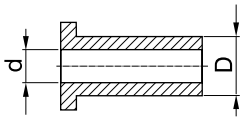

7

RIGHT HAND TOOL

Accessories Vh and Vhs	Size (k)	Pieces	
Vhu 36	16×50 S 20	1	8 - 15×50 S 20
Vhu 36	16×50 H 10	1	8 - 15×50 H 10
Vhu 56, Vhu 80, Vhu 110	25×80 S 20	1	8 - 25×80 S 20
Vhu 56, Vhu 80, Vhu 110	25×80 H 10	1	8 - 25×80 H 10
Vhu 125, Vhu 160	32×100 S 20	1	8 - 32×100 S 20
Vhu 125, Vhu 160	32×100 H 10	1	8 - 32×100 H 10

8

LEFT HAND TOOL

Accessories Vh and Vhs	Size (k)	Pieces	
Vhu 36	16×50 S 20	1	9 - 15×50 S 20
Vhu 36	16×50 H 10	1	9 - 15×50 H 10
Vhu 56, Vhu 80, Vhu 110	25×80 S 20	1	9 - 25×80 S 20
Vhu 56, Vhu 80, Vhu 110	25×80 H 10	1	9 - 25×80 H 10
Vhu 125, Vhu 160	32×100 S 20	1	9 - 32×100 S 20
Vhu 125, Vhu 160	32×100 H 10	1	9 - 32×100 H 10

9

SET OF BORING TOOLS

Wooden box	Contens	Pieces	Contens	Pieces	Contens	Pieces
d /mm/	16		25		32	
	S16C SCACL 06	1	S25F SCACL 09	1	S32H SCACL 09	1
	S16C SCBCL 06	1	S25F SCBCL 09	1	S32H SCBCL 09	1
	S16C SCACR 06	1	S25F SCACR 09	1	S32H SCACR 09	1
	S16C SCBCR 06	1	S25F SCBCR 09	1	S32H SCBCR 09	1
	S16H SCFCR 06	1	S25M SCFCR 09	1	S32Q SCFCR 09	1
	S16H SCKCR 06	1	S25M SCKCR 09	1	S32Q SCKCR 09	1
210 K	CCMT 060204E-46	10	CCMT 09T304E-47	10	CCMT 09T304E-47	10
320 K	CCMT 060204E-46	10	CCMT 09T304E-47	10	CCMT 09T304E-47	10
	US 19	12	US 13	12	US 13	12
	KL 02	1	KL 06	1	KL 06	1
A×B×C /mm/	205×165×35		260×300×45		330×230×45	
[kg]	1,05		2,80		4,95	

These sets are delivered as special accessories for the Vhu, Vhs and precision boring heads. The cutters are determined for boring and facing. The tools are delivered in wooden boxes with spare inserts locking screws and screwdriver.

Boring heads – Vhu

BORING HEADS VHU - SPECIFICATION OF ACCESSORIES IN SETS

SPECIFICATION OF ACCESSORIES IN SETS

A	B	C	D	E		TABULATION No.
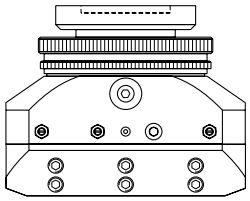	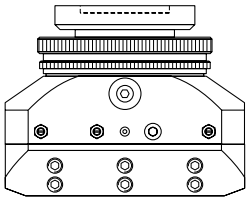	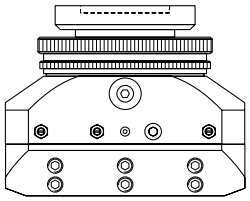	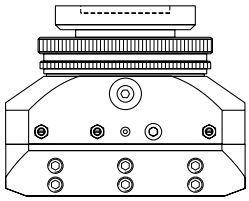	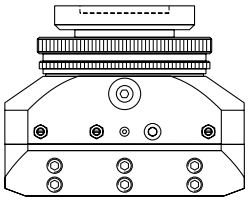		
plain boring head		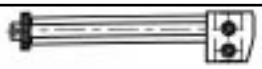		PRIMARY ACCESSORIES		201
			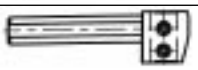			202
			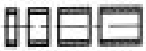			203
						204
						205
						206
	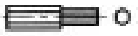					207
						208
	Boring head with primary accessories			TOOL ACCESSORIES		301
						302
						303
						304
		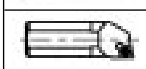	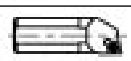			305
		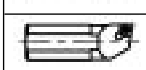				305
		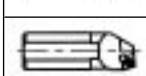	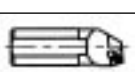			306
		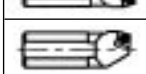	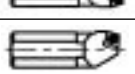			306
		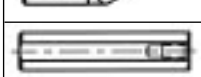	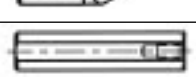			307
						308
						309
				VBD / TIPS		
PASTEBOARD PACKING	WOODEN BOX	WOODEN BOX	WOODEN BOX			

Boring heads – Vhu

BORING HEADS VHU - SPECIFICATION OF ACCESSORIES IN SETS

LIST OF ACCESSORIES	Vhu x - line number in the relevant table xx - number of pieces in the set					
	36	**56**	**80**	**110**	**125**	**160**
Holder with screw x xx	1 1 ks	2 1 ks	3 1 ks	4 1 ks	5 1 ks	6 1 ks
Holder		1 2 ks	2 2 ks	2 2 ks	3 2 ks	3 2 ks
Set of spacing tubes	1 1 sada	2 1 sada	2 1 sada	2 1 sada	3 1 sada	3 1 sada
Reduction sleeve	1 1 ks	2 1 ks	2 1 ks	2 1 ks	4+5 1 ks	4+5 1 ks
Stopping bar	1 1 ks	2 1 ks	2 1 ks	2 1 ks	3 1 ks	3 1 ks
Screwdriver with T-handle	1 1 ks	1 1 ks	1 1 ks	1 1 ks	1 1 ks	1 1 ks
Screwdriver bit	1 1 ks	1+2 1 ks	1+2 1 ks	1+2 1 ks	1+2 1 ks	1+2 1 ks
Screwdriver	1+2 1 ks	1+2 1 ks	1+2 1 ks	1+2 1 ks	1+2 1 ks	1+2 1 ks
Boring tool	1+2 1 ks	1+2 1 ks	1+2 1 ks	1+2 1 ks	2 1 ks	2 1 ks
Insert holder VBD STFOR 11	1 1 ks	1 1 ks	1 1 ks	1 1 ks	1 1 ks	1 1 ks
Insert holder VBD STFCR 11	1 1 ks	2 1 ks	2 1 ks	2 1 ks	3 1 ks	3 1 ks
Insert holder VBD STKCR 11	1 1 ks	2 1 ks	2 1 ks	2 1 ks	3 1 ks	3 1 ks
Insert holder VBD SCACL	2 1 ks	4 1 ks	4 1 ks	4 1 ks	6 1 ks	6 1 ks
Insert holder VBD SCACR	1 1 ks	3 1 ks	3 1 ks	3 1 ks	5 1 ks	5 1 ks
Insert holder VBD SCBCL	2 1 ks	4 1 ks	4 1 ks	4 1 ks	6 1 ks	6 1 ks
Insert holder VBD SCBCR	1 1 ks	3 1 ks	3 1 ks	3 1 ks	5 1 ks	5 1 ks
Insert holder bar	1 1 ks	2+3 1 ks	2+3 1 ks	2+3 1 ks	4+5 1 ks	4+5 1 ks
Back insert holder	1 1 ks	2 1 ks	2 1 ks	2 1 ks	3 1 ks	3 1 ks
Insert holder thread - recess	1 1 ks	2 1 ks	2 1 ks	2 1 ks	3 1 ks	3 1 ks
WOHLHAUPTER form 161 WTI 12 097512 1a*)	4 ks	4 ks	4 ks	4 ks	4 ks	4 ks
CCMT 060204E CCMT 09T304E UM 8016	4 ks	4 ks	4 ks	4 ks	4 ks	4 ks

CODE NAME OF THE SET

A - Single head in pasteboard packing

Vhu 36 - A / **201 207**
Vhu 56 - A / **201 214**
Vhu 80 - A / **201 221**
Vhu 110 - A / **201 238**
Vhu 125 - A / **201 245**
Vhu 160 - A / **201 252**

B - Head, primary accessories, wooden box

Vhu 36 - B / **201 269**
Vhu 56 - B / **201 276**
Vhu 80 - B / **201 283**
Vhu 110 - B / **201 290**
Vhu 125 - B / **201 306**
Vhu 160 - B / **201 313**

C - Head, primary accessories, tool accessories, wooden box

Vhu 36 - C / **201 146**
Vhu 56 - C / **201 153**
Vhu 80 - C / **201 160**
Vhu 110 - C / **201 177**
Vhu 125 - C / **201 184**
Vhu 160 - C / **201 191**

D - Head, primary and tool accessories, indexable inserts, wooden box

Vhu 36 - D / **201 085**
Vhu 56 - D / **201 092**
Vhu 80 - D / **201 108**
Vhu 110 - D / **201 115**
Vhu 125 - D / **201 122**
Vhu 160 - D / **201 139**

E - In this case, order every item separately inclusive packing

1b*) Pramet - CCMT 0602 E UM 8016

Primery Accessories Boring Heads Vhu

HOLDER WITH SCREW

Description	Dimensions /mm/ a	b	c	d	k	l	m	kg
VDS 16 - 132	27	27	30	16	20	132	13,0	0,28
VDS 25 - 195	45	46	46	25	33	195	22,5	0,95
VDS 25 - 220	45	46	46	25	33	220	22,5	1,10
VDS 25 - 244	45	46	46	25	33	244	22,5	1,18
VDS 32 - 350	50	56	56	32	39	350	22,5	2,50
VDS 32 - 383	50	56	56	32	39	383	22,5	2,75

Description	67 screw	122 screw	121 wascher	Using for	
VDS 16 - 132	M8×1–10	M6–25	6	Vhu 36	VDS 16 - 132
VDS 25 - 195	M12×1–15	M12–40	12	Vhu 56	VDS 25 - 195
VDS 25 - 220	M12×1–15	M12–40	12	Vhu 80	VDS 25 - 195
VDS 25 - 244	M12×1–15	M12–40	12	Vhu 110	VDS 25 - 244
VDS 32 - 350	M12×1–15	M12–40	12	Vhu 125	VDS 32 - 350
VDS 32 - 383	M12×1–15	M12–40	12	Vhu 160	VDS 32 - 383

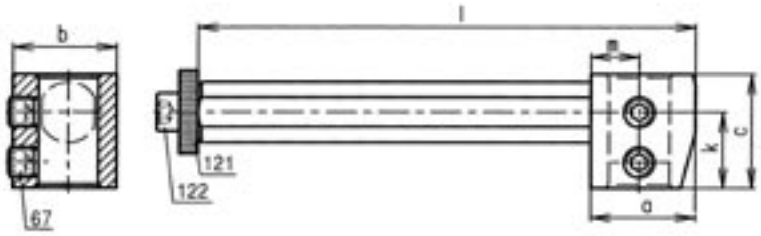

HOLDER

Description	Dimensions /mm/ a	b	c	d	k	l	m	kg
VDS 25 - 160	45	46	46	25	33	160	22,5	0,9
VDS 25 - 185	45	46	46	25	33	185	22,5	1,0
VDS 32 - 210	50	56	56	32	39	210	22,5	1,7

Description	67 screw	Using for	
VDS 25 - 160	M12x1 - 15	Vhu 56	VDS 25 - 160
VDS 25 - 185	M12x1 - 15	Vhu 80, Vhu 110	VDS 25 - 185
VDS 32 - 210	M12x1 - 15	Vhu 125, Vhu 160	VDS 32 - 210

Primery Accessories Boring Heads Vhu

SET OF SPACING TUBES

Description	pc/set	Dimensions /mm/ d	D	S1 / S2 / S3 / S4	
TRUBKA - SADA 16 SET OF SPACING TUBES 16	3	16,2	22	6 / 12 / 18	16
TRUBKA - SADA 25 SET OF SPACING TUBES 25	3	25,2	35	18 / 16 / 25	25
TRUBKA - SADA 32 SET OF SPACING TUBES 32	4	32,3	44	12 / 24 / 36 / 50	32

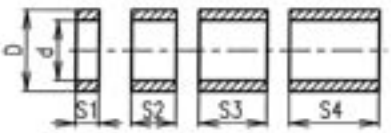

REDUCTION SLEEVE

d×D /mm/	l/b /mm/	kg	Using for		
10×16	30/5	0,03	Vhu 36	●	10×16
16×25	42/6	0,09	Vhu 56, 80, 110	●	16×25
20×25	42/6	0,06	Vhu 56, 80, 110	■	20×25
16×32	56/6	0,25	Vhu 125, 160	●	16×32
25×32	56/6	0,18	Vhu 125, 160	●	25×32
20×32	56/6	0,20	Vhu 125, 160	■	20×32

● standard ■ for demand

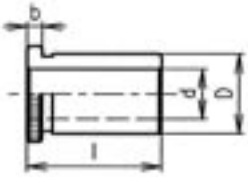

BORING TOOL - FCRK 10-NI HF

	Dimensions /mm/ D	d	L	a	kg
	16	5,5	60	30	0,05
	16	9,5	73	43	0,06

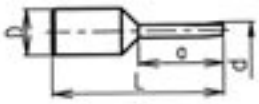

Description	From ∅	
VPS 16 - 062 FCRK 10-Ni HF 658 00550	6	VPS 16 - 062
VPS 16 - 073 FCRK 10-Ni HF 658 00550	10	VPS 16 - 073

HOLDER INSERTS - STFOR 11

Description	Dimensions /mm/ D	d	L	a	From ∅	kg	
DDS 16 - 080 STFOR 11	16	5,9	80	53	12	0,09	DDS 16 - 080 STFOR 11

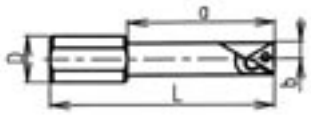

203 874 Wohlhaupter tvar 161 WTI 12 097512
203 829 Pramet TCMT 110202 E - UM 8016

US 2505 T7

HOLDER INSERTS - STFCR 11

Description	Dimensions /mm/ D	d	L		From ∅	kg	
DDS 16 - 090 STFCR 11	16	11	90		20	0,12	DDS 16 - 090 STFCR 11
DDS 25 - 150 STFCR 11	25	17	150		32	0,51	DDS 25 - 150 STFCR 11
DDS 32 - 180 STFCR 11	32	22	180		38	0,97	DDS 32 - 180 STFCR 11

203 874 Wohlhaupter 161 WTI 12 097512
203 829 Pramet TCMT 110202 E - UM 8016

US 2505 T7

HOLDER INSERTS - STKCR 11

Description	/imensions /mm/ D	d	L		From ∅	kg	
DDS 16 - 090 STKCR 11	16	11	90		20	0,12	DDS 16 - 090 STKCR 11
DDS 25 - 150 STKCR 11	25	17	150		32	0,51	DDS 25 - 150 STKCR 11
DDS 32 - 180 STKCR 11	32	22	180		38	0,97	DDS 32 - 180 STKCR 11

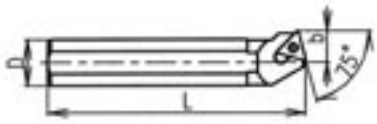

203 874 Wohlhaupter 161 WTI 12 097512
203 829 Pramet TCMT 110202 E - UM 8016

US 2505 T7

HOLDER INSERTS - SCACR/L

Description	Dimensions /mm/ D	L	f		R-right L-left	kg	
DDS 16 - 050 SCACR 06	16	50	9		R	0,06	DDS 16 - 050 SCACR 06
DDS 16 - 050 SCACL 06	16	50	9		L	0,06	DDS 16 - 050 SCACL 06
DDS 25 - 080 SCACR 09	25	80	14		R	0,25	DDS 25 - 080 SCACR 09
DDS 25 - 080 SCACL 09	25	80	14		L	0,25	DDS 25 - 080 SCACL 09
DDS 32 - 100 SCACR 09	32	100	17		R	0,53	DDS 32 - 100 SCACR 09
DDS 32 - 100 SCACL 09	32	100	17		L	0,53	DDS 32 - 100 SCACL 09

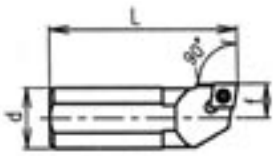

203 829 DDS 16: CCMT 060204 E - UM 8016
203 843 DDS 25, DDS 32: CCMT 09T304 E - UM 8016

DDS 16: US 2505
DS25, DDS 32: US-13 T7, T15 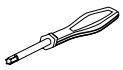

Primery Accessories Boring Heads Vhu

HOLDER INSERTS - SCBCR/L

Description	Dimensions /mm/ D	L	f	R-right L-left	kg	
DDS 16 - 050 SCBCR 06	16	50	9	R	0,06	DDS 16 - 050 SCBCR 06
DDS 16 - 050 SCBCL 06	16	50	9	L	0,06	DDS 16 - 050 SCBCL 06
DDS 25 - 080 SCBCR 09	25	80	14	R	0,25	DDS 25 - 080 SCBCR 09
DDS 25 - 080 SCBCL 09	25	80	14	L	0,25	DDS 25 - 080 SCBCR 09
DDS 32 - 100 SCBCR 09	32	100	17	R	0,53	DDS 32 - 100 SCBCR 09
DDS 32 - 100 SCBCL 09	32	100	17	L	0,53	DDS 32 - 100 SCBCL 09

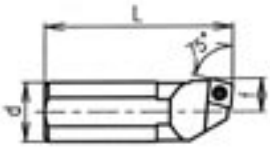

203 829 DDS 16: CCMT 060204 E - UM 8016
203 843 DDS 25, DDS 32: CCMT 09T304 E - UM 8016

DDS 16: US 2505
DS25, DDS 32: US-13

T7, T15

HOLDER BARS - VTS

Description	Dimensions /mm/ D	L	f	Using for	kg	
VTS 16 - 075 - 1,5	16	75	1,5	VHS 16, VHZ 16	0,11	VTS 16 - 075 - 1,5
VTS 25 - 085 - 1,5	25	85	1,5	VHS 25, VHZ 25	0,31	VTS 25 - 085 - 1,5
VTS 25 - 145 - 1,5	25	145	1,5	VHS 25, VHZ 25	0,51	VTS 25 - 145 - 1,5
VTS 32 - 135 - 1,5	32	135	1,5	VHS 32, VHZ 32	0,78	VTS 32 - 135 - 1,5
VTS 32 - 235 - 1,5	32	235	1,5	VHS 32, VHZ 32	1,40	VTS 32 - 235 - 1,5

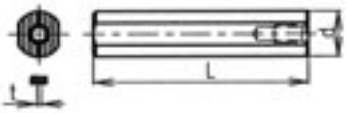

Spare parts
M6×20 07150

4 hexagon key

BACK FACE HOLDER INSERTS - STZCL 11

Description	Dimensions /mm/ a	b	c	d	e	kg	
VHS 16 -1,5 STZCL 11	14	27	15	19	11	0,02	VHS 16 -1,5 STZCL 11
VHS 25 -1,5 STZCL 11	23	35	15	23	11	0,05	VHS 25 -1,5 STZCL 11
VHS 32 -1,5 STZCL 11	29	43	15	27	11	0,08	VHS 32 -1,5 STZCL 11

203 829 Pramet TCMT 110202 E - UM 8016

US 2505

T7

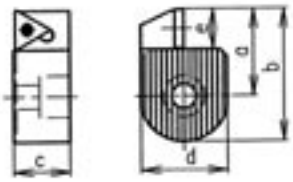

RECESS/THREAD HOLDER INSERTS - VHZ

Description	Dimensions /mm/ a	b	c	d	e	kg	
VHZ 16 -1,5 ST - R16	14	27	17	21,5	14,5	0,02	VHZ 16 -1,5 ST - R16
VHZ 25 -1,5 ST - R16	23	31,5	17	19,5	14,5	0,05	VHZ 25 -1,5 ST - R16
VHZ 32 -1,5 ST - R16	29	36	17	21,5	14,5	0,08	VHZ 32 -1,5 ST - R16

VBD Pramet
TN 16 NR - *** ZZ
*** A = recess width
A : 1,10; 1,60; 2,15;
1,13; 1,85; 2,65

TN 16 NR *** M - mmetric threads
*** s ´= pitch of thread
s: 0,50; 1,00; 1,50; 2,00; 3,00;
0,75; 1,25; 1,75; 2,50

US 53

T15

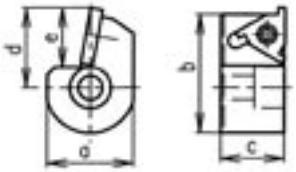

Exchaneable taper shanks

EXCHANGEABLE TAPER SHANKS

1 DIN228A, ISO 296-63, ČSN 220420

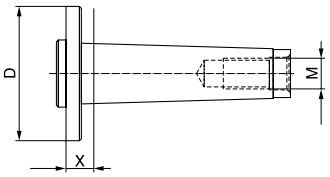

2 DIN 1806, ISO 296-63, ČSN 220424

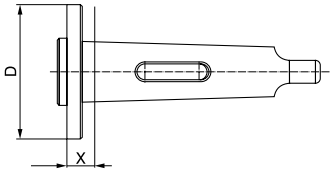

3 SPECIAL *

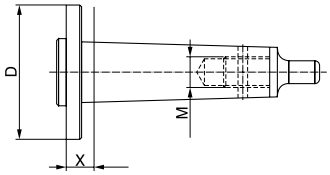

4 DIN2080, ISO 297, ČSN 220430

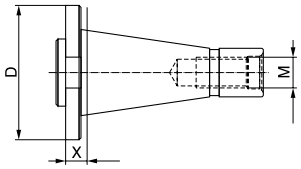

5 DIN 69871/A, ISO 297, ČSN 220434

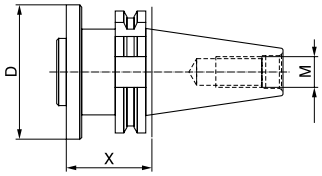

6 MAS - BT

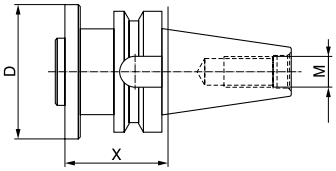

7 R8

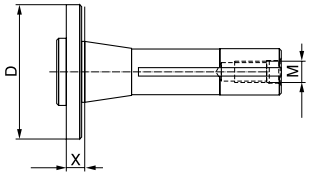

VK Type	Popis Description	D /mm/	X /mm/	kg	Vhu 36	Vhu 56	Vhu 80	Vhu 110	Vhu 125	Vhu 160	Vh 70	Vh 110	Vh 140	Svn 380A	■	
VK 360	MK2-M8 DIN 228A	70	13	0,35	●						●				1	.71 MK2-M8 /208.015/
VK 360	MK2-M10 DIN 228A	70	13	0,35	●						●				1	.71 MK2-M10 /208.022/
VK 360	MK2-3/8"-16 UNC	70	13	0,35	●						●				1	.71 MK2-3/8-16UNC /208.039/
VK 360	MK3-M10 DIN 228A	70	13	0,46	●						●				1	.71 MK3-M10 /208.060/
VK 360	MK3-M12 DIN 228A	70	13	0,46	●						●				1	.71 MK3-M12 /208.077/
VK 360	MK3-1/2"-12 UNC	70	13	0,46	●						●				1	.71 MK3-1/2-12UNC /208.084/
VK 360	MK4-M14 DIN 228A	70	14,5	0,75	●						●				1	.71 MK4-M14 /208.121/
VK 360	MK4-M16 DIN 228A	70	14,5	0,75	●						●				1	.71 MK4-M16 /208.138/
VK 360	MK4-5/8"-11 UNC	70	14,5	0,75	●						●				1	.71 MK4-5/8-11UNC /208.145/
VK 801	MK4-M14 DIN 228A	110	18,5	1,35		●	●	●				●	●		1	.71 MK4-M14 /208.510/
VK 801	MK4-M16 DIN 228A	110	18,5	1,35		●	●	●				●	●		1	.71 MK4-M16 /208.527/
VK 801	MK4-5/8"-11 UNC	110	18,5	1,35		●	●	●				●	●		1	.71 MK4-5/8-11UNC /208.534/
VK 801	MK5-M16 DIN 228A	110	18,5	2,29		●	●	●	●	●		●	●	●	1	.71 MK5-M16 /208.572/
VK 801	MK5-M20 DIN 228A	110	18,5	2,29		●	●	●	●	●		●	●	●	1	.71 MK5-M20 /208.589/
VK 801	MK5-3/4"-10 UNC	110	18,5	2,29		●	●	●	●	●		●	●	●	1	.71 MK5-3/4-10UNC /208.596/
VK 801	MK6-M20 DIN 228A	110	20	4,74		●	●	●	●	●		●	●	●	1	.71 MK6-M20 /208.633/
VK 801	MK6-M24 DIN 228A	110	20	4,74		●	●	●	●	●		●	●	●	1	.71 MK6-M24 /208.640/
VK 801	MK6-1"-8 UNC	110	20	4,74		●	●	●	●	●		●	●	●	1	.71 MK6-1/8UNC /208.664/
VK 360	MK3-DIN 1806	70	13	0,47	●						●				2	.72 MK3 DIN 1806 /208.053/
VK 360	MK4-DIN 1806	70	14,5	0,77	●						●				2	.72 MK4 DIN 1806 /208.114/
VK 360	MK5-DIN 1806	70	14,5	1,5	●						●				2	.72 MK5 DIN 1806 /208.164/
VK 360	MK6-DIN 1806	70	38	4,16	●						●				2	.72 MK6 DIN 1806 /208.176/
VK 801	MK4-DIN 1806	110	18,5	1,47		●	●	●				●	●		2	.72 MK4 DIN 1806 /208.503/
VK 801	MK5-DIN 1806	110	18,5	2,45		●	●	●	●	●		●	●	●	2	.72 MK5 DIN 1806 /208.565/
VK 801	MK6-DIN 1806	110	20	4,54		●	●	●	●	●		●	●	●	2	.72 MK6 DIN 1806 /208.015/
VK 360	MK2-(3/8"-16 UNC) *	70	13	0,36	●						●				3	.73 MK2-3/8-16UNC /208.046/
VK 360	MK3-(M12) *	70	13	0,47	●						●				3	.73 MK3-M12 /208.091/
VK 360	MK3-(1/2"-12 UNC) *	70	13	0,47	●						●				3	.73 MK3-1/2-12 UNC /208.107/
VK 360	MK4-(5/8"-11 UNC) *	70	14,5	0,75	●						●				3	.73 MK4-5/8-11 UNC /208.152/
VK 801	MK4-(M16) *	110	18,5	1,46		●	●	●				●	●		3	.73 MK4-M16 /208.541/
VK 801	MK4-(5/8"-12 UNC) *	110	18,5	1,46		●	●	●				●	●		3	.73 MK4- 5/8-12UNC /208.558/
VK 801	MK5-(M20) *	110	18,5	2,22		●	●	●	●	●		●	●	●	3	.73 MK5-M20 /208.602/
VK 801	MK5-(3/4"-10 UNC) *	110	18,5	2,22		●	●	●	●	●		●	●	●	3	.73 MK5-3/4-10UNC /208.619/
VK 801	MK6-(M24) *	110	20	4,53		●	●	●	●	●		●	●	●	3	.73 MK6-M24 /208.671/
VK 801	MK6-(1"-8 UNC) *	110	20	4,53		●	●	●	●	●		●	●	●	3	.73 MK6-1-8UNC /208.688/
VK 360	ISO 30 (M12) DIN 2080	70	9,6	0,4	●						●				4	.71 ISO 30 /208.183/
VK 360	ISO 30 (1/2"-13 UNC)	70	9,6	0,4	●						●				4	.71 ISO 30 1/2-13UNC /208.190/
VK 360	ISO 40 (M16) DIN 2080	70	9,6	0,74	●						●				4	.71 ISO 40 /208.213/
VK 360	ISO 40 (5/8"-11 UNC)	70	9,6	0,74	●						●				4	.71 ISO 40 5/8-11UNC /208.220/
VK 360	ISO 50 (M24) DIN 2080 CAT	70	45,2	3,19	●						●				4	.71 ISO 50 /208.244/
VK 801	ISO 40-(M16) DIN 2080	110	13,6	1,35		●	●	●	●	●		●	●	●	4	.71 ISO 40 /208.695/
VK 801	ISO 40-(5/8"-11 UNC)	110	13,6	1,35		●	●	●	●	●		●	●	●	4	.71 ISO 40-5/8-11UNC /208.701/
VK 801	ISO 50-(M24) DIN 2080	110	15,2	2,89		●	●	●	●	●		●	●	●	4	.71 ISO 50 /208.725/
VK 801	ISO 50-(1"-8 UNC)	110	15,2	2,89		●	●	●	●	●		●	●	●	4	.71 ISO 50-1-8UNC /208.732
VK 360	ISO 30 (M12) DIN 69871/A	70	49,1	0,75	●						●				5	.71 ISO 30 /208.206/
VK 360	CAT 30 (1/2"-13 UNC)	70	44,2	0,75	●						●				5	.71 CAT 30 /208.282/
VK 360	ISO 40 (M16) DIN 69871/A	70	49,1	1,35	●						●				5	.71 ISO 40-M16 /208.237/
VK 360	CAT 40 (5/8"-11 UNC)	70	49,1	1,35	●						●				5	.71 CAT 40 /208.299/
VK 360	ISO 50 (M24) DIN 69871/A R8	70	49,1	3,05	●						●				5	.71 ISO 50 /208.251/
VK 801	ISO 40-(M16) DIN 69871/A	110	48,1	1,95		●	●	●	●	●		●	●	●	5	.71 ISO 40-M16 /208.718/
VK 801	CAT 40-(5/8"-11 UNC)	110	48,1	1,95		●	●	●	●	●		●	●	●	5	.71 CAT 40 /208.770/
VK 801	ISO 50-(M24) DIN 69871/A	110	65,1	4,78		●	●	●	●	●		●	●	●	5	.71 ISO 50-M24 /208.749/
VK 801	CAT 50-(1"-8 UNC)	110	65,1	4,78		●	●	●	●	●		●	●	●	5	.71 CAT 50 /208.787/
VK 360	MAS-BT30 (M12)	70	34,6	0,70	●						●				6	.71 BT 30 /208.268/
VK 360	MAS-BT40 (M16)	70	57,0	1,55	●						●				6	.71 BT 40-M16 /208.275/
VK 801	MAS-BT40 (M16)	110	43,6	2,12		●	●	●	●	●		●	●	●	6	.71 BT 40-M16 /208.756/
VK 801	MAS-BT50 (M24)	110	84,0	5,70		●	●	●	●	●		●	●	●	6	.71 BT 50-M24 /208.763/
VK 360	R8 (7/16"-20 UNF)	70	17,6	0,69	●						●				7	.74 R8 /208.305/
VK 800	R8 (7/16"-20 UNF)	63	17,6	0,64		●									7	.74 R8 /208.817/

* sspecial

VK 360 determined for Vhu 36 a / and Vh 70
VK 801 determined for Vhu 56, 80, 110, 125, 160 a Vh 110, 140

Modular boring system

	Order No.	Range	⚖	Trn Arbor	Norm	
SVn 90	206.011	105÷160	6,1	ISO 40×40×90	DIN 2080	SVn 90
SVn 380	206.028	150÷380	22,8	ISO 50×40×90	DIN 69871/A	SVn 380
SVn 600	206.035	370÷600	32,3	ISO 50×60×130	DIN 220432	SVn 600
SVn 90A	206.011A	105÷160	6,9	VK 801, MK 5, MK 6	DIN 228A, DIN 1806	SVn 90A
SVn 380A	206.028A	150÷380	25,7	VK 801, MK 5, MK 6	DIN 228A, DIN 1806	SVn 380A
SVn 600A	206.035A	370÷600	35,2	VK 801, MK 5, MK 6	DIN 228A, DIN 1806	SVn 600A

MODULAR BORING SYSTEM

ASSEMBLY VARIATIONS

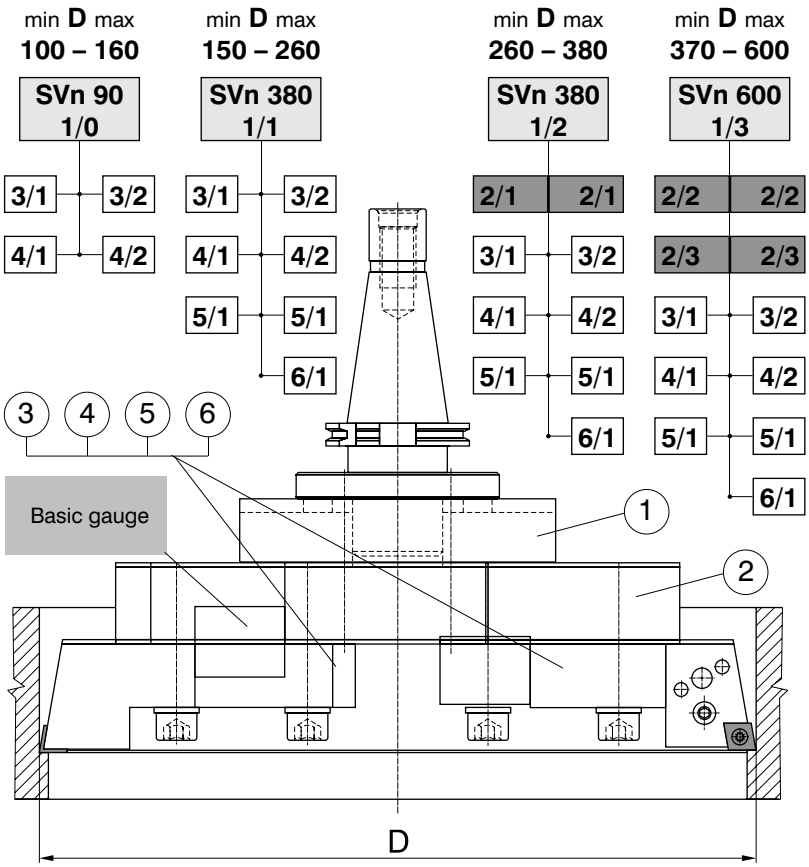

Těleso–Body (1)

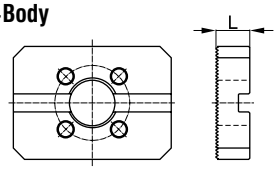

	L [mm]		L [mm]
1/0	65	1/2	30
1/1	60	1/3	35

Adaptors for milling cutters

size ISO 40×40×90 pro SVn 380 DIN 6357/A // PN 247228.1
ISO 50×40×90 pro SVn 600 DIN 6357/B // PN 247228
ISO 50×40×130 pro SVn 600 ---------- // PN 241425

Rameno–Extension arm (2)

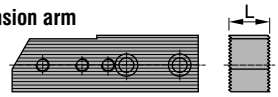

	L [mm]	Range
2/1	36	260 – 380
2/2	50	370 – 490
2/3	50	480 – 600

Internal tool (3)

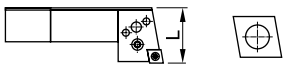

	L [mm]		
3/1	47	CCMT120408 E	S 20
3/2	48		

Internal tool (4)

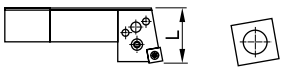

	L [mm]		
4/1	47	SCMT120408 E	S 20
4/2	48		

–External tool (5)

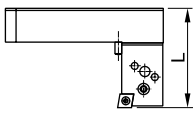

	L [mm]		
5/1	70	CCMT120408 E	S 20

Finishing tool (6)

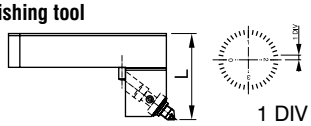

1 DIV = 0,02 mm/∅

	L [mm]		
6/1	88	CCMT060202	S 20

Spindle speed devices

SPINDLE SPEED DEVICE
— MANUAL TOOL CHANGE

Order No.	Taper	Norm	Workmanship	L /mm/	kg		
242.088	ISO 40	DIN 2080, ISO 297, ČSN 220430	1	145	6,6	■	ISO 40 /242.088/
242.095	ISO 50	DIN 2080, ISO 297, ČSN 220430	1	149	8,4	■	ISO 50 /242.095/
242.019	Mk4	DIN 1806, ISO 296-63, ČSN 220430	2	143	6,5	□	Mk4 /242.019/
242.026	Mk5	DIN 1806, ISO 296-63, ČSN 220430	2	140	7,4	□	Mk5 /242.026/
242.033	Mk6	DIN 1806, ISO 296-63, ČSN 220430	2	142	10,0	□	Mk6 /242.033/
242.040	Mk4×M16	DIN 2270, ČSN 220422	3	164	6,6	□	Mk4 /242.040/
242.057	Mk5×M20	DIN 2270, ČSN 220422	3	168	7,8	□	Mk5 /242.057/
242.064	Mk6×M24	DIN 2270, ČSN 220422	3	177	12,0	□	Mk6 /242.064/

■ basic offer □ by request

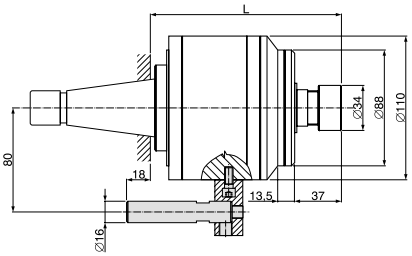

1

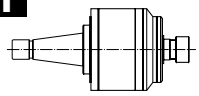

2

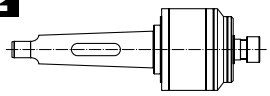

3

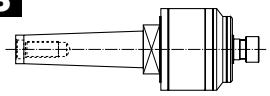

BASIC TECHNICAL DATA

Gear ratio	6 : 1
Spindle Speed	max. 20 000 min^{-1}/rpm
Power	max. 8,4 kW
Tool diameter	d=1÷13 mm
Collet	ER20/ESX DIN 6499-B

Basic information

- mechanical planetary gearing to higher speeds
- unchangeable taper shank
- clamping of tools with straight shank
- long life grease filling

Application

- as a special accessories for milling-, boring-, drilling-, NC- and CNC- machines
- for precise and productive milling and boring with high cutting speeds

Multiplicator of machine tool spindle speed

SPINDLE SPEED DEVICE
— FOR AUTOMATIC TOOL CHANGE

Order No.	Taper	Norm	Cooling	L /mm/	kg	A /mm/	d1 /mm/	p /bar/		
242.118	ISO 40	DIN 69871, ČSN 220434	A, AD+B	193	8,4	65	18	0,2	■	ISO 40/242.118/XX
242.125	ISO 50	DIN 69871, ČSN 220434	A, AD+B	191	10,7	80/110	18	0,2	■	ISO 50/242.125/XX
242.224	ISO 40	ČSN 220432	A, AD	186	8,6	65	18	0,2	□	ISO 40/242.224/XX
242.231	ISO 50	ČSN 220432	A, AD	182	10,4	80/110	18	0,2	□	ISO 50/242.231/XX
242.194	CAT 40		A	193	8,4	62÷110	14÷18		□	CAT 40/242.194/XX
242.200	CAT 50		A	191	10,7	62÷110	14÷18		□	CAT 50/242.200/XX
242.163	MAS BT-40		A	186	8,6	62÷110	14÷18		□	BT-40/242./163/XX
242.170	MAS BT-50		A	194	11,5	62÷110	14÷18		□	BT-50/242.170/XX

■ basic offer □ by request
XX specify the type of necessary cooling

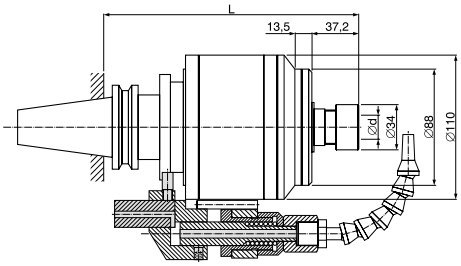

■ Typ, Type **A**

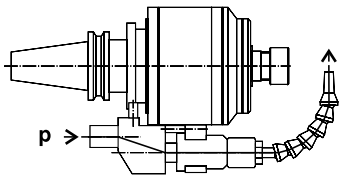

□ Typ, Type **AD**

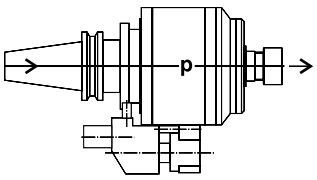

□ Typ, Type **B**

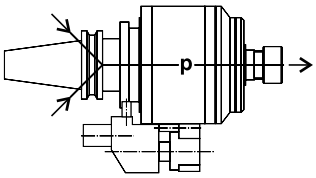

BASIC TECHNICAL DATA

Gear ratio	6 : 1
Spindle Speed	max. 20 000 min^{-1}/rpm
Power	max. 8,4 kW
Tool diameter	d=1÷13 mm
Collet	ER20/ESX DIN 6499-B

Spindle speed devices

ARRESTING DEVICE

K - rotationally adjustable ring

49 - longitudinally adjustable pin

In the order it is necessary to specify the parameters A, d1.

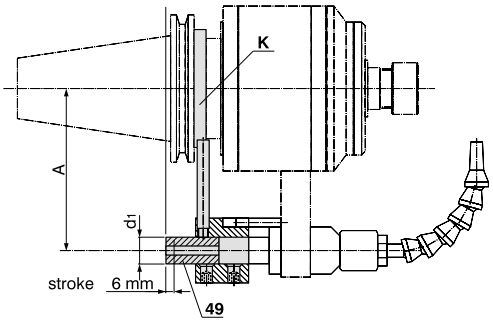

ACCURACY OF TOOL CLAMPING

d /mm/ MIN.	d /mm/ MAX.	L_1 /mm/	MAX ↗ /mm/ ER 20
1,0	1,6	4,0	0,02
1,6	3,0	7,5	0,02
3,0	6,0	15,0	0,02
6,0	10,0	25,0	0,02
10,0	13,0	32,0	0,025

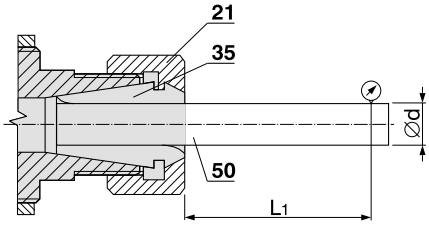

21 - nut
35 - collet
50 - measuring pin

COLLETS ER 20

Order No.	Range	
281.803	1,0÷0,5	1,0-0,5 /281.803/
281.810	1,5÷1,0	1,5-1,0 /281.810/
281.827	2,0÷1,5	2,0-1,5 /281.827/
281.834	2,5÷2,0	2,5-2,0 /281.834/
281.841	3,0÷2,5	3,0-2,5 /281.841/
281.858	3,5÷3,0	3,5-3,0 /281.858/
281.856	4,0÷3,5	4,0-3,5 /281.856/
281.872	5,0÷4,0	5,0-4,0 /281.872/
281.889	6,0÷5,0	6,0-5,0 /281.889/
281.896	7,0÷6,0	7,0-6,0 /281.896/
281.902	8,0÷7,0	8,0-7,0 /281.902/
281.919	9,0÷8,0	9,0-8,0 /281.919/
281.926	10,0÷9,0	10,0-9,0 /281.926/
281.520	11,0÷10,0	11,0-10,0 /281.520/
281.537	12,0÷11,0	12,0-11,0 /281.537/
281.544	13,0÷12,0	13,0-12,0 /281.544/

Precision boring tool

PRECISION BORING TOOL ABH

Order Number	Connection d1	Boring range	kg	
900.001	25 WELDON DIN 1835	6 - 100 mm	0,80	6-100 /900.001/

ACCESSORIES - BORING TOOLS

Order Number	Boring range A	Typ	X1	L1	L2	r1	kg	
900.003	6 - 14	A	39	59	31	2,75	0,05	6-14 /900.003/
900.004	10 - 18	B	53	73	50	4,9	0,05	10-18 /900.004/
900.005	18 - 26	C	60	80	-	9,4	0,09	18-26 /900.005/

TYP A

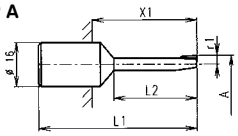

TYP B

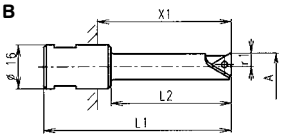

TYP C

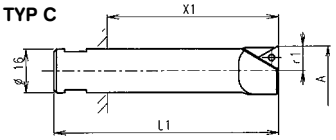

ACCESSORIES - HOLDERS OF KNIFES HEAD

Order Number	d1	X1	L1	kg	
900.006	24	59	79	0,11	24 /900.006/
900.007	24	68	88	0,12	24 /900.007/

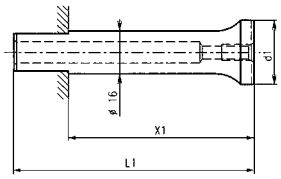

ACCESSORIES - INSERT HOLDERS WITH 95° APPROACH ANGLE

Order Number	Boring range A	Typ	X1	L1	r1	kg	
900.008	26 - 40	A	70	90	11	0,03	26-40 /900.008/
900.008	26 - 40	A	90	110	11	0,03	26-40 /900.008/
900.009	40 - 60	B	70	90	20	0,05	40-60 /900.009/
900.009	40 - 60	B	90	110	20	0,05	40-60 /900.009/

TYP A

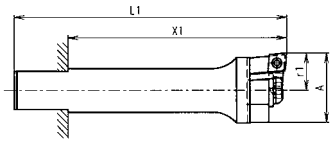

TYP B

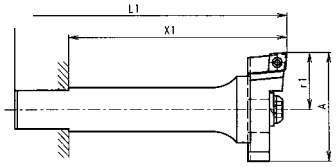

ACCESSORIES - INSERT HOLDERS WITH 95° APPROACH ANGLE

Order Number	Boring range A	Typ	X1	X2	kg	
900.10	60 - 80	A	50,5	72,5	0,1	60-80 /900.010/
900.11	80 - 100	B	50,5	74,5	0,17	80-100 /900.011/

TYP A

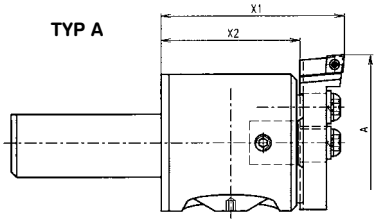

TYP B

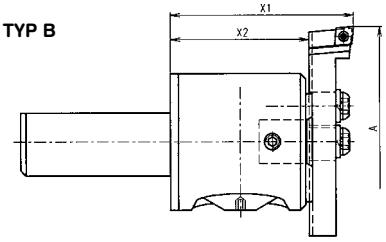

Angle head - model PVI

Gear ratio	Max. speed	Max. kr. moment Mk Nm Max.	Pover input (Max. speed)	Rotation
1 : 1	4 000 ot.min^{-1}	15 Nm	5 kW	opposible

ANGLE HEAD
- MODEL PVI (PIVOTING HEAD)

Max. Tapping size	Tool diameter	Collet	Accuracy of tool clamping
M 12	2 - 16 mm	ER 25 DIN 6499-B	0,02

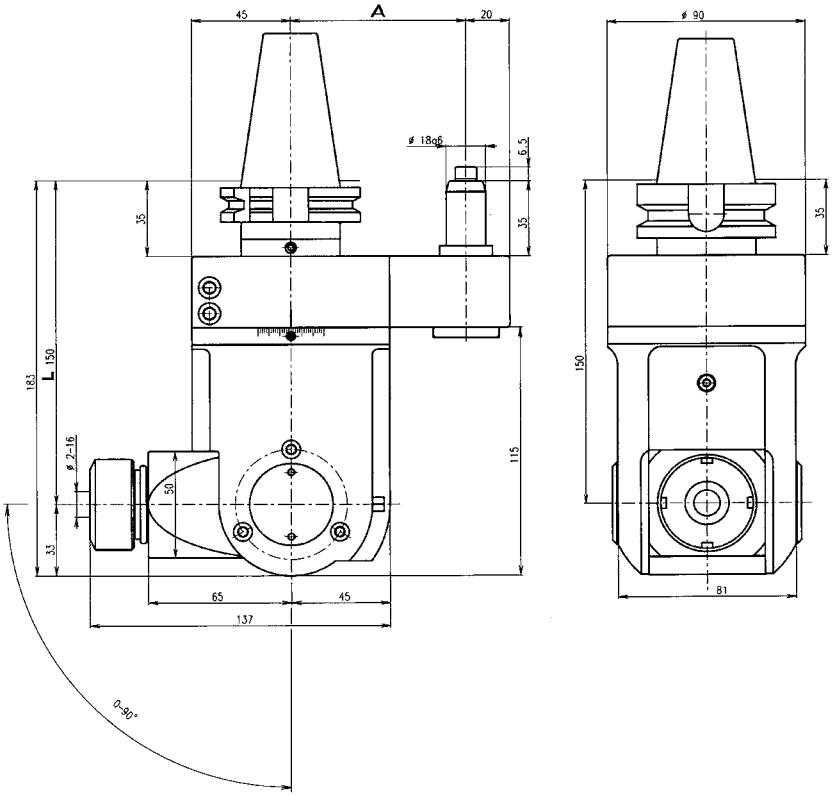

Code	Type	Drive Taper	A[1] /mm/	(A)[2] /mm/	L /mm/	kg	
253-025	PVI ER 25	ISO 40 DIN 69871 A	DAF 65	(DAF 80)	150	6,65	40 DIN 68971
253-015	PVI ER 25	CAT 40	DAF 65	(DAF 80)	150	6,65	CAT 40
253-039	PVI ER 25	BT 40	DAF 65	(DAF 80)	150	6,85	BT 40
253-046	PVI ER 25	ISO 40 DIN 2080	DAF 65	(DAF 80)	150	6,55	40 DIN 2080
253-053	PVI ER 25	ISO 50 DIN 69871 A	DAF 80	(DAF 110)	150	8,95	50 DIN 68971
253-060	PVI ER 25	CAT 50	DAF 80	(DAF 110)	160	8,95	CAT 50
253-077	PVI ER 25	BT 50	DAF 80	(DAF 110)	150	9,15	BT 50
253-084	PVI ER 25	ISO 50 DIN 2080	DAF 80	(DAF 110)	150	8,75	50 DIN 2080
253-091	PVI ER 25	HSK63 A DIN 69893	-	-	-		HSK 63

1) standard execution
2) Non-standard

The angle heads **FUH** represents substantial increase of producttivy of production due to its operation possibilities:

- applicable on CNC machines and conventional machines
- time saving when handling with workpiece
- machining from more sides in one satting
- possibility to work in automatic cycle
- reduction of positioning of the workpiece - more precision machining

The angle heads are used for:

- milling
- drilling
- thread cuttingon CNC machines with thread cutting system

Angle head - model FXI

ANGLE HEAD
- MODEL FXI (FIXED HEAD)

Gear ratio	Max. speed	Max. kr. moment Mk Nm Max.	Pover input (Max. speed)	Rotation
1 : 1	4 000 ot.min^{-1}	18 Nm	6,5 kW	same

Max. Tapping size	Tool diameter	Collet	Accuracy of tool clamping
M 12	2 - 16 mm	ER 25 DIN 6499-B	0,02

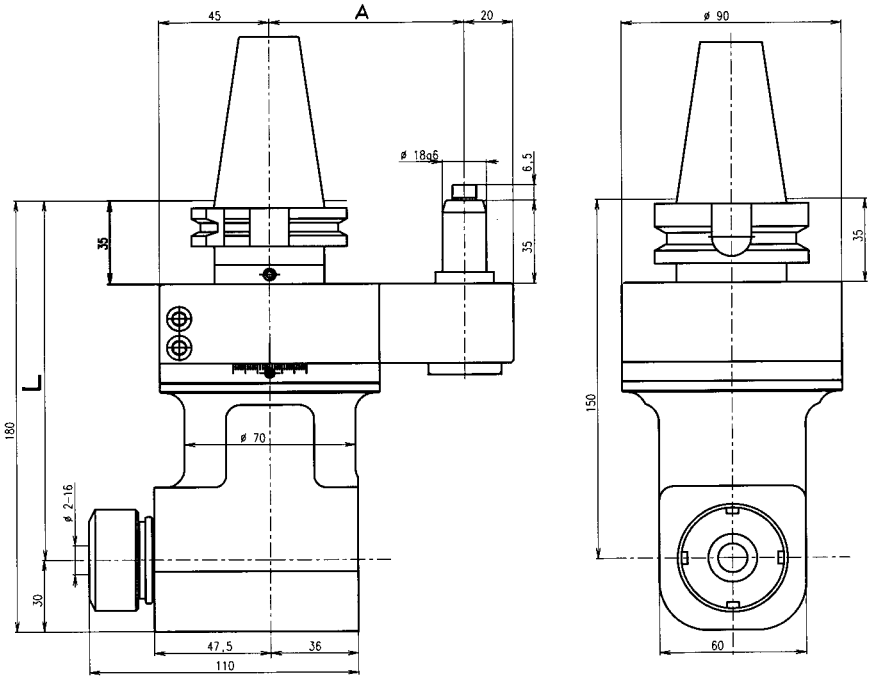

Code	Type	Drive Taper	A[1] /mm/	(A)[2] /mm/	L /mm/	kg	
255-026	FXI ER 25	ISO 40 DIN 69871 A	DAF 65	(DAF 80)	150	5,7	40 DIN 68971
255-019	FXI ER 25	CAT 40	DAF 65	(DAF 80)	150	5,7	CAT 40
255-033	FXI ER 25	BT 40	DAF 65	(DAF 80)	150	5,9	BT 40
255-040	FXI ER 25	ISO 40 DIN 2080	DAF 65	(DAF 80)	150	5,6	40 DIN 2080
255-057	FXI ER 25	ISO 50 DIN 69871 A	DAF 80	(DAF 110)	150	8,1	50 DIN 68971
255-064	FXI ER 25	CAT 50	DAF 80	(DAF 110)	160	8,1	CAT 50
255-071	FXI ER 25	BT 50	DAF 80	(DAF 110)	150	8,2	BT 50
255-088	FXII ER 25	ISO 50 DIN 2080	DAF 80	(DAF 110)	150	7,9	50 DIN 2080
255-095	FXI ER 25	HSK63A DIN 69893	-	-	-		HSK 65

1) standard execution
2) Non-standard

The angle heads **FUH** represents substantial increase of producttivy of production due to its operation possibilities:

- applicable on CNC machines and conventional machines
- time saving when handling with workpiece
- machining from more sides in one satting
- possibility to work in automatic cycle
- reduction of positioning of the workpiece - more precision machining

The angle heads are used for:

- milling
- drilling
- thread cuttingon CNC machines with thread cutting system

Chucks – Technical information

TECHNICAL INFORMATION

Chucks are delivered in workmanship with 2, 3, 4 and 6 jaws in two class accuracy. Higher accuracy (SUPERIOR) and as standard (I.). The workmanship SUPERIOR is on class higher as is described DIN 6386 or ISO 3089.

For clamping to the spindle or intermediate flange have the chuck from the backside a cylindrical beveled chamfer:

- workmanship M1 (clamping from backside of the chuck with screws)
- workmanship M2 (clamping from backside of the chuck with screws, also from the face of the chucks, or clamping on spindle with a short taper)
- workmanship A (clamping with screws in accordance with DIN 55026, ISO 702/I, ČSN 201006)
- workmanship B (clamping with thread pins in accordance with DIN 55027, ISO 702/III, ČSN 201011)
- workmanship C (clamping with screws camlock in accordance with DIN 55029, ISO 702/II, ČSN 201018)
- workmanship D (clamping with screws camlock workmanshiped with Whitworth thread in accordance ISO 702/II).

Together with the chuck are delivered also all clamping elements in accordance to the workmanship.

SCROLL CHUCK SYSTEM

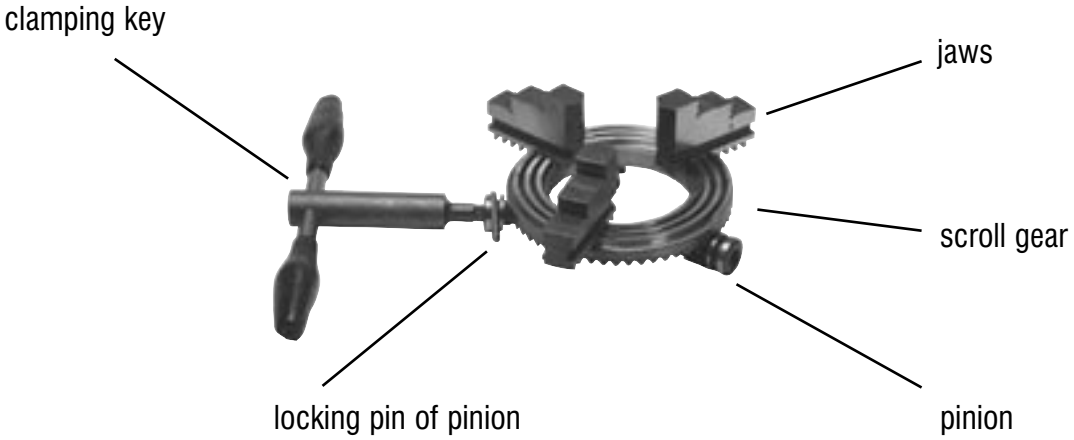

Chucks – technical information

GEOMETRICAL ACCURACY

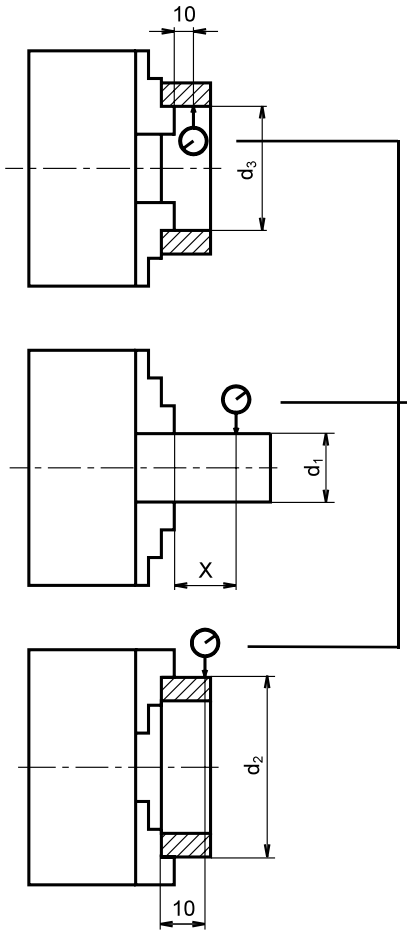

Size ∅	TOS SUPERIOR	TOS I.	
		DIN 6386 I.	DIN 6386 II.
80	0,02	0,04	0,075
120	0,02	0,04	0,075
125	0,025	0,04	0,075
160	0,025	0,04	0,075
200	0,03	0,06	0,075
250	0,03	0,06	0,1
315	0,04	0,08	0,1
400	0,04	0,08	0,1
500	0,08	0,10	0,12

Size ∅	TOS SUPERIOR	TOS I.	
		DIN 6386 I.	DIN 6386 II.
80	0,01	0,02	0,04
120	0,01	0,02	0,04
125	0,015	0,03	0,04
160	0,015	0,03	0,04
200	0,015	0,03	0,04
250	0,015	0,03	0,07
315	0,02	0,04	0,07
400	0,02	0,04	0,07
500	0,04	0,05	0,1

Size ∅	
80	0,03
120	0,03
125	0,03
160	0,04
200	0,04
250	0,04
315	0,06
400	0,06
500	0,07

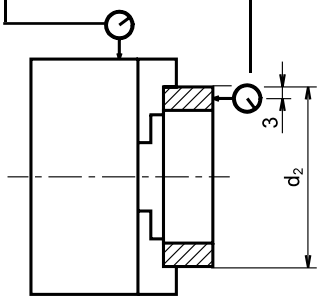

Size ∅	X	d_1 I.	d_1	d_1	d_2	d_3
80	40	8	12	16	63	32
120	40	12	16	20	80	40
125	60	16	20	25	100	50
160	60	20	36	40	125	80
200	80	25	36	47	160	100
250	80	36	47	75	200	125
315	120	47	75	100	250	160
400	120	47	87	125	315	200
500	160	75	125	160	400	200

Size ∅	Max. 1) /min^{-1}/	Max. 2) /min^{-1}/	9) /gcm/	
80	6000	7000	1	1
100	5300	6300	3	2
125	4500	5500	5	4
160	3500	4500	11	8
200	3000	4000	25	19
250	2800	3500	45	35
315	1800	2500	133	90
400	1300	2000	330	208
500	1100	1500	720	504

1) maximum speed for chuck type IUS, IUR, IUY, IUT, IUD, IUM

2) maximum speedfor chuck type IUG, IUH, IUGO, IUHO, IUGG, IUHG, IUGS, IUHS

9) admissible unbalance

CODE

IUS 200 / 3 - 1 - M1 243801.0 203110

- 243801.0 203110 — Catalogue number
- M1 — Type and size of ending of chuck for the clamping on intermediale flange or spindle /M1, M2, A, B, C, D/
- 1 — Class of acuracy
  1 = SUPERIOR
  2 = I.
- Standard ČSN
- 3 — Number of jaws
- 200 — Size of chucks
- IUS — Type of product

Chucks – technical information

CLAMPING CAPACITY

For 3 and 4-jaws chucks IUS, IUR, IUZ, IUT

∅	E /mm/	F /mm/	G /mm/	H /mm/	J /mm/	K /mm/	L /mm/
80	3÷27		23÷48	48÷73			3÷27
100	3÷39	3÷45	24÷60	58÷94	25÷67	60÷102	3÷39
125	3÷49	3÷47	30÷75	70÷116	28÷74	69÷115	3÷49
160	3÷76	3÷76	46÷119	87÷160	35÷108	91÷166	3÷76
200	5÷88	5÷83	56÷140	116÷200	46÷125	105÷185	5÷88
250	5÷107	5÷125	68÷162	156÷250	60÷183	124÷247	5÷107
315	8÷136	8÷131	74÷201	188÷315	65÷193	145÷273	8÷131
400	10÷187	10÷187	90÷268	223÷400	105÷282	173÷350	10÷187
500	25÷250	25÷250	135÷360	275÷500	135÷411	201÷477	25÷250

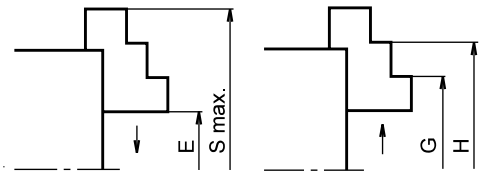

∅	N /mm/	O /mm/	P /mm/	R /mm/	S max. /mm/	T max. /mm/
80	27÷51	52÷76			98	
100	30÷66	64÷100	42÷72	77÷107	122	130
125	38÷84	83÷125	50÷95	90÷136	152	163
160	50÷123	91÷164	51÷128	109÷185	208	218
200	57÷140	117÷200	69÷148	127÷207	246	254
250	66÷168	154÷256	83÷206	147÷270	314	328
315	79÷207	193÷321	99÷225	174÷305	392	382
400	92÷274	224÷406	118÷290	189÷358	498	454
500	135÷360	275÷500	125÷447	191÷513	626	579

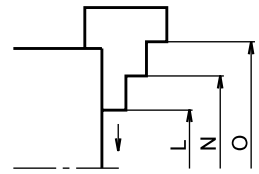

For 6-jaws chucks IUS, IUR, IUZ, IUT

∅	E /mm/	F /mm/	G /mm/	H /mm/	J /mm/	K /mm/	L /mm/
125	3÷43	3÷41	30÷69	70÷110	28÷68	69÷109	3÷43
160	3÷70	3÷70	46÷113	87÷154	35÷102	91÷160	3÷70
200	5÷80	5÷75	56÷132	116÷192	46÷117	105÷177	5÷80
250	5÷99	5÷117	68÷154	156÷242	60÷185	124÷237	5÷99
315	8÷126	8÷121	74÷191	188÷305	65÷183	145÷263	8÷121
400	10÷175	10÷175	90÷256	223÷388	105÷270	173÷338	10÷175
500	25÷238	25÷238	135÷348	275÷488	135÷399	201÷465	25÷238

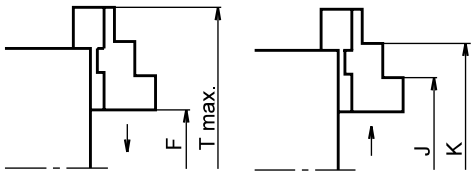

∅	N /mm/	O /mm/	P /mm/	R /mm/	S max. /mm/	T max. /mm/
125	38÷78	83÷119	50÷89	90÷130	146	157
160	50÷117	91÷158	51÷122	109÷179	202	212
200	57÷132	109÷200	69÷140	127÷199	238	246
250	66÷160	154÷248	83÷198	147÷262	306	320
315	79÷197	193÷311	99÷215	179÷295	372	372
400	95÷262	224÷394	118÷278	189÷346	486	442
500	135÷348	275÷488	125÷435	191÷501	614	567

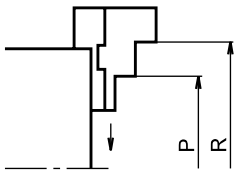

For jaws chucks IUD, IUM

∅	E max. /mm/	F max. /mm/
100	129	29
125	160	40
160	216	66
200	269	79
250	333	93
315	407	127
400	498	188
500	626	252

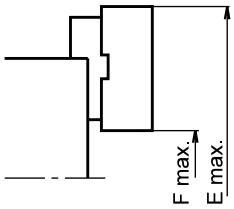

For solid soft jaw MC and for top soft jaw NM

∅	E max. /mm/	F max. /mm/	G max. /mm/	H max. /mm/
80	98	24		
100	122	36	133	31
125	152	46	167	39
160	208	72	208	54
200	246	84	254	78
250	314	104	331	119
315	392	144	373	125
400	498	192	459	181
500	626	256	584	240

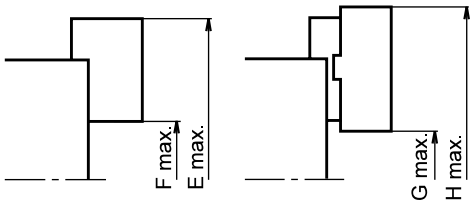

Self-centring Scroll Chuck IUS, IUR

IUS – WITH HARD OUTSIDE SCV AND INSIDE SCN JAWS

IUR – WITH BASE JAWS ZC AND HARD REVERSIBLE TOP JAWS NT

M1

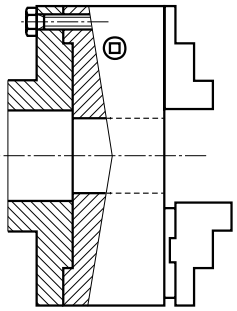

IUS

IUR

M2

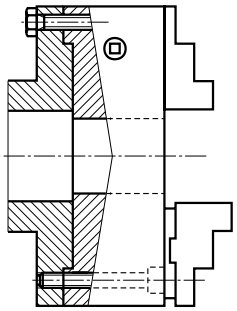

IUS

IUR

A

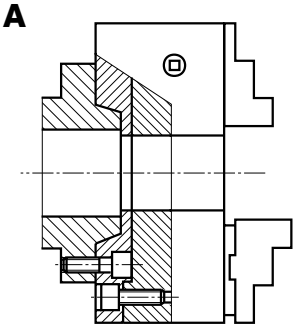

IUS

IUR

∅	Clamping type	3 SUPERIOR	3 I.	4 SUPERIOR	4 I.	6 SUPERIOR	6 I.
80	M1	083110	083210	084110	084210		
100	M1	103110	103210	104110	104210		
125	M1	123110	123210	124110	124210	126110	126210
160	M1	163110	163210	164110	164210	166110	166210
200	M1	203110	203210	204110	204210	206110	206210
250	M1	253110	253210	254110	254210	256110	256210
315	M1	313110	313210	314110	314210	316110	316210
400	M1	403110	403210	404110	404210	406110	406210
100	M1	103110		104110		106110	
125	M1	123110		124110		126110	
160	M1	163110		164110		166110	
200	M1	203110		204110		206110	
250	M1	253110		254110		256110	
315	M1	313110		314110		316110	
400	M1	403110		404110		406110	
160	M2	163120	163220	164120	164220	166120	166220
200	M2	203120	203220	204120	204220	206120	206220
250	M2	253120	253220	254120	254220	256120	256220
315	M2	313120	313220	314120	314220	316120	316220
400	M2	403120	403220	404120	404220	406120	406220
500	M2	503120		504120		506120	
160	M2	163120		164120		166120	
200	M2	203120		204120		206120	
250	M2	253120		254120		256120	
315	M2	313120		314120		316120	
400	M2	403120		404120		406120	
500	M2	503120		504120		506120	
100	A 3	103133	103233	104133	104233		
125	A 3	123133	123233	124133	124233	126133	126233
125	A 4	123134	123234	124134	124234	126134	126234
160	A 3	163133	163233	164133	164233	166123	166233
160	A 4	163134	163234	164134	164234	166134	166234
160	A 5	163135	163235	164135	164235	166135	166235
200	A 3	203133	203233	204133	204233	206133	206233
200	A 4	203134	203234	204134	204234	206134	206234
200	A 5	203135	203235	204135	204235	206135	206235
200	A 6	203136	203236	204136	204236	206136	206236
250	A 4	253134	253234	254134	254233	256134	256234
250	A 5	253135	253235	254135	254234	256135	256235
250	A 6	253136	253236	254136	254235	256136	256236
250	A 8	253138	253238	254138	254238	256138	256238
315	A 5	313135	313235	314135	314235	316135	316235
315	A 6	313136	313236	314136	314236	316136	316236
315	A 8	313138	313238	314138	314238	316138	316238
315	A 11	313131	313231	314131	314231	316131	316231
400	A 6	403136	403236	404136	404236	406136	406236
400	A 8	403138	403238	404138	404238	406138	406238
400	A 11	403131	403231	404131	404231	406131	406231

DIN 55026
ISO 702/I
ČSN 20 1006

Self-centring Scroll Chuck IUS, IUR

∅	Clamping type	3 SUPERIOR	3 I.	4 SUPERIOR	4 I.	6 SUPERIOR	6 I.
100	B 3	103143	103243	104143	104243		
125	B 3	123143	123243	124143	124243	126143	126243
125	B 4	123144	123244	124144	124244	126144	126244
160	B 3	163143	163243	164143	164243	166143	166243
160	B 4	163144	163244	164144	164244	166144	166244
160	B 5	163145	163245	164145	164245	166145	166245
200	B 3	203143	203243	204143	204243	206143	206243
200	B 4	203144	203244	204144	204244	206144	206244
200	B 5	203145	203245	204145	204245	206145	206245
200	B 6	203146	203246	204146	204246	206146	206246
250	B 4	253144	253244	254144	254243	256144	256244
250	B 5	253145	253245	254145	254244	256145	256245
250	B 6	253146	253246	254146	254245	256146	256246
250	B 8	253148	253248	254148	254248	256148	256248
315	B 5	313145	313245	314145	314245	316145	316245
315	B 6	313146	313246	314146	314246	316146	316246
315	B 8	313148	313248	314148	314248	316148	316248
315	B 11	313141	313241	314141	314241	316141	316241
400	B 6	403146	403246	404146	404246	406146	406246
400	B 8	403148	403248	404148	404248	406148	406248
400	B 11	403141	403241	404141	404241	406141	406241
100	C 3	103153	103253	104153	104243		
125	C 3	123153	123253	124153	124253	126153	126253
125	C 4	123154	123254	124154	124254	126154	126254
160	C 3	163153	163253	164153	164253	166153	166253
160	C 4	163154	163254	164154	164254	166154	166254
160	C 5	163155	163255	164155	164255	166155	166255
200	C 3	203153	203253	204153	204253	206153	206253
200	C 4	203154	203254	204154	204254	206154	206254
200	C 5	203155	203255	204155	204255	206155	206255
200	C 6	203156	203256	204156	204256	206156	206256
250	C 4	253154	253254	254154	254253	256154	256254
250	C 5	253155	253255	254155	254254	256155	256255
250	C 6	253156	253256	254156	254255	256156	256256
250	C 8	253158	253258	254158	254258	256158	256258
315	C 5	313155	313255	314155	314255	316155	316255
315	C 6	313156	313256	314156	314256	316156	316256
315	C 8	313158	313258	314158	314258	316158	316258
315	C 11	313151	313251	314151	314251	316151	316251
400	C 6	403156	403256	404156	404256	406156	406256
400	C 8	403158	403258	404158	404258	406158	406258
400	C 11	403151	403251	404151	404251	406151	406251
100	D 3	103163	103263	104153	104243		
125	D 3	123163	123263	124163	124263	126163	126263
125	D 4	123164	123264	124164	124264	126164	126264
160	D 3	163163	163263	164163	164263	166163	166263
160	D 4	163164	163264	164164	164264	166164	166264
160	D 5	163165	163265	164165	164265	166165	166265
200	D 3	203163	203263	204163	204263	206163	206263
200	D 4	203164	203264	204164	204264	206164	206264
200	D 5	203165	203265	204165	204265	206165	206265
200	D 6	203166	203266	204166	204266	206166	206266
250	D 4	253164	253264	254164	254263	256164	256264
250	D 5	253165	253265	254165	254264	256165	256265
250	D 6	253166	253266	254166	254265	256166	256266
250	D 8	253168	253268	254168	254268	256168	256268
315	D 5	313165	313265	314165	314265	316165	316265
315	D 6	313166	313266	314166	314266	316166	316266
315	D 8	313168	313268	314168	314268	316168	316268
315	D 11	313161	313261	314161	314261	316161	316261
400	D 6	403166	403266	404166	404266	406166	406266
400	D 8	403168	403268	404168	404268	406168	406268
400	D 11	403161	403261	404161	404261	406161	406261

IUS – WITH HARD OUTSIDE SCV AND INSIDE SCN JAWS

IUR – WITH BASE JAWS ZC AND HARD REVERSIBLE TOP JAWS NT

B **IUS**

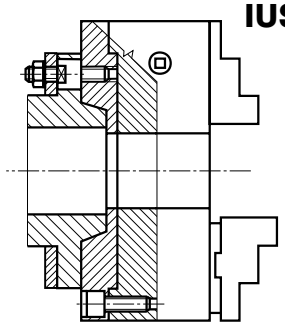

DIN 55027
ISO 702/III
ČSN 20 1011

IUR

C **IUS**

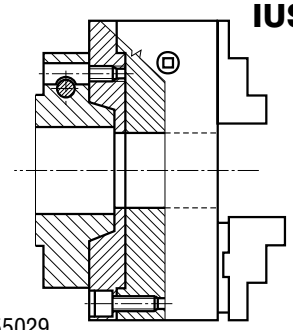

DIN 55029
ISO 702/II
ČSN 20 1018

IUR

D **IUS**

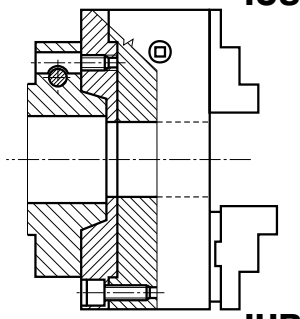

ISO 702/II
inch

IUR

Self-centring Scroll Chuck IUS, IUR

IUS – WITH HARD OUTSIDE SCV AND INSIDE SCN JAWS

∅	E H7 /mm/	F ±0,2 /mm/	G /mm/	H /mm/	J /mm/	K /mm/	L /mm/	N /mm/	O /mm/
80	63	70	3×M5	35,5	13	6	-	-	16,5
100	80	90	3×M6	41,5	17	8	85	58,4	18
125	100	110	3×M8	51,5	19	8	97,6	66,4	22
160	130	143	3×M8	66	23	9	108,4	71,4	22
200	162	180	3×M10	74	29	11	127,5	87,5	17,5
250	210	226	3×M10	97,5	33	12	143,5	93,5	29,5
315	265	290	4×M12	123	40	14	160,4	107,4	35
400	350	375	6×M12	152,5	50	17	186,9	124,9	39
500	420	458	6×M16	188,5	54	17	214,6	140,9	43

IUR – WITH BASE JAWS ZC AND HARD REVERSIBLE TOP JAWS NT

∅	P1) /mm/	P2) /mm/	S /mm/	T /mm/	R /mm/	U /mm/
80	-	-	3	45	17	-
100	-	-	3	52	23	46
125	-	-	4	58	28	56
160	4×9	3×9	4	62	48	67
200	4×11	3×11	5	76	52	76
250	4×11	3×11	5	82	78	91
315	4×13	6×13	6	100	108	108
400	8×13	6×13	7	110	144	122
500	8×17	6×17	8	120	190	127

M1

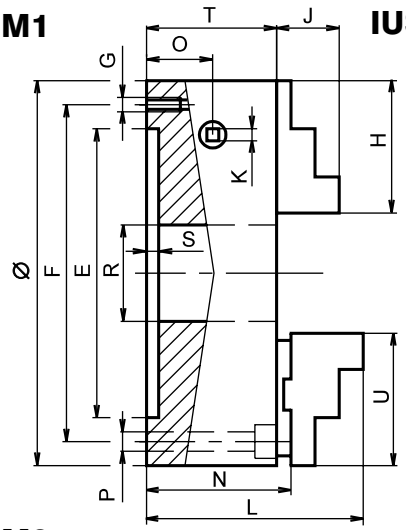

IUS

M2

IUR

∅	kužele	E /mm/	F /mm/	G /mm/	H /mm/	J /mm/	K /mm/	L /mm/	N /mm/
100	3	53,9	70,6	12	41,5	17	8	100	73,4
125	3	53,9	70,6	12	51,5	19	8	108,6	77,4
125	4	63,5	82,6	12	51,5	19	8	108,6	77,4
160	3	53,9	70,6	12	66	23	9	119,4	82,4
160	4	63,5	82,6	12	66	23	9	119,4	82,4
160	5	82,5	104,8	12	66	23	9	119,4	82,4
200	3	53,9	70,6	12	74	29	11	142,5	102,5
200	4	63,5	82,6	12	74	29	11	142,5	102,5
200	5	82,5	104,8	12	74	29	11	142,5	102,5
200	6	106,3	133,4	14	74	29	11	142,5	102,5
250	4	63,5	82,6	12	97,5	33	12	154,5	104,5
250	5	82,5	104,8	12	97,5	33	12	154,5	104,5
250	6	106,3	133,4	14	97,5	33	12	162,5	112,5
250	8	139,7	171,4	18	97,5	33	12	162,5	112,5
315	5	82,5	104,8	12	123	40	14	174,4	121,4
315	6	106,3	133,4	14	123	40	14	174,4	121,4
315	8	139,7	171,4	18	123	40	14	184,4	131,4
315	11	196,8	235	22	123	40	14	184,4	131,4
400	6	106,3	133,4	14	152,5	50	17	202,9	140,9
400	8	139,7	171,4	18	152,5	50	17	202,9	140,9
400	11	196,8	235	22	152,5	50	17	209,9	147,9

A DIN 55026
ISO 702/I
ČSN 20 1006

IUS

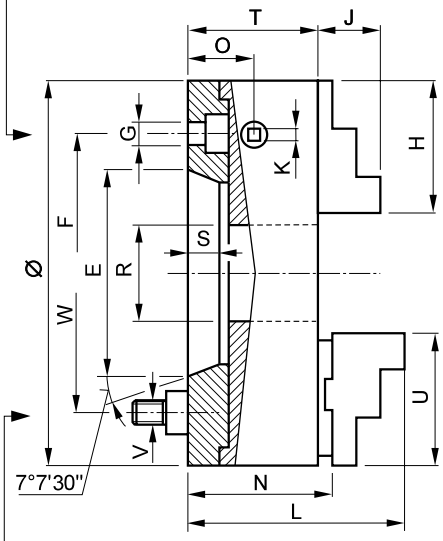

IUR

B DIN 55027
ISO 702/III
ČSN 20 1011

∅	kužele	O /mm/	R /mm/	S /mm/	T /mm/	U /mm/	V /mm/	W /mm/
100	3	33	23	10	67	46	M10	75
125	3	33	28	10	69	56	M10	75
125	4	33	28	10	69	56	M10	85
160	3	33	48	10	73	67	M10	75
160	4	33	48	10	73	67	M10	85
160	5	33	48	12	73	67	M10	104,8
200	3	42,5	52	10	91	76	M10	75
200	4	42,5	52	10	91	76	M10	85
200	5	42,5	52	12	91	76	M10	104,8
200	6	42,5	52	13	91	76	M12	133,4

Self-centring Scroll Chuck IUS, IUR

∅	Size of taper	O /mm/	R /mm/	S /mm/	T /mm/	U /mm/	V /mm/	W /mm/
250	4	40,5	62	10	93	91	M10	85
250	5	40,5	78	12	93	91	M10	104,8
250	6	48,5	78	13	101	91	M12	133,4
250	8	48,5	78	14	101	91	M16	171,4
315	5	49	80	12	114	108	M10	104,8
315	6	49	104	13	114	108	M12	133,4
315	8	59	108	14	124	108	M16	171,4
315	11	59	108	16	124	108	M20	235
400	6	55	104	13	126	122	M12	133,4
400	8	55	137	14	126	122	M16	171,4
400	11	62	144	16	133	122	M20	235

IUS – WITH HARD OUTSIDE SCV AND INSIDE SCN JAWS

IUR – WITH BASE JAWS ZC AND HARD REVERSIBLE TOP JAWS NT

∅	Size of taper	E /mm/	F /mm/	G /mm/	H /mm/	J /mm/	K /mm/	L /mm/	N /mm/
100	3	53,9	70,6	14,3	41,5	17	8	111	84,4
125	3	53,9	70,6	14,3	51,5	19	8	121,6	90,4
125	4	63,5	82,6	15,9	51,5	19	8	121,6	90,4
160	3	53,9	70,6	14,3	66	23	9	132,4	95,4
160	4	63,5	82,6	15,9	66	23	9	132,4	95,4
160	5	82,5	104,8	19	66	23	9	134,4	97,4
200	3	53,9	70,6	14,3	74	29	11	150,5	110,5
200	4	63,5	82,6	15,9	74	29	11	150,5	110,5
200	5	82,5	104,8	19	74	29	11	157,5	117,5
200	6	106,3	133,4	22,2	74	29	11	157,5	117,5
250	4	63,5	82,6	15,9	97,5	33	12	168,5	118,5
250	5	82,5	104,8	19	97,5	33	12	168,5	118,5
250	6	106,3	133,4	22,2	97,5	33	12	176,5	126,5
250	8	139,7	171,4	25,4	97,5	33	12	176,5	126,5
315	5	82,5	104,8	19	123	40	14	189,4	136,4
315	6	106,3	133,4	22,2	123	40	14	189,4	136,4
315	8	139,7	171,4	25,4	123	40	14	199,4	146,4
315	11	196,8	235	30,2	123	40	14	199,4	146,4
400	6	106,3	133,4	22,2	152,5	50	17	217,9	155,9
400	8	139,7	171,4	25,4	152,5	50	17	217,9	155,9
400	11	196,8	235	30,2	152,5	50	17	224,9	162,9

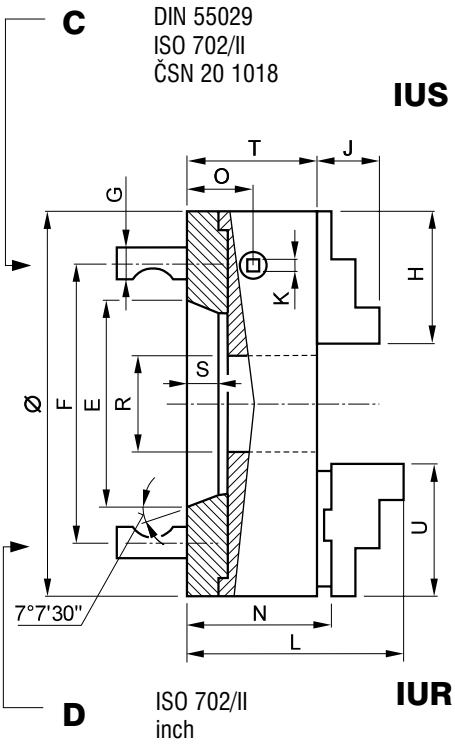

∅	Size of taper	O /mm/	R /mm/	S /mm/	T /mm/	U /mm/
100	3	44	23	10	78	46
125	3	46	29	10	82	56
125	4	46	29	10	82	56
160	3	46	48	10	86	67
160	4	46	48	10	86	67
160	5	48	48	12	88	67
200	3	50,5	52	10	99	76
200	4	50,5	52	10	99	76
200	5	57,5	52	12	106	76
200	6	57,5	52	13	106	76
250	4	54,5	62	10	107	91
250	5	54,5	78	12	107	91
250	6	62,5	78	13	115	91
250	8	62,5	78	14	115	91
315	5	64	80	12	129	108
315	6	64	104	13	129	108
315	8	74	108	14	139	108
315	11	74	108	16	139	108
400	6	70	104	13	141	122
400	8	70	137	14	141	122
400	11	77	144	16	148	122

Self-centring Scroll Chuck With Linear Contraction Construction IUZ, IUT

IUZ – WITH HARD OUTSIDE SCV AND INSIDE SCN JAWS

IUT – WITH BASE JAWS ZC AND HARD REVERSIBLE TOP JAWS NT

B

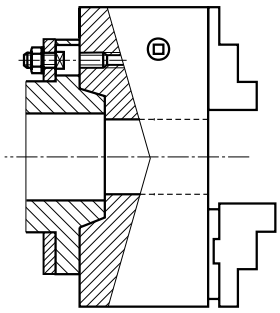

DIN 55027
ISO 702/III
ČSN 20 1011

C

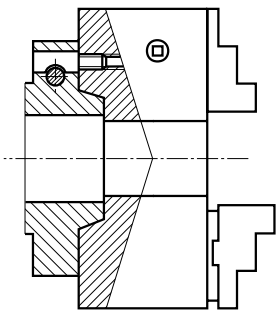

DIN 55029
ISO 702/II
ČSN 20 1018

∅	Clamping type	3 SUPERIOR	3 I.	4 SUPERIOR	4 I.	6 SUPERIOR	6 I.
100	B 3	103143	103243	104143	104243		
125	B 3	123143	123243	124143	124243	126143	126243
125	B 4	123144	123244	124144	124244	126144	126244
160	B 3	163143	163243	164143	164243	166143	166243
160	B 4	163144	163244	164144	164244	166144	166244
160	B 5	163145	163245	164145	164245	166145	166245
200	B 3	203143	203243	204143	204243	206143	206243
200	B 4	203144	203244	204144	204244	206144	206244
200	B 5	203145	203245	204145	204245	206145	206245
200	B 6	203146	203246	204146	204246	206146	206246
250	B 4	253144	253244	254144	254243	256144	256244
250	B 5	253145	253245	254145	254244	256145	256245
250	B 6	253146	253246	254146	254245	256146	256246
250	B 8	253148	253248	254148	254248	256148	256248
315	B 5	313145	313245	314145	314245	316145	316245
315	B 6	313146	313246	314146	314246	316146	316246
315	B 8	313148	313248	314148	314248	316148	316248
315	B 11	313141	313241	314141	314241	316141	316241
400	B 6	403146	403246	404146	404246	406146	406246
400	B 8	403148	403248	404148	404248	406148	406248
400	B 11	403141	403241	404141	404241	406141	406241
100	C 3	103153	103253	104153	104253		
125	C 3	123153	123253	124153	124253	126153	126253
125	C 4	123154	123254	124154	124254	126154	126254
160	C 3	163153	163253	164153	164253	166153	166253
160	C 4	163154	163254	164154	164254	166154	166254
160	C 5	163155	163255	164155	164255	166155	166255
200	C 3	203153	203253	204153	204253	206153	206253
200	C 4	203154	203254	204154	204254	206154	206254
200	C 5	203155	203255	204155	204255	206155	206255
200	C 6	203156	203256	204156	204256	206156	206256
250	C 4	253154	253254	254154	254253	256154	256254
250	C 5	253155	253255	254155	254254	256155	256255
250	C 6	253156	253256	254156	254255	256156	256256
250	C 8	253158	253258	254158	254258	256158	256258
315	C 5	313155	313255	314155	314255	316155	316255
315	C 6	313156	313256	314156	314256	316156	316256
315	C 8	313158	313258	314158	314258	316158	316258
315	C 11	313151	313251	314151	314251	316151	316251
400	C 6	403156	403256	404156	404256	406156	406256
400	C 8	403158	403258	404158	404258	406158	406258
400	C 11	403151	403251	404151	404251	406151	406251

Self-centring Scroll Chuck With Linear Contraction Construction IUZ, IUT

∅	Clamping type	3 SUPERIOR	3 I.	4 SUPERIOR	4 I.	6 SUPERIOR	6 I.
100	D 3	103163	103263	104163	104263		
125	D 3	123163	123263	124163	124263	126163	126263
125	D 4	123164	123264	124164	124264	126164	126264
160	D 3	163163	163263	164163	164263	166163	166263
160	D 4	163164	163264	164164	164264	166164	166264
160	D 5	163165	163265	164165	164265	166165	166265
200	D 3	203163	203263	204163	204263	206163	206263
200	D 4	203164	203264	204164	204264	206164	206264
200	D 5	203165	203265	204165	204265	206165	206265
200	D 6	203166	203266	204166	204266	206166	206266
250	D 4	253164	253264	254164	254263	256164	256264
250	D 5	253165	253265	254165	254264	256165	256265
250	D 6	253166	253266	254166	254265	256166	256266
250	D 8	253168	253268	254168	254268	256168	256268
315	D 5	313165	313265	314165	314265	316165	316265
315	D 6	313166	313266	314166	314266	316166	316266
315	D 8	313168	313268	314168	314268	316168	316268
315	D 11	313161	313261	314161	314261	316161	316261
400	D 6	403166	403266	404166	404266	406166	406266
400	D 8	403168	403268	404168	404268	406168	406268
400	D 11	403161	403261	404161	404261	406161	406261

IUZ – WITH HARD OUTSIDE SCV AND INSIDE SCN JAWS

IUT – WITH BASE JAWS ZC AND HARD REVERSIBLE TOP JAWS NT

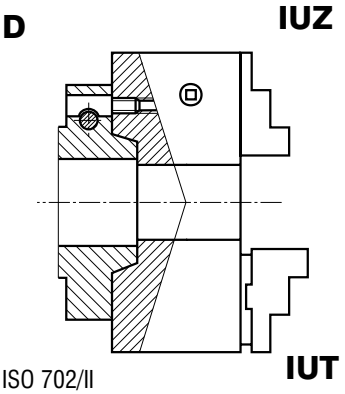

ISO 702/II
inch

∅	Taper Size	E /mm/	F /mm/	G /mm/	H /mm/	J /mm/	K /mm/	L[1] /mm/	L[2] /mm/	N[1] /mm/
100	3	53,9	70,6	14,3	41,5	17	8	95	106	68,4
125	3	53,9	70,6	14,3	51,5	19	8	101,6	101,6	70,4
125	4	63,5	82,6	15,9	51,5	19	8	101,6	101,6	70,4
160	3	53,9	70,6	14,3	66	23	9	115,4	126,4	78,4
160	4	63,5	82,6	15,9	66	23	9	115,4	128,4	78,4
160	5	82,5	104,8	19	66	23	9	115,4	115,4	76,4
200	3	53,9	70,6	14,3	74	29	11	131,5	132,5	91,5
200	4	63,5	82,6	15,9	74	29	11	131,5	134,5	91,5
200	5	82,5	104,8	19	74	29	11	131,5	136,5	91,5
200	6	106,3	133,4	22,2	74	29	11	131,5	131,5	91,5
250	4	63,5	82,6	15,9	97,5	33	12	149,5	153,5	99,5
250	5	82,5	104,8	19	97,5	33	12	149,5	155,5	99,5
250	6	106,3	133,4	22,2	97,5	33	12	149,5	160,5	99,5
250	8	139,7	171,4	25,4	97,5	33	12	149,5	160,5	99,5
315	5	82,5	104,8	19	123	40	14	170,4	170,4	117,4
315	6	106,3	133,4	22,2	123	40	14	170,4	173,4	117,4
315	8	139,7	171,4	25,4	123	40	14	170,4	176,4	117,4
315	11	196,8	235	30,2	123	40	14	170,4	176,4	117,4
400	6	106,3	133,4	22,2	152,5	50	17	196,9	196,9	134,9
400	8	139,7	171,4	25,4	152,5	50	17	196,9	197,9	134,9
400	11	196,8	235	30,2	152,5	50	17	196,9	206,9	134,9

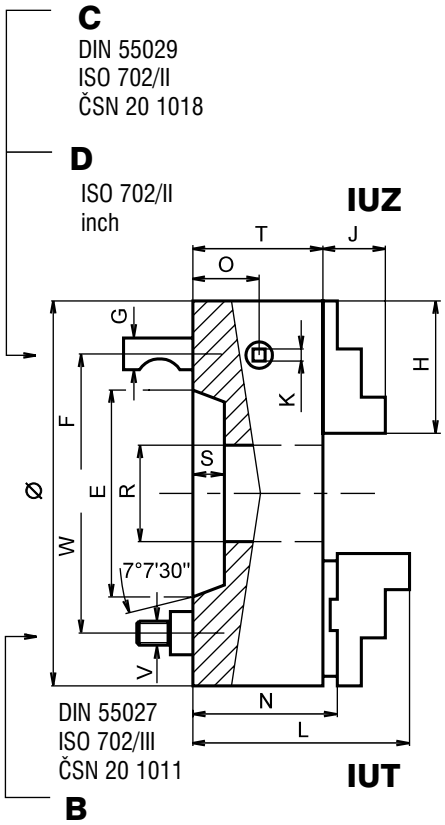

∅	Taper size	N[2] /mm/	O[1] /mm/	O[2] /mm/	R /mm/	S /mm/	T[1] /mm/	T[2] /mm/	V /mm/	W /mm/
100	3	79,4	28	36	23	10	62	73	M10	75
125	3	70,4	26	26	28	10	62	62	M10	75
125	4	70,4	26	26	28	10	62	62	M10	85
160	3	89,4	29	40	48	10	69	80	M10	75
160	4	91,4	29	42	48	10	69	82	M10	85
160	5	76,4	27	27	48	12	67	67	M10	104,8
200	3	102,5	31,5	42,5	52	10	80	91	M10	75
200	4	104,5	31,5	44,5	52	10	80	93	M10	85
200	5	106,5	31,5	46,5	52	12	80	95	M10	104,8
200	6	91,5	31,5	31,5	52	13	80	80	M12	133,4
250	4	103,5	35,5	39,5	62	10	88	92	M10	85
250	5	105,5	35,5	41,5	78	12	88	94	M12	104,8
250	6	110,5	35,5	46,5	78	13	88	99	M12	133,4
250	8	110,5	35,5	46,5	78	14	88	99	M16	171,4
315	5	117,5	45	45	80	12	110	110	M10	104,8
315	6	120,4	45	48	104	13	110	113	M12	133,4
315	8	123,4	45	51	108	14	110	116	M16	171,4
315	11	123,4	45	51	108	16	110	116	M20	235
400	6	134,9	49	49	104	13	120	121	M12	133,4
400	8	135,9	49	50	137	14	120	121	M16	171,4
400	11	149,9	49	59	144	16	120	130	M20	235

[1] - for workmanship B only

[2] - for workmanship C and D only

Self-centring Scroll Chuck Two-jaws IUD
Self-centring Scroll With Soft Sectional Jaws IUM

IUD – WITH BASE JAWS SM AND SOFT TOP JAWS ND

IUM – WITH BASE JAWS SM AND SOFT TOP JAWS NC

∅	Clamping type	2 SUPERIOR	2 I.	3 SUPERIOR	3 I.	4 SUPERIOR	4 I.
80	M1	083310		083310		084310	
100	M1	103310		103310		104310	
125	M1	123310		123310		124310	
160	M1	163310		163310		164310	
200	M1	203310		203310		204310	
250	M1	253310		253310		254310	
315	M1	313310		313310		314310	
400	M1	403310		403310		404310	
160	M2	162320		163320		164320	
200	M2	202320		203320		204320	
250	M2	252320		253320		254320	
315	M2	312320		313320		314320	
400	M2	402320		403320		404320	
500	M2	502320		503320		504320	
160	M2	163120		164120		166120	
200	M2	203120		204120		206120	
250	M2	253120		254120		256120	
315	M2	313120		314120		316120	
400	M2	403120		404120		406120	
500	M2	503120		504120		506120	
100	A 3	102333		103333		104333	
125	A 3	122333		123333		124333	
125	A 4	122334		123334		124334	
160	A 3	162333		163333		164333	
160	A 4	162334		163334		164334	
160	A 5	162335		163335		164335	
200	A 3	202333		203333		204333	
200	A 4	202334		203334		204334	
200	A 5	202335		203335		204335	
200	A 6	202336		203336		204336	
250	A 4	252334		253334		254334	
250	A 5	252335		253335		254335	
250	A 6	252336		253336		254336	
250	A 8	252338		253338		254338	
315	A 5	312335		313335		314335	
315	A 6	312336		313336		314336	
315	A 8	312338		313338		314338	
315	A 11	312331		313331		314331	
400	A 6	402336		403336		404336	
400	A 8	402338		403338		404338	
400	A 11	402331		403331		404331	

M1

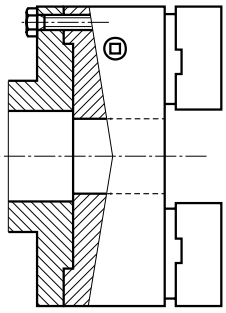

M2

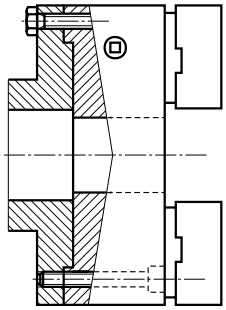

A

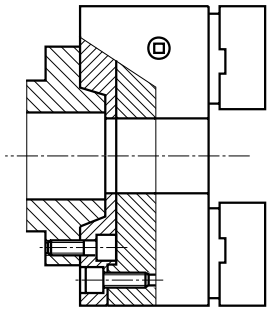

DIN 55026
ISO 702/I
ČSN 20 1006

Self-centring Scroll Chuck Two-jaws IUD
Self-centring Scroll With Soft Sectional Jaw IUM

∅	Clamping type	2 SUPERIOR	2 I.	3 SUPERIOR	3 I.	4 SUPERIOR	4 I.
100	B 3	102343		103343		104343	
125	B 3	122343		123343		124343	
125	B 4	122344		123344		124344	
160	B 3	162343		163343		164343	
160	B 4	162344		163344		164344	
160	B 5	162345		163345		164345	
200	B 3	202343		203343		204343	
200	B 4	202344		203344		204344	
200	B 5	202345		203345		204345	
200	B 6	202346		203346		204346	
250	B 4	252344		253344		254344	
250	B 5	252345		253345		254345	
250	B 6	252346		253346		254346	
250	B 8	252348		253348		254348	
315	B 5	312345		313345		314345	
315	B 6	312346		313346		314346	
315	B 8	312348		313348		314348	
315	B 11	312341		313341		314341	
400	B 6	402346		403346		404346	
400	B 8	402348		403348		404348	
400	B 11	402341		403341		404341	
100	C 3	102353		103353		104353	
125	C 3	122353		123353		124353	
125	C 4	122354		123344		124354	
160	C 3	162353		163353		164353	
160	C 4	162354		163354		164354	
160	C 5	162355		163355		164355	
200	C 3	202353		203353		204353	
200	C 4	202354		203354		204354	
200	C 5	202355		203355		204355	
200	C 6	202356		203356		204356	
250	C 4	252354		253354		254354	
250	C 5	252355		253355		254355	
250	C 6	252356		253356		254356	
250	C 8	252358		253358		254358	
315	C 5	312355		313355		314355	
315	C 6	312356		313356		314356	
315	C 8	312358		313358		314358	
315	C 11	312351		313351		314351	
400	C 6	402356		403356		404356	
400	C 8	402358		403358		404358	
400	C 11	402351		403351		404351	
100	D 3	102363		103363		104363	
125	D 3	122363		123363		124363	
125	D 4	122364		123364		124364	
160	D 3	162363		163363		164363	
160	D 4	162364		163364		164364	
160	D 5	162365		163365		164365	
200	D 3	202363		203363		204363	
200	D 4	202364		203364		204364	
200	D 5	202365		203365		204365	
200	D 6	202366		203366		204366	
250	D 4	252364		253364		254364	
250	D 5	252365		253365		254365	
250	D 6	252366		253366		254366	
250	D 8	252368		253368		254368	
315	D 5	312365		313365		314365	
315	D 6	312366		313366		314366	
315	D 8	312368		313368		314368	
315	D 11	312361		313361		314361	
400	D 6	402366		403366		404366	
400	D 8	402368		403368		404368	
400	D 11	402361		403361		404361	

IUD – WITH BASE JAWS SM AND SOFT TOP JAWS ND

IUM – WITH BASE JAWS SM AND SOFT TOP JAWS NC

B

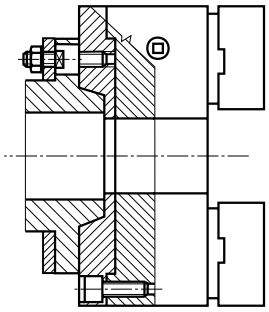

DIN 55027
ISO 702/III
ČSN 20 1011

C

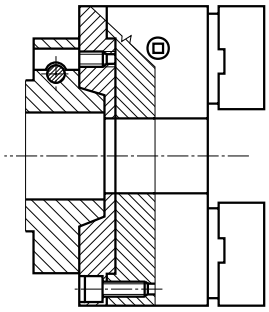

DIN 55029
ISO 702/II
ČSN 20 1018

D

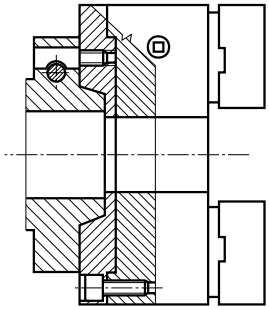

ISO 702/II
inch

Self-centring Scroll Chuck Two-jaws IUD
Self-centring Scroll With Soft Sectional Jaws IUM

IUD – WITH BASE JAWS SM AND SOFT TOP JAWS ND

∅	E H7 /mm/	F ±0,2 /mm/	G /mm/	K /mm/	L[3] /mm/	L[4] /mm/	N /mm/	O
80	63	70	3×M5	6	-	69,3	52,3	16,5
100	80	90	3×M6	8	79,3	74,3	57,3	18
125	100	110	3×M8	8	94,3	89,3	62,3	22
160	130	143	3×M8	9	108	99	66	22
200	162	180	3×M10	11	117	117	8,	27,5
250	210	226	3×M10	12	133	123	86	29,5
315	265	290	4×M12	14	160,4	153	105	35
400	350	375	6×M12	17	186	181	115	39
500	420	458	6×M16	17	2105	205	125	43

IUM – WITH BASE JAWS SM AND SOFT TOP JAWS NC

∅	P[1] /mm/	S /mm/	T /mm/	R /mm/	U /mm/	P[2] /mm/
80	-	3	45	17	44	
100	-	3	52	23	50	
125	-	4	58	28	60	
160	4×9	4	62	48	75	3×9
200	4×11	5	76	52	95	3×11
250	4×11	5	82	78	120	3×11
315	4×13	6	100	108	140	6×13
400	8×13	7	110	144	165	6×13
500	8×17	8	120	190	205	6×17

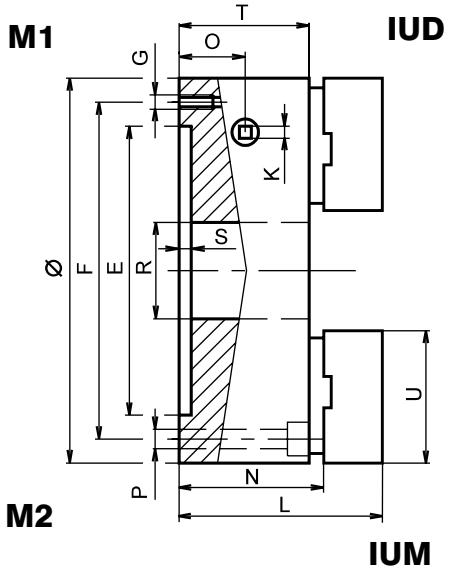

∅	Size of taper	E /mm/	F /mm/	G /mm/	K /mm/	L[3] /mm/	L[4] /mm/	N
100	3	53,9	70,6	12	8	94,3	89,3	72,3
125	3	53,9	70,6	12	8	105,3	100,3	73,3
125	4	63,5	82,6	12	8	105,3	100,3	73,3
160	3	53,9	70,6	12	9	119	110	77
160	4	63,5	82,6	12	9	119	110	77
160	5	82,5	104,8	12	9	119	110	77
200	3	53,9	70,6	12	11	132	132	95
200	4	63,5	82,6	12	11	132	132	95
200	5	82,5	104,8	12	11	132	132	95
200	6	106,3	133,4	14	11	132	132	95
250	4	63,5	82,6	12	12	144	134	97
250	5	82,5	104,8	12	12	144	134	97
250	6	106,3	133,4	14	12	152	142	105
250	8	139,7	171,4	18	12	152	142	105
315	5	82,5	104,8	12	14	180	167	119
315	6	106,3	133,4	14	14	180	167	119
315	8	139,7	171,4	18	14	190	177	129
315	11	196,8	235	22	14	190	177	129
400	6	106,3	133,4	14	17	202	197	131
400	8	139,7	171,4	18	17	202	197	131
400	11	196,8	235	22	17	209	204	138

A DIN 55026
ISO 702/I
ČSN 20 1006

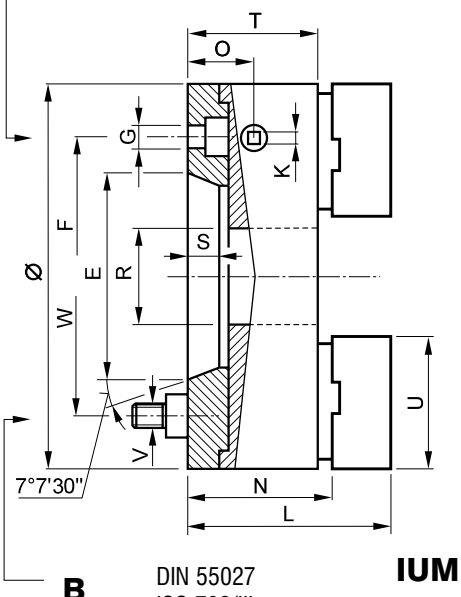

B DIN 55027
ISO 702/III
ČSN 20 1011

∅	Size of taper	O /mm/	R /mm/	S /mm/	T /mm/	U /mm/	V /mm/	W /mm/
100	3	33	23	10	67	50	M10	75
125	3	33	28	10	69	60	M10	75
125	4	33	28	10	69	60	M10	85
160	3	33	48	10	73	75	M10	75
160	4	33	48	10	73	75	M10	85
160	5	33	48	12	73	75	M10	104,8
200	3	42,5	52	10	91	95	M10	75
200	4	42,5	52	10	91	95	M10	85
200	5	42,5	52	12	91	95	M10	104,8
200	6	42,5	52	13	91	95	M12	133,4

Self-centring Scroll Chuck Two-jaws IUD
Self-centring Scroll With Soft Sectional Jaw IUM

∅	Size of taper	O /mm/	R /mm/	S /mm/	T /mm/	U /mm/	V /mm/	W /mm/
250	4	40,5	62	10	93	120	M10	85
250	5	40,5	78	12	93	120	M10	104,8
250	6	48,5	78	13	101	120	M12	133,4
250	8	48,5	78	14	101	120	M16	171,4
315	5	49	80	12	114	140	M10	104,8
315	6	49	104	13	114	140	M12	133,4
315	8	59	108	14	124	140	M16	171,4
315	11	59	108	16	124	140	M20	235
400	6	55	104	13	126	165	M12	133,4
400	8	55	137	14	126	165	M16	171,4
400	11	62	144	16	133	165	M20	235

IUD – WITH BASE JAWS SM AND SOFT TOP JAWS ND

IUM – WITH BASE JAWS SM AND SOFT TOP JAWS NC

∅	Size of taper	E /mm/	F /mm/	G /mm/	K /mm/	L[3] /mm/	L[4] /mm/	N
100	3	53,9	70,6	14,3	8	105,3	100,3	83,3
125	3	53,9	70,6	14,3	8	118,3	113,3	86,3
125	4	63,5	82,6	15,9	8	118,3	113,3	86,3
160	3	53,9	70,6	14,3	9	132	123	90
160	4	63,5	82,6	15,9	9	132	123	90
160	5	82,5	104,8	19	9	134	125	92
200	3	53,9	70,6	14,3	11	140	140	103
200	4	63,5	82,6	15,9	11	140	140	103
200	5	82,5	104,8	19	11	147	147	110
200	6	106,3	133,4	22,5	11	147	147	110
250	4	63,5	82,6	15,9	12	158	148	111
250	5	82,5	104,8	19	12	158	148	111
250	6	106,3	133,4	22,5	12	166	156	119
250	8	139,7	171,4	25,4	12	166	156	119
315	5	82,5	104,8	19	14	195	182	134
315	6	106,3	133,4	22,5	14	195	182	134
315	8	139,7	171,4	25,4	14	205	192	144
315	11	196,8	235	30,2	14	205	192	144
400	6	106,3	133,4	22,5	17	217	212	146
400	8	139,7	171,4	25,4	17	217	212	146
400	11	196,8	235	3,2	17	224	219	153

∅	Size of taper	O /mm/	R /mm/	S /mm/	T /mm/	U /mm/
100	3	44	23	10	78	50
125	3	46	29	10	82	60
125	4	46	29	10	82	60
160	3	46	48	10	86	75
160	4	46	48	10	86	75
160	5	48	48	12	88	75
200	3	50,5	52	10	99	95
200	4	50,5	52	10	99	95
200	5	57,5	52	12	106	95
200	6	57,5	52	13	106	95
250	4	54,5	62	10	107	120
250	5	54,5	78	12	107	120
250	6	62,5	78	13	115	120
250	8	62,5	78	14	115	120
315	5	64	80	12	129	140
315	6	64	104	13	129	140
315	8	74	108	14	139	140
315	11	74	108	16	139	140
400	6	70	104	13	141	165
400	8	70	137	14	141	165
400	11	77	144	16	148	165

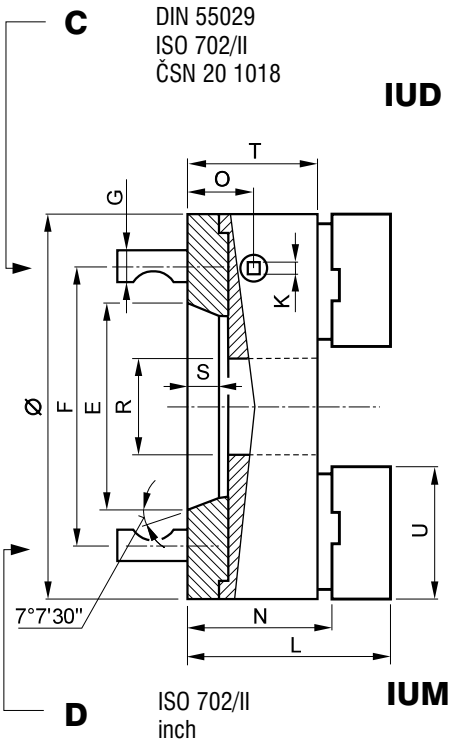

[3] - for IUD only

[4] - for IUM only

Self-centring Scroll Chuck IUG, IUH DIN 6350

IUG – WITH HARD OUTSIDE SCV AND INSIDE SCN JAWS

IUH – WITH BASE JAWS ZC AND HARD REVERSIBLE TOP JAWS NT

M2 **IUG**

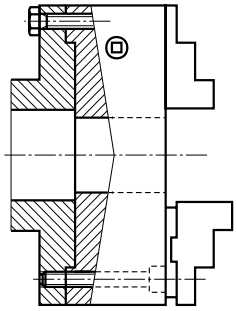

DIN 6350 **IUH**

∅	Clamping type	3 SUPERIOR	3 I.	4 SUPERIOR	4 I.	6 SUPERIOR	6 I.
80	M2	083120	083220	084120	084220		
100	M2	103120	103220	104120	104220		
125	M2	123120	123220	124120	124220	126120	126220
160	M2	163120	163220	164120	164220	166120	166220
200	M2	203120	203220	204120	204220	206120	206220
250	M2	253120	253220	254120	254220	256120	256220
315	M2	313120	313220	314120	314220	316120	316220
400	M2	403120	403220	404120	404220	406120	406220
500	M2	503120		504120		506120	
100	M2	103120		104120			
125	M2	123120		124120		126120	
160	M2	163120		164120		166120	
200	M2	203120		204120		206120	
250	M2	253120		254120		256120	
315	M2	313120		314120		316120	
400	M2	403120		404120		406120	
500	M2	503120		504120		506120	

M2 **IUG**

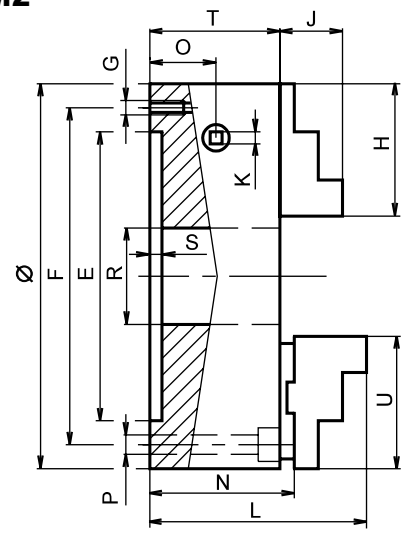

DIN 6350 **IUH**

∅	E H7 /mm/	F ±0,2 /mm/	G /mm/	H /mm/	J /mm/	K /mm/	L /mm/	N /mm/	O /mm/
80	56	67	3×M6	35,5	13	6	-	-	16,5
100	70	83	3×M8	41,5	17	8	85	58,4	18
125	95	108	3×M8	51,5	19	8	97,6	66,4	22
160	125	140	3×M10	66	23	9	108,4	71,4	22
200	160	176	3×M10	74	29	11	127,5	87,5	27,5
250	200	224	3×M12	97,5	33	12	143,5	93,5	29,5
315	260	286	3×M16	123	40	14	160,4	107,4	35
400	330	362	6×M16	152,5	50	17	186,9	124,9	39
500	420	458	6×M16	188,5	54	17	214,6	140,9	43

∅	P[1] /mm/	P[2] /mm/	S /mm/	T /mm/	R /mm/	U /mm/
80	-	3×7	3	45	15	-
100	-	3×9	3	52	20	46
125	-	3×9	4	58	32	56
160	4×9	3×11	4	62	42	67
200	4×11	3×11	4	76	55	76
250	4×11	3×13	5	82	76	91
315	4×13	3×13	5	100	103	108
400	4×13	3×17	5	110	136	122
500	8×17	6×17	8	120	190	127

[1] - for 4-jaw workmanship M2

[2] - for 3 and 6-jaw workmanship M2

Self-centring Scroll Chuck IUGO, IUHO DIN 6350

IUGO – WITH HARD OUTSIDE SCV AND INSIDE SCN JAWS

IUHO – WITH BASE JAWS ZC AND HARD REVERSIBLE TOP JAWS NT

∅	Clamping type	3 SUPERIOR	3 I.	4 SUPERIOR	4 I.	6 SUPERIOR	6 I.
80	M2	083120		084120			
100	M2	103120		104120			
125	M2	123120		124120		126120	
160	M2	163120		164120		166120	
200	M2	203120		204120		206120	
250	M2	253120		254120		256120	
315	M2	313120		314120		316120	
400	M2	403120		404120		406120	
500	M2	503120		504120		506120	
100	M2	103120		104120			
125	M2	123120		124120		126120	
160	M2	163120		164120		166120	
200	M2	203120		204120		206120	
250	M2	253120		254120		256120	
315	M2	313120		314120		316120	
400	M2	403120		404120		406120	
500	M2	503120		504120		506120	

M2 **IUGO**

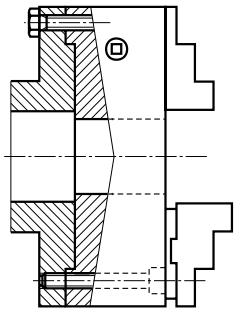

DIN 6350 **IUHO**

∅	E H7 /mm/	F ±0,2 /mm/	G /mm/	H /mm/	J /mm/	K /mm/	L /mm/	N /mm/	O /mm/
80	56	67	3×M6	35,5	13	6	-	-	16,5
100	70	83	3×M8	41,5	17	8	85	58,4	18
125	95	108	3×M8	51,5	19	8	97,6	66,4	22
160	125	140	3×M10	66	23	9	108,4	71,4	22
200	160	176	3×M10	74	29	11	127,5	87,5	27,5
250	200	224	3×M12	97,5	33	12	143,5	93,5	29,5
315	260	286	3×M16	123	40	14	160,4	107,4	35
400	330	362	3×M16	152,5	50	17	186,9	124,9	39
500	420	458	6×M16	188,5	54	17	214,6	140,9	43

∅	P[1] /mm/	P[2] /mm/	S /mm/	T /mm/	R /mm/	U /mm/			
80	-	3×7	3	45	15	-			
100	-	3×9	3	52	20	46			
125	4×9	3×9	4	58	32	56			
160	4×11	3×11	4	62	42	67			
200	4×11	3×11	4	76	55	76			
250	4×13	3×13	5	82	76	91			
315	4×13	3×13	5	100	103	108			
400	4×17	3×17	5	110	136	122			
500	8×17	6×17	8	120	190	127			

M2 **IUGO**

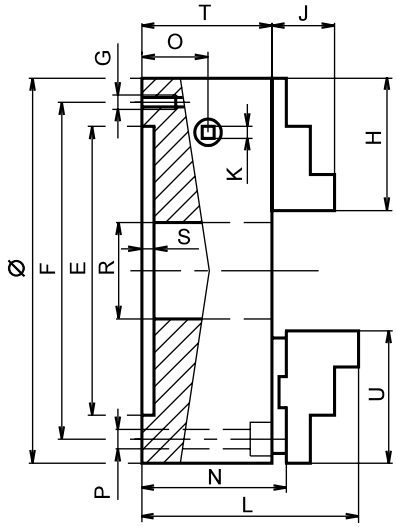

DIN 6350 **IUHO**

[1] - for 4-jaw execution M2

[2] - for 3 and 6-jaw execution M2

Self-centring Scroll Chuck With micro-adjustment IUGG, IUHG

IUGG – WITH HARD OUTSIDE SCV AND INSIDE SCN JAWS

IUHG – WITH BASE JAWS ZC AND HARD REVERSIBLE TOP JAWS NT

∅	Clamping type	3 SUPERIOR	3 I.			6 SUPERIOR	6 I.
80	M1	083110					
100	M1	103110					
125	M1	123110				126110	
160	M1	163110				166110	
200	M1	203110				206110	
250	M1	253110				256110	
315	M1	313110				316110	
100	M1	103110					
125	M1	123110				126110	
160	M1	163110				166110	
200	M1	203110				206110	
250	M1	253110				256110	
315	M1	313110				316110	

M1

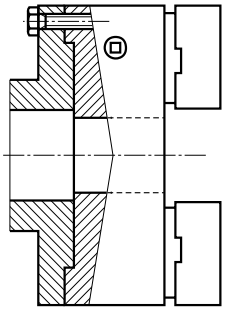

IUGG

IUHG

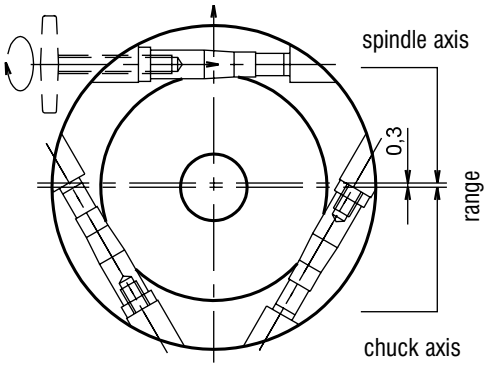

∅	E H6 /mm/	F ±0,2 /mm/	G /mm/	H /mm/	J /mm/	K /mm/	L /mm/	N /mm/	O /mm/
80	63,5	71,4	3×M5	35,5	13	6	-	-	16,5
100	76,2	88,9	3×M6	41,5	17	8	85	52,4	14
125	95	108	3×M8	51,5	19	8	97,6	65,4	20
160	125	140	3×M10	66	23	9	108,4	73,4	23
200	160	176	3×M10	74	29	11	127,5	85,5	26,2
250	200	224	3×M12	97,5	33	12	143,5	93,5	31,1
315	260	286	3×M12	123	40	14	160,4	99,4	31,7

M1

IUGG

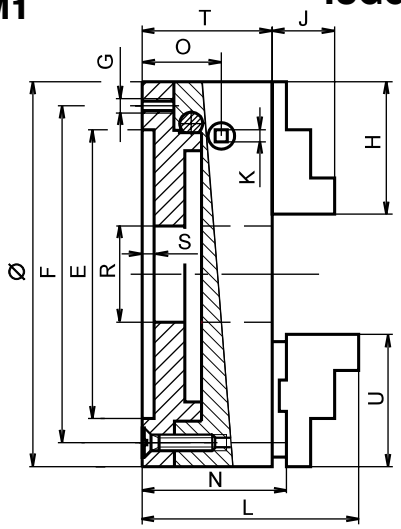

IUHG

∅	S /mm/	T /mm/	R /mm/	U /mm/					
80	3	45	19	-					
100	3	46	25,4	46					
125	4	57	35	56					
160	4	64	46	67					
200	4	74	55	76					
250	5	82	76	91					
315	5	103	103	108					

Self-centring Scroll Chuck With micro-adjustment IUGS, IUHS

IUGS – WITH HARD OUTSIDE SCV AND INSIDE SCN JAWS

IUHS – WITH BASE JAWS ZC AND HARD REVERSIBLE TOP JAWS NT

∅	Clamping type	3 SUPERIOR	3 I.		6 SUPERIOR	6 I.
160	M2	163120			166120	
200	M2	203120			206120	
250	M2	253120			256120	
315	M2	313120			316120	
400	M2	403120			406120	
160	M2	163120			166120	
200	M2	203120			206120	
250	M2	253120			256120	
315	M2	313120			316120	
400	M2	403120			406120	

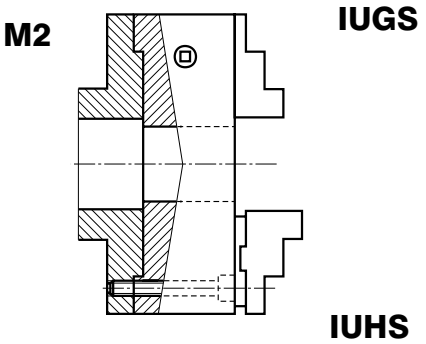

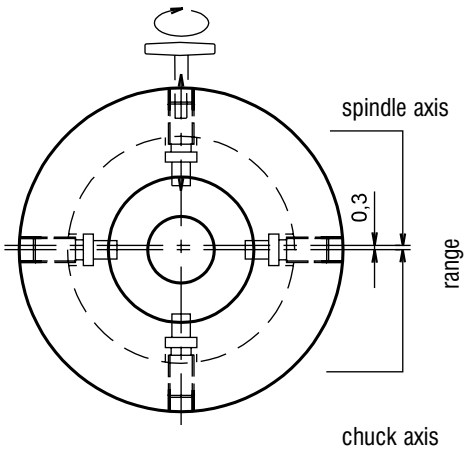

∅	E H6 /mm/	F ±0,2 /mm/	G /mm/	H /mm/	J /mm/	K /mm/	L /mm/	N /mm/	O /mm/
160	80	140	3×M10	66	23	9	119,4	82,4	253
200	120	176	3×M10	74	29	11	134,5	94,5	35,7
250	160	224	3×M12	97,5	33	12	153,5	103,5	38,9
315	200	286	3×M12	123	40	14	167,1	115,1	42,8
400	300	362	3×M162	152,5	50	17	207,2	145,2	64,3

∅	S /mm/	T /mm/	R /mm/	U /mm/					
160	16	73	46	67					
200	18	83	55	76					
250	20	92	76	91					
315	20	107	103	108					
400	28	130	136	122					

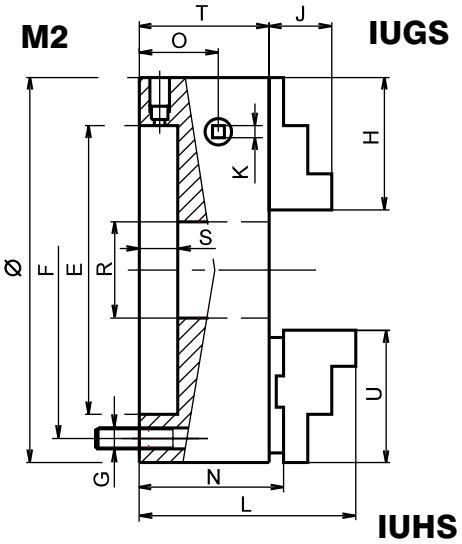

Face plate with Independent adjustable jaws LUD

LUD – WITH HARD REVERSIBLE JAWS LC

∅	
85	084020
100	104020
125	124020
160	164020
200	204020
250	254020
315	314020
350	354020
400	404020

M2

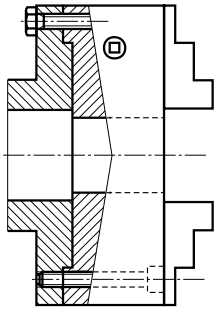

∅	Taper size	A	B	
100	3	104033	104043	
125	3	124033	124043	
125	4	124034	124044	
160	3	164033	164043	
160	4	164034	164044	
160	5	164035	164045	
200	3	204033	204043	
200	4	204034	204044	
200	5	204035	204045	
250	4	254034	254044	
250	5	254035	254045	
250	6	254036	254046	
250	8	254038	254048	
315	5	314035	314045	
315	6	314036	314046	
315	8	314038	314048	
350	6	354036	354046	
350	8	354038	354048	
350	11	354031	354041	
400	6	404036	404046	
400	8	404036	404048	
400	11	404031	404041	

DIN 55026
ISO 702/I
ČSN 20 1006

A

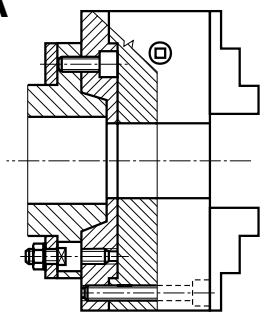

B

DIN 55027
ISO 702/III
ČSN 20 1011

∅	Taper size	C	D	
100	3	104053	104063	
125	3	124053	124063	
125	4	124054	124064	
160	3	164053	164063	
160	4	164054	164064	
160	5	164055	164065	
200	3	204053	204063	
200	4	204054	204064	
200	5	204055	204065	
250	4	254054	254064	
250	5	254055	254065	
250	6	254056	254066	
250	8	254058	254068	
315	5	314055	314065	
315	6	314056	314066	
315	8	314058	314068	
350	6	354056	354066	
350	8	354058	354068	
350	11	354051	354061	
400	6	404056	404066	
400	8	404056	404068	
400	11	404051	404061	

DIN 55029
ISO 702/II
ČSN 20 1018

C

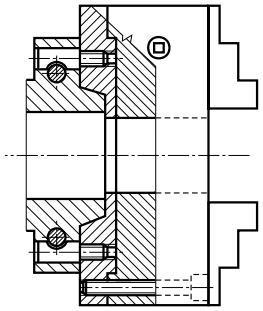

D

ISO 702/II
inch

Face plate with Independent adjustable jaws LUD

∅	E H7 kužele	F ±0,2 /mm/	G /mm/	H /mm/	J /mm/	K /mm/	O /mm/	P /mm/	R /mm/	S /mm/	T /mm/	U /mm/
85	62	72	-	34	17	6	20	4×7	25	4	42	11
100	70	83	-	41	17	6	20	4×9	25	4	42	15
125	95	108	-	51	19	8	21	4×9	28	4	44	15
160	125	140	4×M10	47	22	8	32	4×11	45	4	54	17
200	125	140	4×M10	75	32	12	44	4×11	50	4	72	17
250	200	224	4×M12	75	32	12	44	4×13	60	5	72	20
315	200	224	4×M12	100	36	14	49	4×13	75	5	80	20
350	260	286	-	100	37	14	60	4×13	75	5	91	20
400	260	286	-	100	37	14	60	4×13	75	5	91	20

∅	Taper size	E /mm/	F /mm/	G /mm/	J /mm/	K /mm/	O /mm/	R /mm/	S /mm/	T /mm/	V /mm/	W /mm/
100	3	53,9	70,6	12	17	6	35	25	10	57	M10	75
125	3	53,9	70,6	12	17	8	36	25	10	59	M10	75
125	4	63,5	82,6	12	19	8	41	28	10	64	M10	85
160	3	53,9	70,6	12	22	8	42,5	45	10	64,5	M10	75
160	4	63,5	82,6	12	22	8	42,5	45	10	64,5	M10	85
160	5	82,5	104,8	12	22	8	42,5	45	12	64,5	M10	104,8
200	3	53,9	70,6	12	32	12	59,5	50	10	87,5	M10	75
200	4	63,5	82,6	12	32	12	59,5	50	10	87,5	M10	85
200	5	82,5	104,8	12	32	12	59,5	50	12	87,5	M10	104,8
250	4	63,5	82,6	12	32	12	58,5	60	10	86,5	M10	85
250	5	82,5	104,8	12	32	12	58,5	60	12	86,5	M10	104,8
250	6	106,3	133,4	14	32	12	62,5	60	13	90,5	M12	133,4
250	8	139,7	171,4	18	32	12	62,5	60	14	90,5	M16	171,4
315	5	82,5	104,8	12	36	14	66,5	75	12	97,5	M10	104,8
315	6	106,3	133,4	14	36	14	66,5	75	13	97,5	M12	133,4
315	8	139,7	171,4	18	36	14	73,5	75	14	104,5	M16	171,4
350	6	106,3	133,4	14	37	14	77,5	75	13	108,5	M12	133,4
350	8	139,7	171,4	18	37	14	83,5	75	14	115,5	M16	171,4
350	11	196,8	235	22	37	14	83,5	75	16	115,5	M20	235
400	6	106,3	133,4	14	37	14	67,5	75	13	98,5	M12	133,4
400	8	139,7	171,4	18	37	14	67,5	75	14	98,5	M16	171,4
400	11	196,8	235	22	37	14	73,5	75	16	104,5	M20	235

∅	Taper size	E /mm/	F /mm/	G /mm/	J /mm/	K /mm/	O /mm/	R /mm/	S /mm/	T /mm/
100	3	53,9	70,6	14,3	17	6	46	25	10	68
125	3	53,9	70,6	14,3	17	8	43	25	10	66
125	4	63,5	82,6	15,9	19	8	45	28	10	68
160	3	53,9	70,6	14,3	22	8	55,5	45	10	77,5
160	4	63,5	82,6	15,9	22	8	55,5	45	10	77,5
160	5	82,5	104,8	19	22	8	57,5	45	12	79,5
200	3	53,9	70,6	14,3	32	12	67,5	50	10	95,5
200	4	63,5	82,6	15,9	32	12	67,5	50	10	95,5
200	5	82,5	104,8	19	32	12	73,5	50	12	102,5
250	4	63,5	82,6	15,9	32	12	68,5	60	10	96,5
250	5	82,5	104,8	19	32	12	68,5	60	12	96,5
250	6	106,3	133,4	22,2	32	12	76,5	60	13	104,5
250	8	139,7	171,4	25,4	32	12	76,5	60	14	104,5
315	5	82,5	104,8	19	36	14	78,5	75	12	109,5
315	6	106,3	133,4	22,2	36	14	78,5	75	13	109,5
315	8	139,7	171,4	25,4	36	14	78,5	75	14	119,5
350	6	106,3	133,4	22,2	37	14	89,5	75	13	120,5
350	8	139,7	171,4	25,4	37	14	99,5	75	14	130,5
350	11	196,8	235	30,2	37	14	99,5	75	16	130,5
400	6	106,3	133,4	22,2	37	14	92,5	75	13	123,5
400	8	139,7	171,4	25,4	37	14	92,5	75	14	123,5
400	11	196,8	235	30,2	37	14	99,5	75	16	130,5

LUD – WITH HARD REVERSIBLE JAWS LC

M2

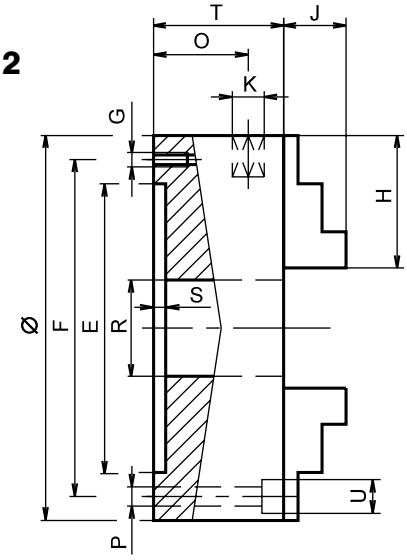

A DIN 55026
ISO 702/I
ČSN 20 1006

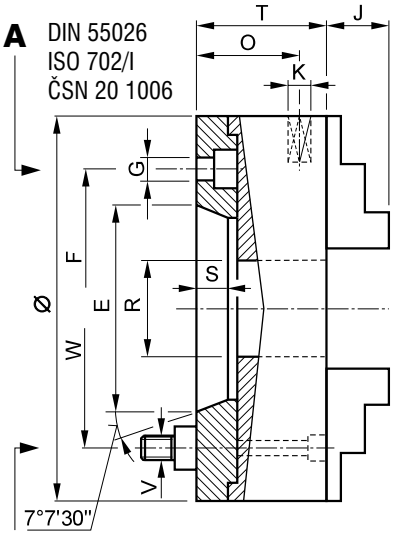

B DIN 55027, ISO 702/III, ČSN 20 1011

C DIN 55029, ISO 702/II
ČSN 20 1018

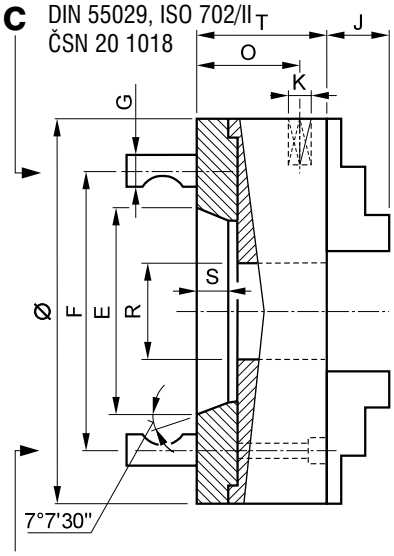

D ISO 702/II, inch

Universal Hobby-Chuck IUX

IUX – WITH HARD OUTSIDE SCV AND INSIDE SCN JAWS

M1

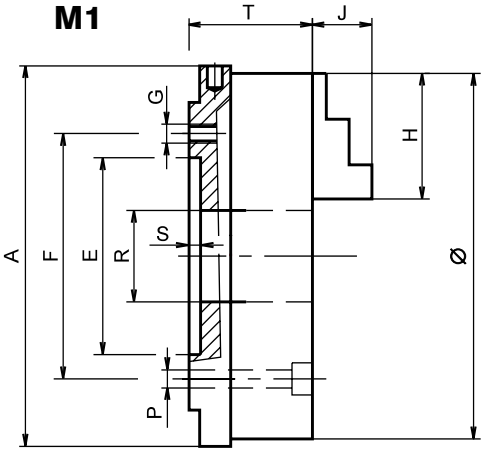

M2

∅		3	4	
65		000201		
70		000205		
110		000206	000207	
125			000300	

∅	Execusion	A /mm/	E H7 /mm/	F 0,2 /mm/	G /mm/	H /mm/	J /mm/	P /mm/	R /mm/	S /mm/	T /mm/
65	M2	65	30	26	-	32	13,3	3×5,3	15	3	34
70	M1	72	78	39	3×M6	36	13,3	-	15	3	33
110	M1	112	75	62	3×M8	42	18,3	-	26	3	38
125	M1	126	70	83	3×M8	42	17,4	-	30	3	46

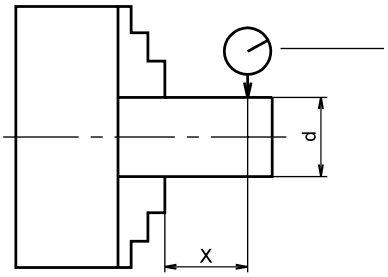

Geometrical accuracy

∅	↗	x /mm/	d /mm/
65	0,08	25	10
70	0,08	25	10
110	0,10	30	20
125	0,15	30	30

Maximum revolutions

∅	Max. speed (mim^{-1} / r.p.m.)
65	3000
70	3000
110	3000
125	3000

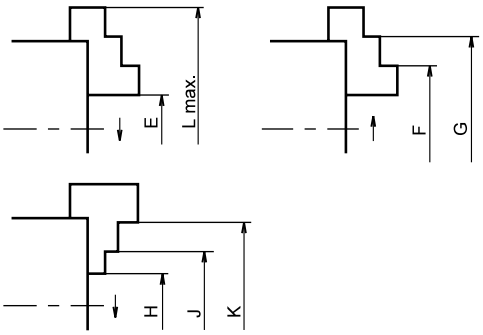

Chucking capacity

∅	E /mm/	F /mm/	G /mm/	H /mm/	J /mm/	K /mm/	L max. /mm/
65	3÷27	23÷48	48÷73	3÷27	27÷51	52÷76	92
70	3÷27	23÷48	48÷73	3÷27	27÷51	52÷76	98
110	3÷49	34÷70	68÷104	3÷49	40÷76	76÷110	132
125	3÷49	39÷75	73÷116	3÷49	46÷88	83÷125	147

Baseplate for Chuck IUX

∅	B /mm/	C /mm/	D /mm/	K /mm/	L /mm/	M /mm/	N /mm/
65	104	66	87	30	15	14	9
70	104	72	87	48	15	14	9
110	114	112	127	75	26	14	9
125	164	126	150	70	30	16	11

Special Accessories

FLANGES WITH SHORT TAPER, INTERMEDIATE FLANGES WITH THREAD

∅	Taper size	A	B	C	D
100	3	100033	100043	100053	100063
125	3	120033	120043	120053	120063
125	4	120034	120044	120054	120064
160	3	160033	160043	160053	160063
160	4	160034	160044	160054	160064
160	5	160035	160045	160055	160065
200	3	200033	200043	200053	200063
200	4	200034	200044	200054	200064
200	5	200035	200045	200055	200065
200	6	200036	200046	200056	200066
250	4	250034	250044	250054	250064
250	5	250035	250045	250055	250065
250	6	250036	250046	250056	250066
250	8	250038	250048	250058	250068
315	5	315035	315045	315055	315065
315	6	315036	315046	315056	315066
315	8	315038	315048	315058	315068
315	11	315031	315041	315051	315061
400	6	400036	400046	400056	400066
400	8	400038	400048	400058	400068
400	11	400031	400041	400051	400061

A

DIN 55026
ISO 702/I
ČSN 201006

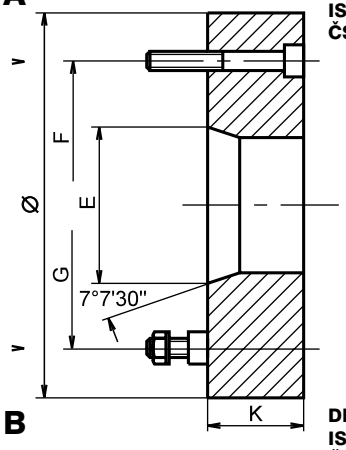

B

DIN 55027
ISO 702/III5
ČSN 201011

∅	Taper size	E /mm/	F /mm/	G /mm/	H /mm/	K /mm/
100	3	53,9	70,6	75	25,5	17,5
125	3	53,9	70,6	75	27,5	14,5
125	4	63,5	82,6	85	27,5	14,5
160	3	53,9	70,6	75	27,5	14,5
160	4	63,5	82,6	85	27,5	14,5
160	5	82,5	104,8	104,8	29,5	14,5
200	3	53,9	70,6	75	27,5	19,5
200	4	63,5	82,6	85	27,5	19,5
200	5	82,5	104,8	104,8	34,5	19,5
200	6	106,3	133,4	133,4	34,5	19,5
250	4	63,5	82,6	85	29,5	19,5
250	5	82,5	104,8	104,8	29,5	19,5
250	6	106,3	133,4	133,4	37,5	23,5
250	8	139,7	171,4	171,4	37,5	23,5
315	5	82,5	104,8	104,8	34,5	22,5
315	6	106,3	133,4	133,4	34,5	22,5
315	8	139,7	171,4	171,4	44,5	29,5
315	11	196,8	235	235	44,5	29,5
400	6	106,3	133,4	133,4	37,5	23,5
400	8	139,7	171,4	171,4	37,5	23,5
400	11	196,8	235	235	44,5	29,5

C

DIN 55029
ISO 702/II
ČSN 201018

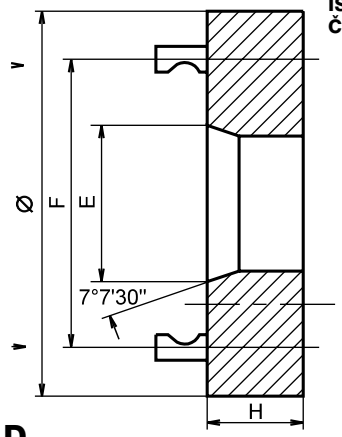

D

ISO 702/II inch

∅	Order number	A H5 /mm/	B /mm/	C /mm/	D /mm/	E /mm/	M
100	100071	25,781	55	39	12,7	18	1"-10 UNS-2B
100	120072	38,481	68	39	12,7	18	1 1/2"-8 UN-2B
125	120071	25,781	55	39	12,7	18	1"-10 UNS-2B
125	120072	38,481	68	39	12,7	18	1 1/2"-8 UN-2B
160	160072	38,481	68	39	12,7	18	1 1/2"-8 UN-2B
160	160073	57,404	81	45,5	15,9	18	2 1/4"-8 UN-2B
200	200072	38,481	68	39	12,7	18	1 1/2"-8 UN-2B
200	200073	57,404	81	45,5	15,9	22	2 1/4"-8 UN-2B
200	200074	60,579	110	52	19	25	2 3/8"-6 UN-2B
250	250074	60,579	110	52	19	25	2 3/8"-6 UN-2B
315	310075	70,104	110	52	19	25	2 3/4"-8 UN-2B

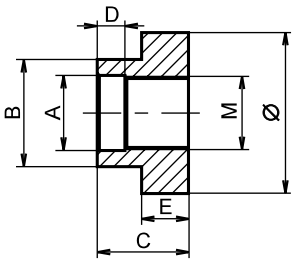

Special Accessories

SOLID HARD JAW – HARD OUTSIDE JAW SCV

SOLID HARD JAW – HARD OUTSIDE JAW SCN

∅	3 SUPERIOR	3 I.	4 SUPERIOR	4 I.	6 SUPERIOR	6 I.
80	083100	083200	084100	084200		
100	103100	103200	104100	104200		
125	123100	123200	124100	124200	126100	126200
160	163100	163200	164100	164200	166100	166200
200	203100	203200	204100	204200	206100	206200
250	253100	253200	254100	254200	256100	256200
315	313100	313200	314100	314200	316100	316200
400	403100	403200	404100	404200	406100	406200
500	503100		504100		506100	

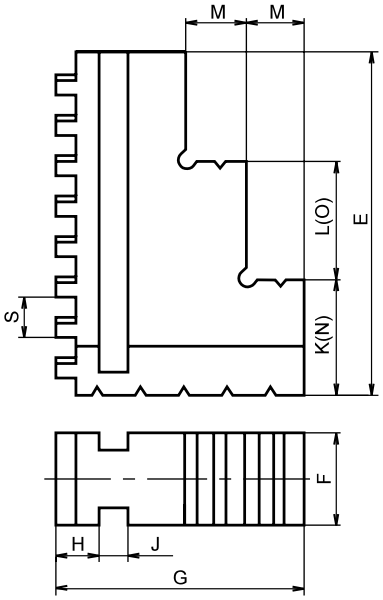

∅	E /mm/	F /mm/	G /mm/	H /mm/	J /mm/	K /mm/	L[1] /mm/	M /mm/	N[2] /mm/	O[2] /mm/	S /mm/
80	35,5	10	27	5,9	5	10,5	12,5	6	11	12,5	6
100	41,5	14	34	5,9	7	10,5	17	8	11	17	6
125	51,5	16	36	5,9	7	13	20,5	8	13,5	20,5	6
160	66	18	42	7,4	7	21,5	20,5	10	22	20,5	6
200	79	22	54	9,9	8	24,5	30	12	23,5	30	8
250	97,5	25	58	9,9	8	22,5	49	14	25	49	8
315	123	32	71	11,9	12	27,5	62	16	30,5	62	10
400	152,5	32	86	14,9	12	41,5	66	20	43	66	12
500	188,5	42	95	17,3	15	55,5	70	20	63	70	12

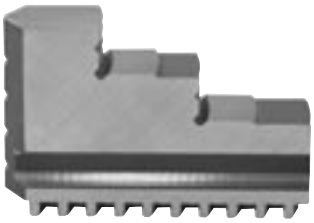

SOLID SOFT JAW MC – POINTED

∅	3	4	6
80	083300	084300	
100	103300	104300	
125	123300	124300	126300
160	163300	164300	166300
200	203300	204300	206300
250	253300	254300	256300
315	313300	314300	316300
400	403300	404300	406300
500	503300	504300	506300

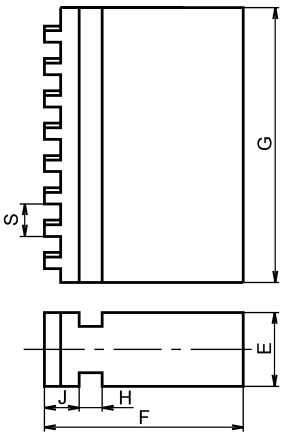

∅	E /mm/	F /mm/	G /mm/	H /mm/	J /mm/	S /mm/
80	10	27,9	37,2	5	5,9	6
100	14	34,9	43,2	7	5,9	6
125	16	36,9	53,2	7	5,9	6
160	18	43,1	67,9	7	7,4	6
200	22	55,1	75,9	8	9,9	8
250	25	59,1	99,4	8	9,9	8
315	32	72,4	124,0	12	11,9	10
400	32	87,7	153,5	12	14,9	12
500	42	95,0	190,0	15	17,3	12

Spare Parts

SOFT SECTIONAL JAW MD –
(BASE JAW SM AND SOFT JAW ND OR NC)

∅	2	3	4
100	102300	103300	104300
125	122300	123300	124300
160	162300	163300	164300
200	202300	203300	204300
250	252300	253300	254300
315	312300	313300	314300
400	402300	403300	404300
500	502300	503300	504300

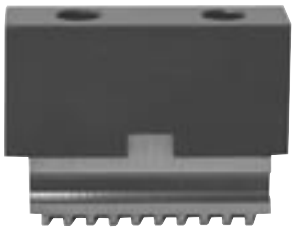

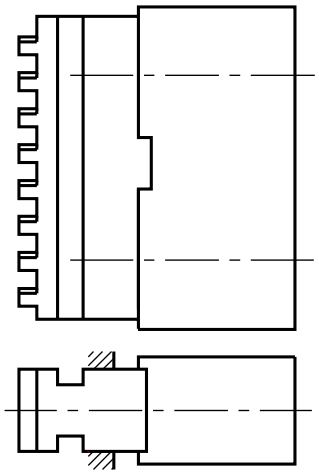

BASE JAW SM

∅	2	3	4
100	102000	103000	104000
125	122000	123000	124000
160	162000	163000	164000
200	202000	203000	204000
250	252000	253000	254000
315	312000	313000	314000
400	402000	403000	404000
500	502000	503000	504000

∅	E /mm/	F /mm/	G /mm/	H /mm/	J /mm/	K /mm/	L /mm/	M /mm/	N /mm/	O /mm/	S /mm/
100	43	14	25	16,5	10	3	5,3	M5	11	20	6
125	52	16	25	20,6	12	3	4,3	M5	10	28	6
160	64	18	26	26	12	3	4	M6	10	38	6
200	77	22	32	31,5	14	3	4	M10	15	48	8
250	101	25	32	43,5	14	3	4	M10	15	55	8
315	125	32	44	52,5	20	4	5	M12	18	60	10
400	150	32	48	65	20	4	5	M12	18	70	12
500	189	42	54	84,5	20	5	6	M16	20	90	12

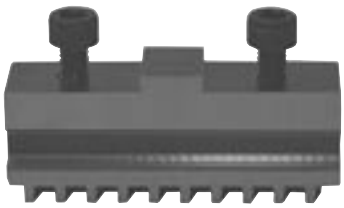

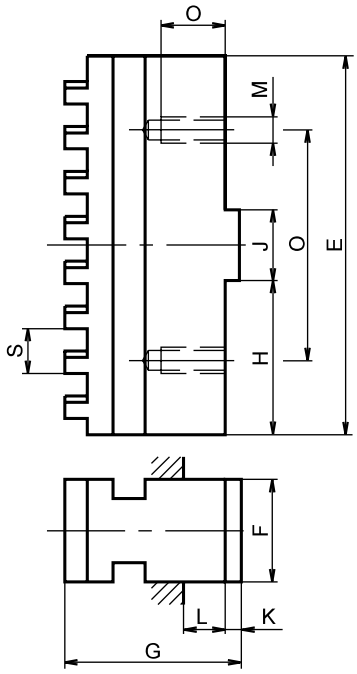

Spare Parts

SOFT TOP JAW ND AND NC

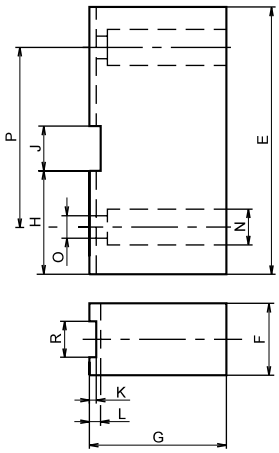

∅	2	3	4
100	102300	103300	104300
125	122300	123300	124300
160	162300	163300	164300
200	202300	203300	204300
250	252300	253300	254300
315	312300	313300	314300
400	402300	403300	404300
500	502300	503300	504300

∅	E /mm/	F[1] /mm/	F[2] /mm/	G[1] /mm/	G[2] /mm/	H /mm/	J /mm/	K /mm/	L /mm/
100	50	26	20	25	20	20	10	3	6,5
125	65	32	20	32	25	24	12	3	6,5
160	75	30	23	45	36	31,5	12	3	6,5
200	95	42	28	40	40	40,5	14	3	6,5
250	120	45	32	50	40	53	14	3	6,5
315	140	55	42	65	52	60	20	4	8,5
400	165	55	42	75	70	72,5	20	4	8,5
500	205	55	55	80	80	92,5	20	4	9,5

∅	N /mm/	O /mm/	P /mm/	R /mm/
100	10	5,3	20	14
125	10	5,3	28	16
160	11	6,4	38	18
200	18	10,5	48	22
250	18	10,5	55	25
315	20	13	60	32
400	20	13	70	32
500	26	17	90	42

[1] - for ND only
[2] - for NC only

SCROLL

∅		A /mm/		A /mm/		A /mm/
80	080000	30	080000	26,000		
100	100000	40	100000	34,000		
125	120000	50	120000	53,972		
160	160000	84	160000	69,847	160000	69,847
200	200000	100	200000	85,722	200000	85,722
250	250000	132	250000	120,647	250000	130,170
315	310000	168	310000	155,575	310000	155,575
400	400000	225	400000	180,000	400000	196,850
500	500000	270	500000	270,000		

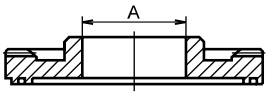

TYP 243881 pro IUG, IUH, IUGG, IUHG, IUGO, IUHO
TYP 243881 for IUG, IUH, IUGG, IUHG, IUGO, IUHO
TYP 243887 pro IUGS a IUHS
TYP 243887 for IUGS a IUHS

PASTOREK
PINION

∅		A /mm/	B /mm/		A /mm/	B /mm/		A /mm/	B /mm/
80	080000	20,0	28,5	080000	20,0	30,5			
100	100000	22,0	34,0	100000	22,0	37,0			
125	120000	22,0	43,0	120000	27,0	42,0			
160	160000	25,0	43,0	160000	28,6	51,0	160000	28,6	51,0
200	200000	27,0	59,0	200000	30,2	65,0	200000	30,2	65,0
250	250000	33,0	66,5	250000	33,4	78,0	250000	33,4	78,0
315	310000	40,0	84,0	310000	40,0	92,0	310000	34,9	92,0
400	400000	44,0	102,0	400000	44,0	122,0	400000	41,2	118,0
500	500000	44,0	129,0	500000	44,0	129,0			

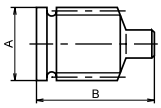

TYP 243882 pro IUG, IUH, IUGG, IUHG, IUGO, IUHO
TYP 243882 for IUG, IUH, IUGG, IUHG, IUGO, IUHO
TYP 243888 pro IUGS a IUHS
TYP 243888 for IUGS a IUHS

Spare Parts

REVERSIBLE JAW RC –
(BASE JAW ZC AND HARD REVERSIBLE TOP JAW NT)

∅	3	4	6
100	103000	104000	
125	123000	124000	126000
160	163000	164000	166000
200	203000	204000	206000
250	253000	254000	256000
315	313000	314000	316000
400	403000	404000	406000
500	503000	504000	506000

The clamping surfaces of top jaw are ground to special order only.

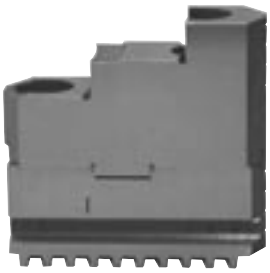

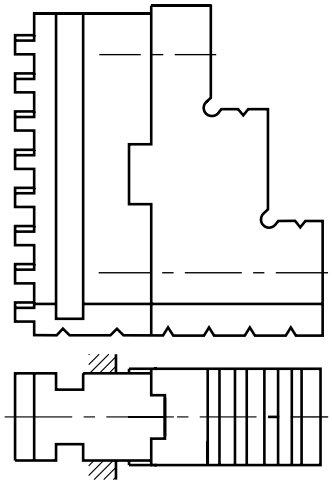

BASE JAW ZC

∅	3	4	6
100	103100	104100	
125	123100	124100	126100
160	163100	164100	166100
200	203100	204100	206100
250	253100	254100	256100
315	313100	314100	316100
400	403100	404100	406100
500	503100	504100	506100

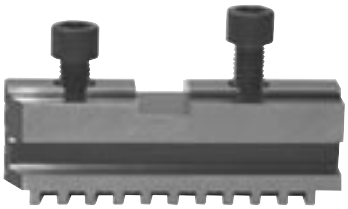

∅	E /mm/	F /mm/	G /mm/	H /mm/	J /mm/	K /mm/	L /mm/	M /mm/	N /mm/	O /mm//
100	43	14	26	19	9,5	3,2	2,6	6,4	M6	11
125	52	16	28	25	9,5	3,2	2,6	8,4	M6	15
160	65	18	32	29	12,67	4,1	3,6	9,4	M8	19
200	74,6	22	40	35	12,67	4,1	3,5	11,5	M8	22
250	89	25	40	40	19,03	4,1	3,5	11,5	M12	22
315	123	32	42	48	19,03	4,1	3,6	7,4	M12	25
400	124,5	32	54	57	19,03	7,1	3,2	14,9	M16	28
500	165	42	66,1	57 a 95	2×19	7,1	3,2	21,5	M20	32

∅	P /mm/	R /mm/	S /mm/
100	19	6,35	6
125	22,2	6,35	6
160	38	7,92	6
200	44,4	7,92	8
250	54	12,7	8
315	63,5	12,7	10
400	76	12,7	12
500	2×76	12,7	12

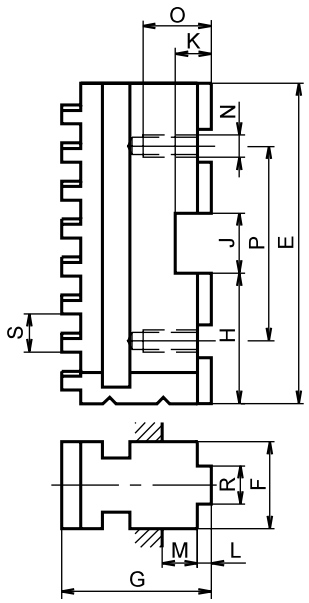

Spare Parts

HARD REVERSIBLE TOP JAW NT

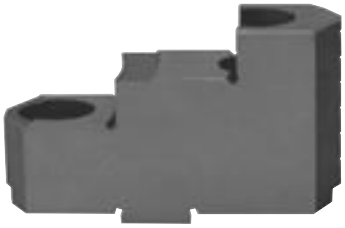

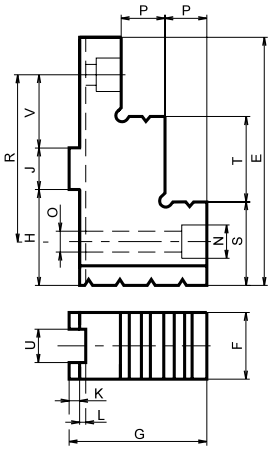

∅	3	4	6
100	103000	104000	
125	123000	124000	126000
160	163000	164000	166000
200	203000	204000	206000
250	253000	254000	256000
315	313000	314000	316000
400	403000	404000	406000
500	503000	504000	506000

∅	E /mm/	F /mm/	G /mm/	H /mm/	J /mm/	K /mm/	L /mm/	N /mm/
100	46,5	15,75	29	19	9,5	2,4	3,6	11
125	56	18,8	33,6	25	9,5	2,4	3,6	11
160	67	24,8	40	29	12,67	3	4,3	15
200	77	24,8	43	35	12,67	3	4,3	15
250	91	30	53	40	19,03	3	4,3	20
315	111	33	56	48	19,03	3	4,3	20
400	122	38	68	57	19,03	6,4	4,3	26
500	127	48	80	57	19,03	6,4	4,3	34

∅	O /mm/	P /mm/	R /mm/	S /mm/	T /mm/	U /mm/	V /mm/
100	6,4	7,1	19	11	17,5	6,4	4,76
125	6,4	8	22,2	13	20,6	6,4	6,35
160	8,4	9,5	38	16	28,6	7,95	12,7
200	8,4	10,3	44,4	20,3	29,4	7,95	15,87
250	13	12,7	54	27,5	31,8	12,7	17,5
315	13	14,3	63,5	29	39,7	12,7	22,2
400	17	16	76	47,5	34,1	12,7	28,6
500	21	20	76	52,5	32,8	12,7	28,6

The clamping surfaces of top jaw are ground to special order only.

SOFT TOP JAW NM

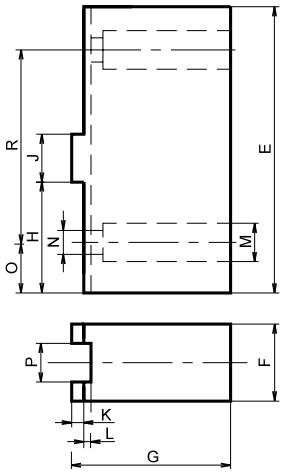

∅	3	4	6
100	103300	104300	
125	123300	124300	126300
160	163300	164300	166300
200	203300	204300	206300
250	253300	254300	256300
315	313300	314300	316300
400	403300	404300	406300
500	503300	504300	506300

∅	E /mm/	F /mm/	G /mm/	H /mm/	J /mm/	K /mm/	L /mm/	M /mm/
100	51	16	32	24	9,5	2,4	3,6	11
125	74	20	32	32	9,5	2,4	3,6	11
160	77	20	40	32	12,67	3	4,3	15
200	88	25	40	38	12,67	3	4,3	15
250	106	30	53	43	19	3	4,3	20
315	124	33	56	52	19	3	4,3	20
400	139	38	68	60	19	6,4	4,3	26
500	144	48	78	64	19	6,4	4,3	34

∅	N /mm/	O /mm/	P /mm/	R /mm/
100	6,4	19	6,4	19
125	6,4	26	6,4	22,2
160	8,4	19,5	7,95	38
200	8,4	22	7,95	44,4
250	13	26	12,7	54
315	13	30	12,7	63,5
400	17	32	12,7	76
500	21	36	12,7	76

Spare Parts

LOCKING PIN OF PINION

∅		G /mm/	D /mm/	L /mm/
80	080000	M5	4	34
100	100000	M5	4	34
125	120000	M6	4,7	40
160	160000	M6	4,7	40
200	200000	M6	4,7	40
250	250000	M6	4,7	45
315	310000	M8	6,3	50
400	400000	M10	8,1	66
500	500000	M10	8,1	66

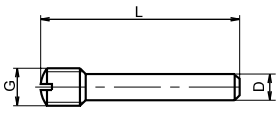

KEY WITH SPRING

∅		E /mm/	F /mm/	S /mm/
80	080000	105	65	6
100	100000	130	75	8
125	120000	170	95	8
160	160000	200	115	9
200	200000	260	145	11
250	250000	315	165	12
315	310000	350	180	14
400	400000	450	250	17
500	500000	450	250	17

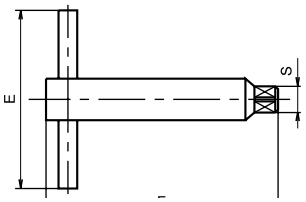

CLAMPING BOLTS

∅		243865	243877		243866
80	080000	M5×20	M5×20		
100	100000	M6×25	M8×25		
125	120000	M8×25	M8×25		
160	160000	M8×35	M10×35	160000	M8×60
200	200000	M10×35	M10×35	200000	M10×80
250	250000	M10×40	M12×45	250000	M10×80
315	310000	M12×45	M16×45	310000	M12×100
400	400000	M12×55	M16×55	400000	M12×110
500	500000	M16×60	M16×60	500000	M16×120

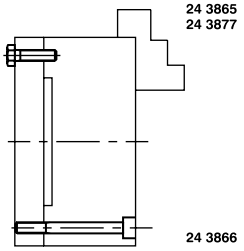

THREADED PIN AND NUT

Taper size		E /mm/
3	000043	M10
4	000044	M10
5	000045	M10
6	000046	M12
8	000048	M16
11	000041	M20

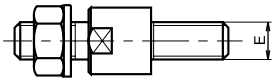

THREADEDR PIN AND NUT

Taper size		E /mm/	F /mm/		E /mm/	F /mm/
3	000053	M10×1	M6	000063	7/16"-20	1/4"-20
4	000054	M10×1	M6	000064	7/16"-20	1/4"-20
5	000055	M12×1	M6	000065	1/2"-20	1/4"-20
6	000056	M16×1,5	M8	000066	5/8"-18	5/16"-18
8	000058	M20×1,5	M8	000068	3/4"-16	5/16"-18
11	000051	M22×1,5	M8	000061	7/8"-14	5/16"-18

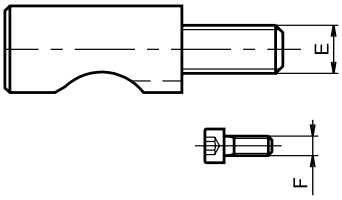

Spare Parts

HARD REVERSIBLE JAW LC FOR LUD

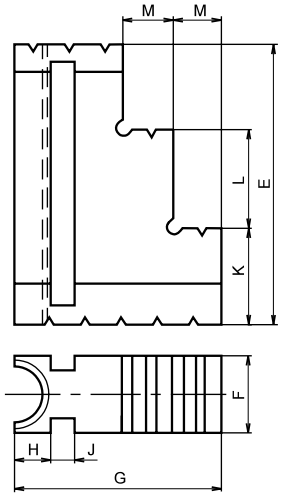

∅	4
85	080000
100	100000
125	120000
160	160000
200	200000
250	250000
315	310000
350	350000
400	400000

∅	E /mm/	F /mm/	G /mm/	H /mm/	J /mm/	K /mm/	L /mm/	M /mm/
85	34	14	34	5,9	7	9	9	8
100	41	14	34	5,9	7	10	12	8
125	54	16	36	5,9	7	10	12	8
160	47	24	39	8	10,3	12	12	8
200	75	32	54	11	12,3	20	28	12
250	75	32	54	11	12,3	20	28	12
315	100	36	63	12	15,3	32	35	14
350	100	36	63	12	15,3	32	35	14
400	100	36	63	12	15,3	32	35	14

CLAMPING BOLTS FOR LUD

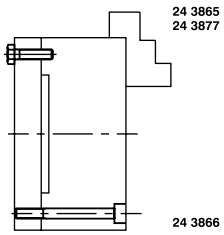

∅				
85	080000		080000	M6×50
100	100000		100000	M8×45
125	120000		120000	M8×50
160	160000	M10×35	160000	M10×50
200	200000	M10×35	200000	M10×70
250	250000	M12×40	250000	M12×70
315	310000	M12×40	310000	M12×80
350	350000		350000	M12×90
400	400000		400000	M12×90

THREADED PIN WITH NUT

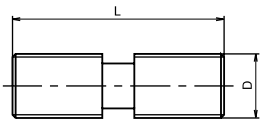

∅		D /mm/	L /mm/
85	080000	16	29
100	100000	16	37
125	120000	18	48
160	160000	17,9	56
200	200000	23,9	73
250	250000	23,9	93
315	310000	26,9	117
350	350000	26,9	135
400	400000	26,9	160

KEY WITH SPRING FOR LUD

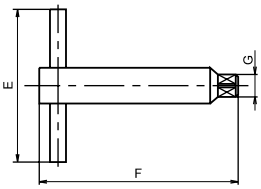

∅		E /mm/	F /mm/	G /mm/
85	080000	105	65	6
100	100000	105	65	6
125	120000	170	95	8
160	160000	150	130	8
200	200000	250	165	12
250	250000	250	165	12
315	310000	300	180	14
350	350000	300	180	14
400	400000	300	180	14

Spindlenoses with short taper

BASIC DIMENSIONS

Taper size	A /mm/	B /mm/	C1 /mm/	C2 /mm/	D /mm/	E1 /mm/	E2 /mm/	F1 /mm/	F2 /mm/
3	92	53,975	11	-	16	3×M10	-	70,6	-
4	108	63,513	11	-	20	11×M10	-	82,5	-
5	133	82,563	13	14,288	22	11×M10	8×M10	104,8	61,9
6	165	106,375	14	15,875	25	11×M12	8×M12	133,4	82,6
8	210	139,719	16	17,462	28	11×M16	8×M16	171,4	111,1
11	280	196,869	18	19,050	35	11×M20	8×M20	235,0	165,1

From taper size 4 with driver

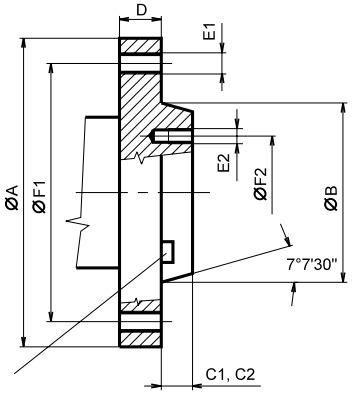

BASIC DIMENSIONS

Taper size	A /mm/	B /mm/	C /mm/	D /mm/	E /mm/	F /mm/
3	102	53,975	11	16	3×21	75,0
4	112	63,513	11	20	3×21	85,0
5	135	82,563	13	22	4×21	104,8
6	170	106,375	14	25	4×23	133,4
8	220	139,719	16	28	4×29	171,4
11	290	196,869	18	35	6×36	235,0

From taper size 4 with driver

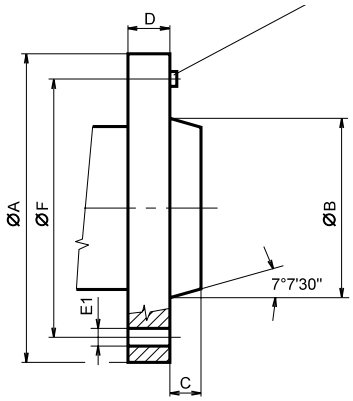

BASIC DIMENSIONS

Taper size	A /mm/	B /mm/	C /mm/	D /mm/	E /mm/	F /mm/
3	92	53,975	11	32	3×15,4	70,6
4	117	63,513	11	34	3×16,7	82,6
5	146	82,563	13	38	6×19,8	104,8
6	181	106,375	14	45	6×23,0	133,4
8	225	139,719	16	50	6×26,2	171,4
11	298	196,869	18	60	6×31,0	235,0

From taper size 4 with driver

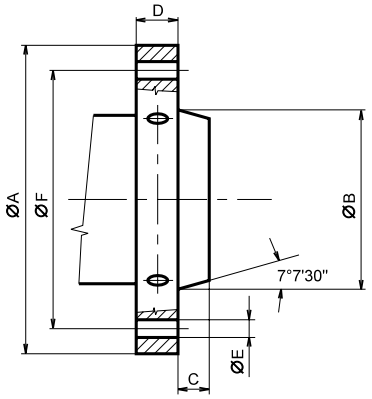

Open Centre Power Chuck SSA, SSC

CHUCKS BASIC DIMENSIONS

∅	A /mm/	B (H6) /mm/	C /mm/	E /mm/	F /mm/	G /mm/	H /mm/	K /mm/	L /mm/
SSA 160	160	140	104,8	58	M50×1,5	11	16	14	86
SSC 175	175	16	133,4	70	M62×1,5	13	16	14	86
SSA 200	200	170	133,4	68	M60×1,5	13	20	16	105
SSC 210	210	170	133,4	78	M72×1,5	13	20	16	105
SSC 250	250	220	171,4	93	M85×2	17	23	17	116
SSC 315	315	300	235	144	M130×2	21	24	18	126

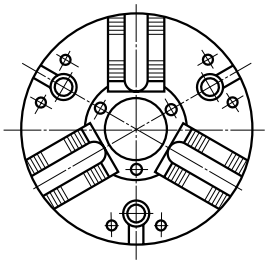

∅	N /mm/	O /mm/	P /mm/	R /mm/	a /mm/	b /mm/	c /mm/	d /mm/	e /mm/
SSA 160	42	3,4	1	M10	14	49	1/16"×90°	M6	19
SSC 175	56	3,4	1	M10	17	49	1/16"×90°	M6	19
SSA 200	54	4,3	1	M12	17	59	1/16"×90°	M6	19
SSC 210	66	4,3	1	M12	17	58	1/16"×90°	M6	19
SSC 250	78	4,9	1	M16	19	72	1/16"×90°	M8	25
SSC 315	120	5,1	1	M16	28	82	1/16"×90°	M8	28

∅	h (H7) /mm/	m /mm/	p /mm/	r /mm/	s /mm/	t /mm/	v /mm/	w /mm/	z /mm/
SSA 160	14	32	-	-	68	14	-	36	4
SSC 175	14	32	-	-	76	14	-	36	4
SSA 200	17	38	58	82	94	14	34	40	5
SSC 210	17	38	58	82	94	14	34	40	5
SSC 250	21	46	72	102	114	16	42	50	5
SSC 315	21	46	100	-	144	20	-	54	5

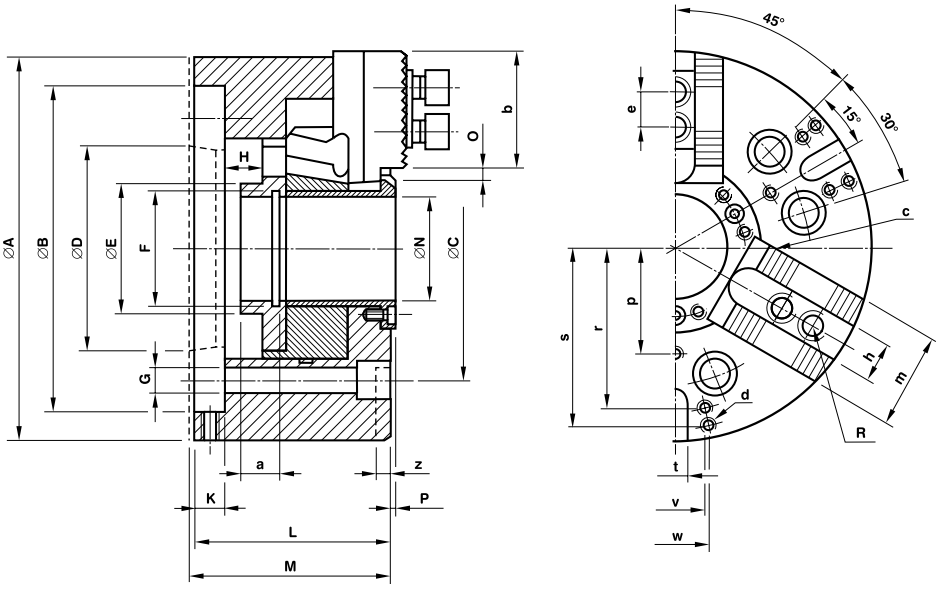

CHUCKS BASIC DIMENSIONS WITH SHORT TAPER

∅	A4 D	A4 M	A5 D	A5 M	A6 D	A6 M	A8 D	A8 M	A11 D	A11 M
SSA 160	63,513	89	82,653	89	-	-	-	-	-	-
SSC 175	-	-	82,653	92	106,375	89	-	-	-	-
SSA 200	-	-	82,653	89	106,375	107	-	-	-	-
SSC 210	-	-	-	-	106,375	107	139,719	129	-	-
SSC 250	-	-	-	-	106,375	123	139,719	119	-	-
SSC 315	-	-	-	-	-	-	139,719	142	196,869	129

Open Centre Power Chuck SSA, SSC

OPEN CENTRE POWER CHUCK SSA, SSC

∅			
160	M1	91163110	
175	M1		92173110
200	M1	91203110	
210	M1		92213110
250	M1		92253110
315	M1		92313110

Example of order: CODE 243891 200M1 /91203110/ SSA

HARD REVERSIBLE TOP JAWS

∅			
160		93163000	
175			94173000
200		93203000	
210			94213000
250			94253000
315			94313000

EXTENDED T-NUT

∅			
160		99160000	
175			101170000
200		99200000	
210			101210000
250			101250000
315			101310000

SOFT REVERSIBLE JAW

∅			
160		95163000	
175			96173000
200		95203000	
210			96213000
250			96253000
315			96313000

T-NUTS

∅			
160		100160000	
175			102170000
200		100200000	
210			102210000
250			102250000
315			102310000

ADAPTORS

∅	Taper size		
160	A4	97160035	
160	A5	97160035	
175	A4		98170034
175	A5		98170035
200	A4	97200035	
200	A5	97200036	
200	A8	97200038	
210	A4		98200036
210	A5		98200036
210	A8		98200036
250	A6		98250036
250	A8		98250038
315	A11		98310031

STOP

∅			
160		106160000	
175			104170000
200		106200000	
210			104210000
250			104250000
315			104310000

Open Centre Power Chuck SSA, SSC

HARD TOP JAWS

∅	A /mm/	B /mm/	C /mm/	D (H7) /mm/	E /mm/	F /mm/	G /mm/	H /mm/	J /mm/
SSA 160	68	32	42	14	4,5	17	19	1/16"	11
SSC 175	68	32	42	14	4,5	17	19	1/16"	11
SSA 200	75	38	50	17	4,5	21	19	1/16"	13
SSC 210	85	38	50	17	4,5	24	19	1/16"	13
SSC 250	105	46	58	21	5	33	25	1/16"	17
SSC 315	120	50	58	21	5	35	25	1/16"	17

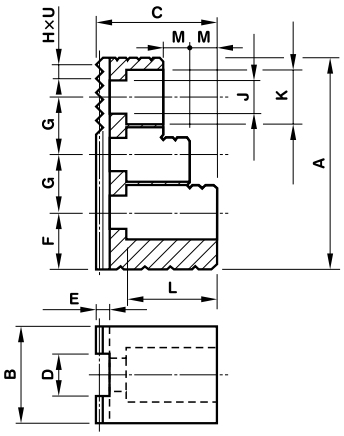

∅	K /mm/	L /mm/	M /mm/	U /mm/
SSA 160	18	32	10	90°
SSC 175	18	32	10	90°
SSA 200	20	38	12	90°
SSC 210	20	38	12	90°
SSC 250	26	45	14	90°
SSC 315	26	45	14	90°

SOFT TOP JAWS

∅	A /mm/	B /mm/	C /mm/	D (H8) /mm/	E /mm/	F /mm/	G /mm/	H /mm/	J /mm/
SSA 160	70	32	42	14	4,5	38	19	1/16"	11
SSC 175	70	32	42	14	4,5	38	19	1/16"	11
SSA 200	78	38	50	17	4,5	43	19	1/16"	13
SSC 210	90	38	50	17	4,5	48	19	1/16"	13
SSC 250	110	46	58	21	5	58	25	1/16"	17
SSC 315	124	50	60	21	5	70	25	1/16"	17

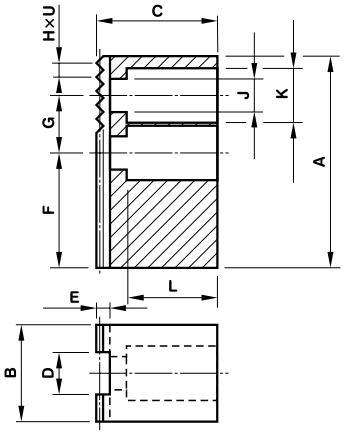

∅	K /mm/	L /mm/	U /mm/
SSA 160	18	30	90°
SSC 175	18	30	90°
SSA 200	20	38	90°
SSC 210	20	38	90°
SSC 250	26	44	90°
SSC 315	26	45	90°

CLAMPING RANGES

∅	A1 /mm/	A2 /mm/	A3 /mm/	A4 /mm/	J1 /mm/	J2 /mm/	J3 /mm/
SSA 160	12÷82	24÷90	72÷140	110÷182	58÷126	104÷170	150÷214
SSC 175	20÷102	34÷110	86÷160	132÷204	72÷142	118÷190	162÷230
SSA 200	15÷106	24÷110	82÷170	134÷222	66÷158	116÷208	168÷258
SSC 210	24÷108	28÷120	92÷170	152÷232	84÷160	142÷220	196÷276
SSC 250	24÷124	48÷150	120÷208	204÷298	84÷172	164÷264	234÷334
SSC 315	70÷184	74÷186	150÷264	248÷366	134÷246	200÷328	308÷386

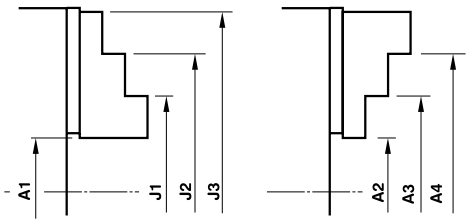

Open Centre Power Chuck SSA, SSC

TECHNICAL SUMMARY

Chuck Size	SSA 160	SSC 175	SSA 200	SSC 210	SSC 250	SSC 315
Maximum Input Force /kN/	30	30	40	40	55	60
Total Static Gripping Force /kN/	65	65	100	100	130	140
Max. revolutions /rpm/	6200	6200	5200	5200	4200	3200
Jaw Stroke /mm/	3,4	3,4	4,3	4,3	4,9	5,1
Sleeve Stroke /mm/	16	16	20	20	23	24
Max. Bore /mm/	42	56	54	66	78	120
Mass /kg/	10	12	20	24	34	54

POWER CHUCK GRIP CHARTS

Static Gripping Force

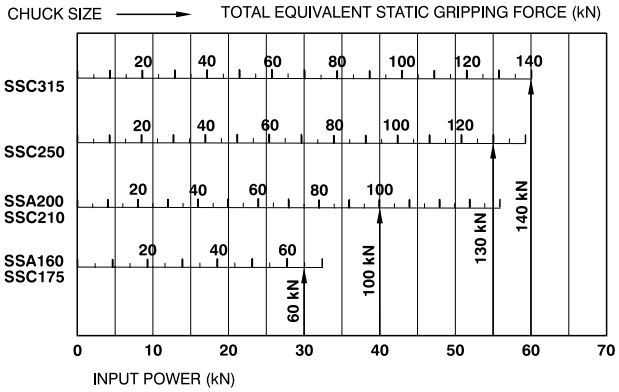

Loss of Gripping Force

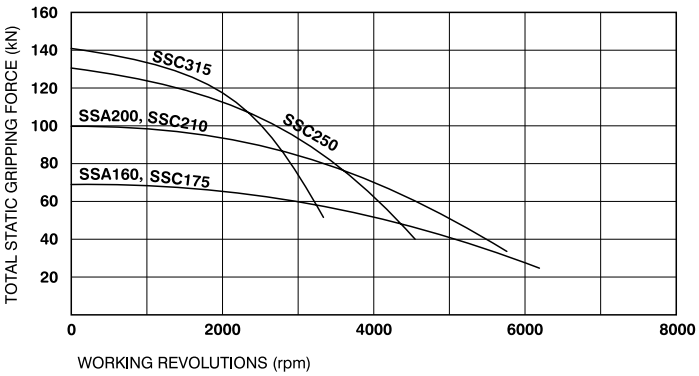

Machine vices

MACHINE VICES WITH ADJUSTABLE SHIFTING JAW

B /mm/	h /mm/	t /mm/	h_1 /mm/	b /mm/	b_1 /mm/	l_{max} /mm/	l_1 /mm/	l_2 /mm/	s /mm/	⌗	M_{kmax} /Nm/	Fu /N/	kg	
100	32	100	88	132	70	150	252	277	14	19	53	20000	11,0	100
125	40	140	106	170	90	160	310	335	14	19	95	35000	20,0	125
160	50	158	133	190	120	200	377	416	18	24	112	40000	33,0	160
200	63	220	160	260	145	280	470	513	22	24	141	50000	64,0	200
250	80	266	190	306	180	360	574	600	22	24	210	70000	115,0	250

M_{kmax} - Maximum permissible torque on bolt
Fu - Clamping force at reaching M_{kmax}

Vice bodies and shifting jaws of all sizes are made of steel or cast steel with minimal tensile strenght 490 MPa. The vices can be modified to swivel ones by using swivelling bases 24 3132. The vices are delivered with groved jaw inserts 24 3164 and with crank 24 3168. Swivelling bases 24 3132, smooth jaw inserts 24 3165 and prismatic jaw inserts 24 3166, adjustable stops 24 3169, guiding inserts 24 3595 are to be ordered separately.

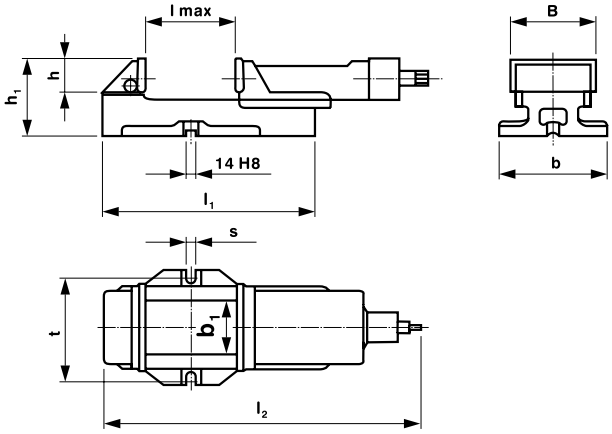

JAW TYPE SELF CENTRING MACHINE VICES

B /mm/	d	d_1	d_2	h /mm/	b /mm/	b_1 /mm/	l_1 /mm/	t /mm/	s /mm/	M_{kmax} /Nm/	Fu /N/	kg	
125	5-20	12-48	28-110	146	170	85	280	140	14	100	10000	24,0	125
200	-	25-100	46-180	230	280	145	280	232	22	350	35000	88,0	200

M_{kmax} - Maximum permissible torque on bolt
Fu - Clamping force at reaching M_{kmax}

Vice's jaws B 125 have horizontal prismatic grooves according to picture. Vice's jaws B 200 have on both sides one horizontal and one vertical prismatic grove.

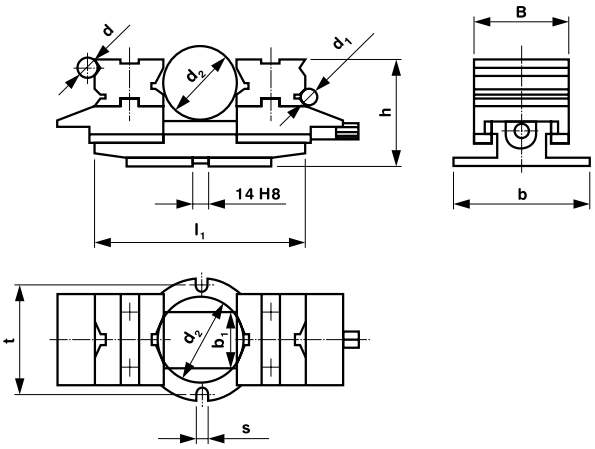

Machine vices

SWIVELLING AND TILTING MACHINE VICES

B /mm/	h /mm/	t /mm/	h_1 /mm/	b /mm/	b_1 /mm/	l_{max} /mm/	l_1 /mm/	l_2 /mm/	s /mm/	⌖	M_{kmax} /Nm/	Fu /N/	kg	
100	32	194	145	160	70	105	220	293	14	19	34	15000	17,0	100
125	40	220	172	200	90	115	250	354	14	19	75	30000	32,0	125
160	50	268	202	235	120	130	300	417	18	24	105	40000	48,0	160
200	63	334	261	300	145	170	364	558	22	24	130	50000	99,0	200

M_{kmax} - Maximum permissible torque on bolt

Fu - Clamping force at reaching M_{kmax}

Vice's body can be tilted in vertical level in one direc-tion from stop position (from zero position) mostly to about 60°.

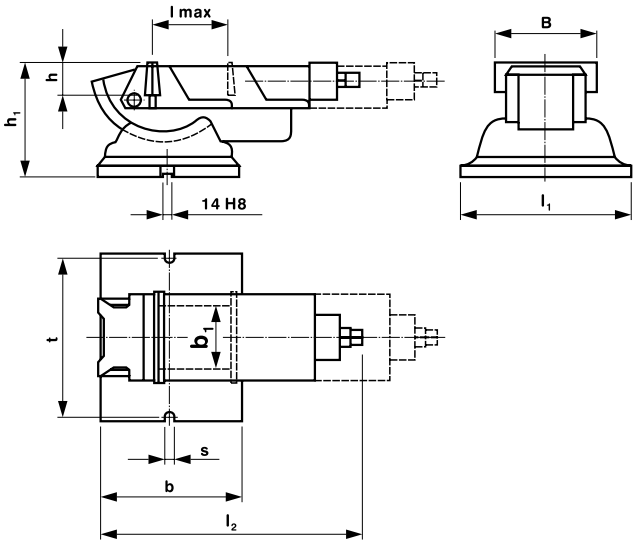

HAND MECHANICAL VICES

Type	A /mm/	B /mm/	C /mm/	D /mm/	E /mm/	F /mm/	G /mm/	H /mm/	I /mm/	J /mm/	kg	
PS - 80	80	80	287	179	55	130	8	28	61	13	3,4	PS-80
PS - 100	100	100	370	241	75	165	8	40	80	14	8,0	PS-100
PS - 125	125	125	402	262	75	168	8	40	90	14	9,2	PS-125

The hand mechanical vice is used to clamp work-pieces in different position when precison work is required. The jaws of the vice are hardened, on all clamping surfaces ground and provided with pris-matic grooves for clamping rotation - workpieces.

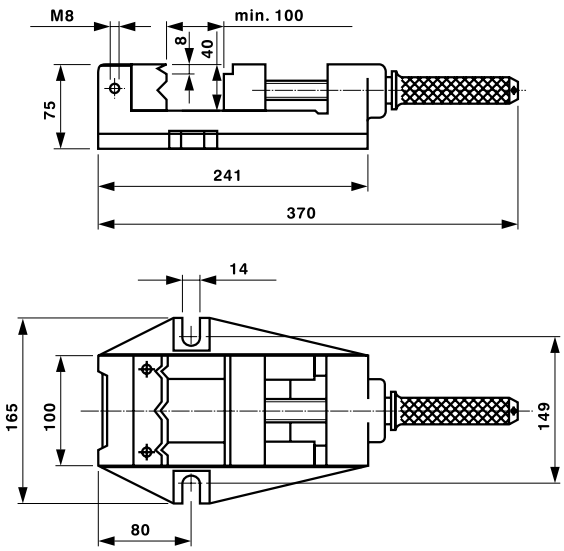

Machine vices

TURN TABLES FOR MACHINE VICES

Turntable	D	D1	d	a	b	h	h1	l	s	t	t1	t2	L	kg	vice B	
100	150	100	16	14	163	29	11	220	14	194	-	-	220	3,4	100	100
125	190	140	25	14	205	32	14	250	14	220	-	-	250	5,8	125	125
160	220	160	25	18	235	38	16	300	18	268	-	-	300	9,8	160	160
200	280	220	30	22	300	46	21	364	22	334	140	228	364	23,0	200	200
250	350	264	30	22	370	48	22	450	22	412	180	253	450	36,0	250	250

Turn-tables are delivered with fastening bolts 02 1124, nuts 02 1401, washers 02 1702.12 and pressed on cylidrical centring pin 24 3670.

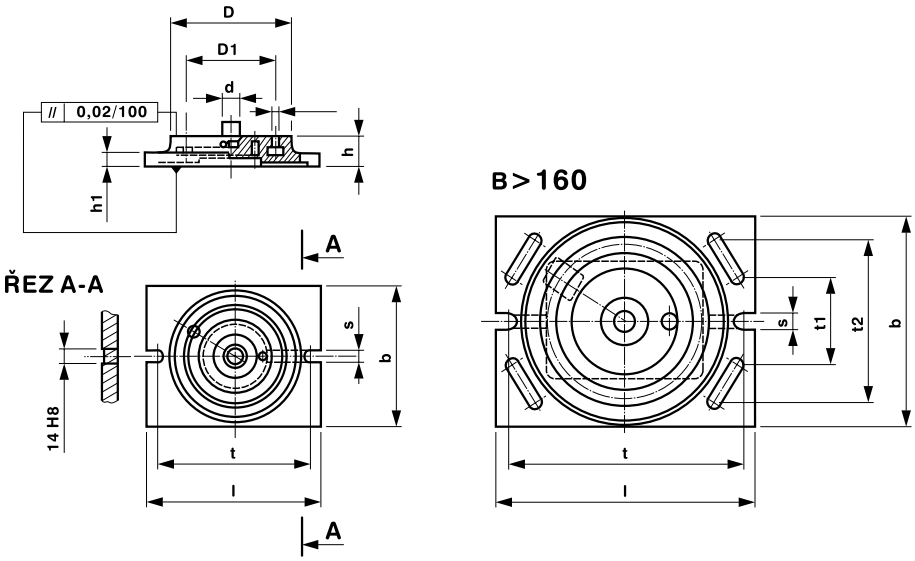

GROOVED INSERTS OF MACHINE VICES JAWS

B /mm/	h /mm/	b /mm/	h_1 /mm/	t /mm/	c /mm/	d /mm/	kg	
100	32	12	14	63	18,5	8,4	0,26	100
125	40	14	16	80	22,5	10,5	0,46	125
160	50	16	20	100	30	10,5	0,81	160
200	63	20	25	125	37,5	13	2,0	200
250	80	26	32	160	45	17	3,7	250

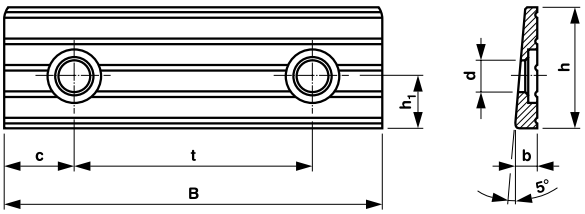

PLAIN FACE PLATES OF MACHINE VICE JAWS

B /mm/	h /mm/	b /mm/	h_1 /mm/	t /mm/	c /mm/	d /mm/	kg	
100	32	12	14	63	18,5	8,4	0,26	100
125	40	14	16	80	22,5	10,5	0,46	125
160	50	16	20	100	30	10,5	0,81	160
200	63	20	25	125	37,5	13	2,0	200
250	80	26	32	160	45	17	3,7	250

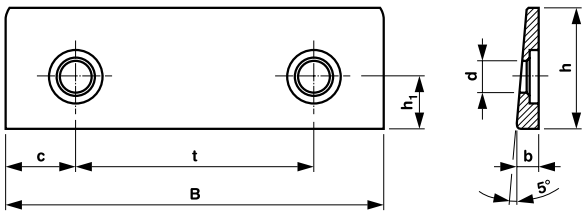

Machine and workmanschip bench vices

B /mm/	h /mm/	b /mm/	e /mm/	f /mm/	
125	40	24	12÷32	5÷12	125
160	50	30	18÷40	6÷18	160
200	63	35	20÷54	10÷20	200
250	80	45	24÷60	14÷26	250

PRISMATIC FACE INSERTS OF MACHINE VICES JAWS

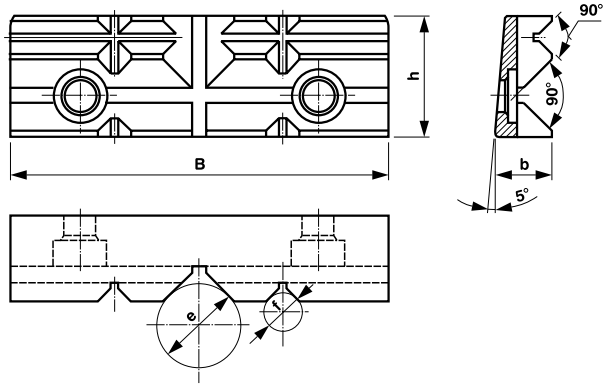

Type	b /mm/	s /mm/	kg	
YORK 063	63	55	4,0	63
YORK 080	80	70	6,0	80
YORK 100	100	105	12,5	100
YORK 125	125	115	20,0	125
YORK 150	150	125	30,0	150
TITAN 200	200	200	40,0	200 TITAN
TITAN 250	250	200	45,0	250 TITAN

WORKMANSHIP BENCH VICES

Profesional workmanship bench vice swivelling ±35°, quality steel jaws hardened to 52÷54 HRC, fastened to base plate by nuts. Colour: red.

Type	b /mm/	s /mm/	kg	
KASPER 80	80	100	7,9	80
KASPER 100	100	120	12,8	100
KASPER 125	125	155	21,9	125
KASPER 135	135	175	27,5	135
KASPER 150	150	210	37,5	150

Workmanship BENCH VICES

Vices KASPER are made from cast iron are used in machinest's workshops. Fast and mobile part are fit prismatic together, that ensure exact and fast lead. Vice KASPER is provided with hardened jaws and it has a big anvil.

General purpose indexing heads

GENERAL PURPOSE INDEXING HEAD – DU

Technical specifications	DU 200 A	DU 250 A	DU 320 A	DU 400 A
Workpiece diameter (d max)	200	250	320	400
Centre hight (h)	105	130	170	210
Width of centering groove (e)	14	14/18	18	22
Lenght/width of basic (a/b)	213/155	242/180	242/180	365/256
Spindle drift from zero position	-10°÷100°	-10°÷100°	-10°÷100°	-10°÷100°
Spindle taper MORSE/steep	4/40	4/40	4/40	6/50
Spindle hole diameter (mm)	22	28	28	50
Error for direct dividing	±30 sek.	±30 sek.	±30 sek.	±30 sek.
Run-out cone in spindle	0,01	0,01	0,01	0,01

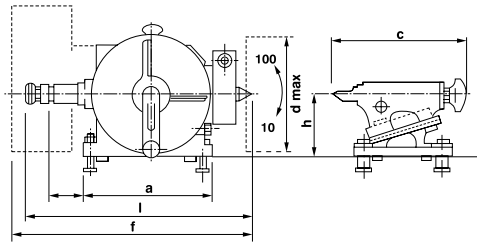

They are used to clamp workpieces on milling machines, especially those ones demanding to be turned throught the given angle not only between machining operation but also during machining as well. General purpose indexing heads are designed for single indirect, simple and differential indexing. Clamping lenght is limited only by working length of the machine table. Heads are attached on the left side of the milling machine working table. Standard type indexing heads with MORSE-typer spindle. Production of 4 types (DU 200÷400). A wide range of standard and special attachment is delivered with dividing heads (VK 200÷400; KD 200÷400; ZL 200÷400; PA 200÷400).

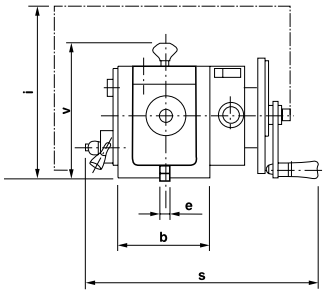

Special accessories	
hight headstocks	VK 200÷400
cross plate	KD 200÷400
gear quadrant	ZL 200÷400
Support	PA 200÷400

SIMPLE DIVIDING HEAD – DJ

Technical specifications	DJ 200 A	DJ 250 A	DJ 320 A
Workpiece diameter (d max)	200	250	320
Centre hight (h)	105	130	170
Width of centering groove (e)	14	14/18	18
Lenght/width of basic (a/b)	213/155	242/180	242/180
Spindle drift from zero position	-10°÷100°	-10°÷100°	-10°÷100°
Spindle taper MORSE/steep	4/40	4/40	4/40
Spindle hole diameter (mm)	22	28	28
Error for direct dividing	±30 sek.	±30 sek.	±30 sek.
Run-out cone in spindle	0,01	0,01	0,01

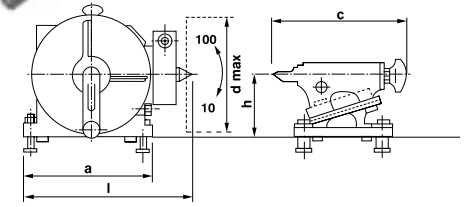

They are used to clamp workpieces on milling ma-chines, especially those ones demanding to be turned throught the given angle between two machine opera-tions. Dividing heads are designed for single indexing and indirect indexing. Heads are attached on the left side of the longitudinal working table of the milling machine. Standard type of dividing heads supplied with MORSE-taper spindle. Production of 3 types (DU 200÷320).

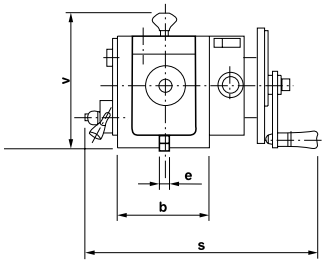

Rotary tables

MECHANICAL ROTARY TABLES – IMF

Technical specifications	IMF 320	IMF 400	IMF 500
Clamping plate diameter	320	400	500
Centring diam. in clamping plate	35H7	40H7	45H7
Width of clamping groove (mm)	14H12	18H12	18H12
Accuracy of the locating by direct dividing	15"	15"	15"
Parallelity of the clamping desk and base	0,015	0,02	0,02
Alignment of the centring diam. and axis of the turning	0,02	0,02	0,02
Height of the rotary table (mm)	135	160	190
Max. workpiece weight (kg)	200	320	500
Rotary table weight (kg)	90	160	250

They are applicable on milling machines having feeding mechanism-outlet for driving the attachment. These rotary tables are used to machine surfaces or annular grooves, slots both intermittent and continu-ous and to drill holes along the circle under arbitrury angle and diameter. Circular rotary plate is driven mechanically or manually with exact indexing accord-ing to nonius and with possibility of rotary plate fixing in given position.

HAND ROTARY TABLES – IRU

Technical specifications	IRU 250	IRU 320	IRU 400
Clamping plate diameter	250	320	400
Centring diam. in clamping plate	25H7	35H7	40H7
Width of clamping groove (mm)	14H7	14H12	18H12
Accuracy of the locating by direct dividing	15"	15"	15"
Parallelity of the clamping desk and base	0,015	0,015	0,02
Alignment of the centring diam. and axis of the turning	0,02	0,02	0,02
Height of the rotary table (mm)	105	135	160
Max. workpiece weight (kg)	80	200	320
Rotary table weight (kg)	45	90	150

They are used for vertical and horizontal milling machines. They can work on boring, drilling and likewise machines as well. This rotary tables are used to machine surfaces or annular grooves, slots both intermittent and continuous and to drill holes on the circle defined by both angle and by the pitch.

CROSS TABLES – KSU

Technical specifications	KSU 160	KSU 300
Width×lenght	160×350 160×450	300×500 300×600
Height	95	130
Groove width	12	14
Groove tpitch / Nr.	50/3	100/3
Feed X	190; 290	265; 365
Feed Y	140	200

Tables building block oriented enables wide utiliza-tion in various machining areas mainly as accessory equipment for milling, drilling and boring machines etc. Standard types delivered with manual hand-ling by trapezoidal screw. Tables are provided with arrestment, setting stops and dial indicator holder. Construction solution enables to use motoric drive with ball screw without large changes.

LINEAR TABLES – LST

Technical specifications	LST 160	LST 300
Width×lenght	160×350 160×450	300×500 300×600
Height	92	126
Groove width	12	14
Groove pitch / Nr.	50/3	100/3
Feed X	170; 270	300; 400

Tables building block oriented enables wide utiliza-tion in various machining areas mainly as accessory equipment for milling, drilling and boring machines etc. Standard types delivered with manual hand-ling by trapezoidal screw. Tables are provided with arrestment, setting stops and dial indicator holder. Construction solution enables to use motoric drive with ball screw without large changes.

Magnetic fixtures

MAGNETY

Cat. Nr.	Rozměr L×W×H /mm/ Dimension L×W×H /mm/	kg	
1101017	175×100×43	7,0	175×100×43
1101020	200×100×43	8,0	200×100×43
1101025	250×100×43	13,6	250×100×43
1101325	255×130×51	15,0	255×130×51
1101515	150×150×51	10,0	150×150×51
1101525	250×150×51	15,5	250×150×51
1101530	300×150×51	20,0	300×150×5
1101535	350×150×51	23,0	350×150×51
1101540	400×150×51	25,5	400×150×51
1101545	450×150×56	30,0	450×150×56
1102040	400×200×56	35,0	400×200×56
1102050	500×200×56	44,0	500×200×56
1102060	600×200×56	52,5	600×200×56
1102550	500×250×65	58,5	500×250×65
1103050	500×300×65	70,0	500×300×65
1103060	600×300×65	84,0	600×300×65

Specifications:
- neodym magnets
- pole pitch 5/6 mm
- with sockets hexagon wrench
- pole plate soldered with silver solder
- waterproof construction allowed dipping in dielectric - stable construction

Application:
- fixture for grinding small and middle parts

WALMAG FIXTURES – PERMA "GRIP"
(POLE PITCH 15 MM)

Dimension / mm×mm/	Pitch /mm/	kg	
130×260	15		130×260
150×130	15		150×300
150×355	15		150×335
200×450	15		200×450
175×100	43	7,0	175×100×43
200×100	43	8,0	200×100×43
250×100	43	13,6	250×100×43
255×130	51	15,0	255×130×51
150×150	51	10,0	150×150×51
250×150	51	15,5	250×150×51
300×150	51	20,0	300×150×5
350×150	51	23,0	350×150×51
400×150	51	25,5	400×150×51
450×150	56	30,0	450×150×56
400×200	56	35,0	400×200×56
500×200	56	44,0	500×200×56
600×200	56	52,5	600×200×56
500×250	65	58,5	500×250×65
500×300	65	70,0	500×300×65
600×300	65	84,0	600×300×65

Magnetic fixtures

ELECTROMAGNETIC FIXTURES “EMU”

Catalog Nr.	Rozměr mm×mm Diameter	kg	
46.04.021	250×150	16,0	250×150
46.04.022	300×150	19,0	300×150
46.04.023	350×150	25,0	350×150
46.04.024	400×150	29,0	400×150
46.04.025	450×150	33,0	450×150
46.04.084	400×200	38,0	400×200
46.04.085	450×200	42,0	450×200
46.04.086	500×200	47,0	500×200
46.04.088	600×200	36,0	600×200
46.04.127	600×250	53,0	600×250
46.04.166	600×300	66,0	600×300

Specification:
- pole pitch 2 and 4 mm
- low operation temperature

Application:
- for small and thin parts

LAMINATED BLOCKS

Catalog Nr.	Diameter mm×mm	
70.01.032	320×75×25	320×75×25
70.01.065	650×75×25	650×75×25
70.02.032	320×100×40	320×100×40
70.02.065	650×100×40	650×100×40

Specification:
- lamellas soldered with silver
- longitudinal poling
- pole pitch 3 Fe+1MS

Application:
- widening of the fixture application

PERMANENT CIRCLE FIXTURES FERROMAX

Catalog Nr.	Diameter /mm/	kg	
31.00.203	∅ 200	12,0	200
31.00.253	∅ 250	17,0	250
31.00.303	∅ 300	27,0	300
31.00.353	∅ 350	40,0	350
31.00.403 (1 S)	∅ 400	56,0	400
31.00.450 (1 S)	∅ 450	78,0	450
31.00.500 (1 S)	∅ 500	85,0	500
31.00.600 (4 S)	∅ 600	125,0	600
31.00.700 (4 S)	∅ 700	201,0	700
31.00.800 (4 S)	∅ 800	253,0	800

Specification:
- pole pitch 13 mm or 11 mm
- pole plate soldered with silver
- waterproof construction

Application:
- for clamping small and middle parts

Magnetic fixtures

PERMANENT CIRCLE FIXTURES PERMAG K

Catalog Nr.	Diameter /mm/	kg	
41.127	∅ 127	2,5	127
41.160	∅ 160	5,5	160
41.200	∅ 200	4,5	200
41.250	∅ 250	22,0	250
41.315	∅ 315	35,0	315

Specification:
- pole pitch 13 mm or 11 mm
- pole plate soldered with silver
- waterproof construction

Application:
- for clamping small and middle parts

MAGNETIC FIXTURE NEOMILL

Cat. Nr.	Dimension mm×mm	kg	
35.15.025	250×150	17,0	250×150
35.15.030	300×150	20,0	300×150
35.15.035	350×150	33,5	350×150
35.20.040	400×200	39,0	400×200
35.25.040	400×250	48,5	400×250
35.20.050	500×200	48,0	500×200
35.25.050	500×250	60,0	500×250
35.30.050	500×300	72,0	500×300
35.20.060	600×200	58,0	600×200
35.30.060	600×300	87,0	600×300

Specification:
- neodym magnets with higher clamping power
- pole pitch 15 mm
- course poling with brass lamellas

Application:
- ficture for small and midle parts

DEMAGNETIZING DEVICES

Cat. Nr.	Specification	Dimension mm×mm	kg	
51.57.351	DM-3	250×165×75	8,8	DM-3
51.57.352	DM-4	280×266×75	14,0	DM-4
51.57.356	DM-5	400×286×75	19,0	DM-5
51.57.358	DEM-4	280×280, 220VAC, 50/60Hz	15,0	DEM-4

Specification:
- demagnetizing surface to 300×400 mm
- with extended work cycle, low consumption in readyness mode
- self-setting of demagnetizing deep

Application:
- demagnetizing of flat works and parts