MEHAANILISED TIHENDDID

M14 M15 M16

Performance Capabilities

- Temperature:
-75℃ to 200℃
- Pressure:
Up to 20 bar
- Speed:
Up to 23 m/s
- End play/axial float allowance
±0.1mm

Sizes
18mm to 150mm
0.75” to 7”

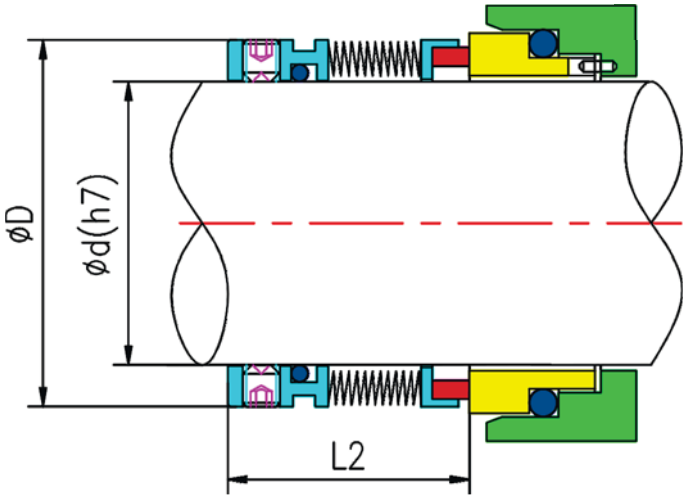

Materials Combination

- Face: Carbon, SiC, TC
- Seat: Ceramic, SiC, TC
- O-rings: NBR, EPDM, VITON, Aflas, FEP, Kalrez, Chemraz, Grofoil etc.
- Spring: SS316, hastelloy C, AM350
- Metal parts: SS316, hastelloy C

	d	D	L2
M14/M15/M16-18	18	32	27.7
M14/M15/M16-20	20	33.3	27.7
M14/M15/M16-22	22	36	27.7
M14/M15/M16-24	24	38.1	30.2
M14/M15/M16-25	25	39	30.2
M14/M15/M16-28	28	42	32.7
M14/M15/M16-30	30	44	32.7
M14/M15/M16-32	32	46	32.7
M14/M15/M16-33	33	47	32.7
M14/M15/M16-35	35	49.2	32.7
M14/M15/M16-38	38	52.4	34.2
M14/M15/M16-40	40	55.6	34.2
M14/M15/M16-43	43	58.7	34.2
M14/M15/M16-45	45	58.7	34.2
M14/M15/M16-48	48	61.9	34.2
M14/M15/M16-50	50	65.1	34.2
M14/M15/M16-53	53	68.3	34.2
M14/M15/M16-55	55	71	34.2
M14/M15/M16-60	60	74.6	39.7
M14/M15/M16-65	65	84.1	39.7
M14/M15/M16-70	70	87.3	45.2
M14/M15/M16-75	75	95.3	45.2
M14/M15/M16-80	80	98.4	44.7
M14/M15/M16-85	85	104.8	44.7
M14/M15/M16-90	90	108	49.7
M14/M15/M16-95	95	114.3	49.7
M14/M15-100	100	120.7	49.7
M14/M15-105	105	131.7	48.5
M14/M15-110	110	138.1	48.5
M14/M15-115	115	144.5	48.5
M14/M15-120	120	144.5	48.5
M14/M15-125	125	150.8	48.5
M14/M15-130	130	157.8	48.5
M14/M15-140	140	170.5	48.5
M14/M15-150	145	176.9	48.5

	d	D	L2
M14/M15/M16-0.75"	19.05	33.32	31.75
M14/M15/M16-0.875"	22.23	36.50	31.75
M14/M15/M16-0.937"	23.80	38.10	31.75
M14/M15/M16-1"	25.40	39.67	31.75
M14/M15/M16-1.125"	28.58	42.85	31.75
M14/M15/M16-1.25"	31.75	46.02	33.32
M14/M15/M16-1.375"	34.93	49.20	36.50
M14/M15/M16-1.5"	38.10	52.37	36.50
M14/M15/M16-1.625"	41.28	55.55	36.50
M14/M15/M16-1.75"	44.45	58.72	36.50
M14/M15/M16-1.875"	47.63	61.90	38.10
M14/M15/M16-2"	50.80	65.07	38.10
M14/M15/M16-2.125"	53.98	68.25	38.10
M14/M15/M16-2.25"	57.15	71.42	39.67
M14/M15/M16-2.375"	60.33	74.60	39.67
M14/M15/M16-2.5"	63.50	80.95	39.67
M14/M15/M16-2.625"	66.68	84.12	41.28
M14/M15/M16-2.75"	69.85	87.30	41.28
M14/M15/M16-2.875"	73.03	92.08	42.85
M14/M15/M16-3"	76.20	95.25	42.85
M14/M15/M16-3.125"	79.38	98.43	44.45
M14/M15/M16-3.25"	82.55	101.60	44.45
M14/M15/M16-3.375"	85.73	140.78	44.45
M14/M15/M16-3.5"	88.90	107.95	47.63
M14/M15/M16-3.625"	92.08	111.13	47.63
M14/M15/M16-3.75"	95.25	114.30	47.63
M14/M15/M16-3.875"	98.43	117.48	47.63
M14/M15/M16-4"	101.60	120.65	47.63
M14/M15-4.25"	107.95	131.75	48.34
M14/M15-4.5"	114.30	138.13	48.34
M14/M15-4.75"	120.65	144.48	48.34
M14/M15-5"	127.00	150.83	48.34
M14/M15-5.25"	133.35	157.81	48.34
M14/M15-5.5"	139.70	164.16	48.34
M14/M15-5.75"	146.05	170.54	48.34
M14/M15-6"	152.40	176.89	48.34
M14/M15-6.5"	165.10	189.74	48.34
M14/M15-7"	177.80	202.46	48.34

M17

Performance Capabilities

- Temperature:
-40℃ to 220℃
- Pressure:
Up to 25 bar
- Speed:
Up to 20 m/s
- End play/axial float allowance
±0.1mm

Sizes
18mm to 100mm
0.75″ to 4″

Materials Combination

- Face: Carbon, SiC, TC
- Seat: Ceramic, SiC, TC
- O-rings: NBR, EPDM, VITON, Aflas, FEP, Kalrez, Chemraz, Grofoil etc.
- Spring: SS316, hastelloy C, Am350
- Metal parts: SS316, hastelloy C

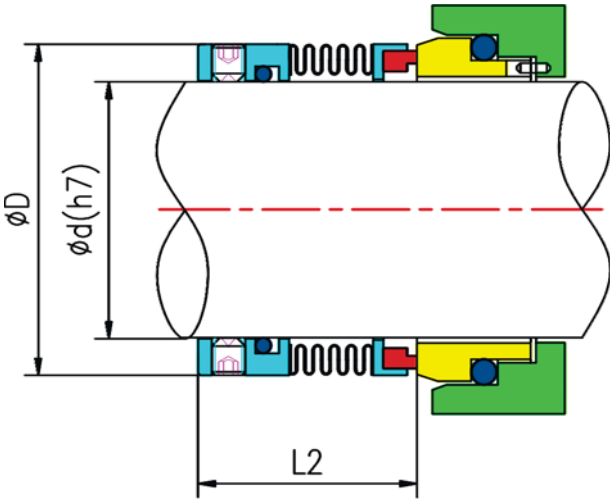

	d	D	L2
M17-18	18	31	31.5
M17-20	20	31	31.5
M17-22	22	31	31.5
M17-24	24	36	36.7
M17-25	25	36	37
M17-28	28	39	37.5
M17-30	30	42	38
M17-32	32	46	43
M17-33	33	46	43
M17-35	35	48.5	43
M17-38	38	51.5	42
M17-40	40	54	42
M17-43	43	58.4	47
M17-45	45	58.4	47
M17-48	48	63.7	47
M17-50	50	63.7	46.5
M17-53	53	69	56.5
M17-55	55	71	56.5
M17-58	58	73.3	56.5
M17-60	60	76.7	56.5
M17-63	63	79.4	56.5
M17-65	65	83	66.5
M17-68	68	87.8	66.5
M17-70	70	87.8	65.5
M17-75	75	94	65.5
M17-80	80	100.6	75
M17-85	85	106	75
M17-90	90	110.3	75
M17-95	95	114.9	75
M17-100	100	121.3	75

	d	D	L2
M17-0.75"	19.05	31.0	31.5
M17-0.875"	22.23	36.0	37.0
M17-1"	25.40	39.0	37.5
M17-1.125"	28.58	42.0	38.0
M17-1.25"	31.75	46.0	43.0
M17-1.375"	34.93	48.5	43.0
M17-1.5"	38.10	51.5	42.0
M17-1.625"	41.28	58.4	47.0
M17-1.75"	41.28	58.4	47.0
M17-1.875"	47.63	63.7	46.5
M17-2"	50.80	63.7	46.5
M17-2.125"	53.98	69.0	56.5
M17-2.25"	57.15	73.3	56.5
M17-2.375"	60.33	76.7	56.5
M17-2.5"	63.50	79.4	56.5
M17-2.625"	66.68	83.0	66.5
M17-2.75"	69.85	87.8	65.5
M17-2.875"	73.02	94.0	65.5
M17-3"	76.20	94.0	65.5
M17-3.125"	79.37	100.6	75.0
M17-3.25"	82.55	100.6	75.0
M17-3.375"	85.72	106.0	75.0
M17-3.5"	88.90	110.3	75.0
M17-3.625"	92.07	114.9	75.0
M17-3.75"	95.25	114.9	75.0
M17-3.875"	98.42	121.3	75.0
M17-4"	101.60	121.3	75.0

M21

Performance Capabilities

- Temperature:
–40℃ to 220℃
- Pressure:
Up to 25 bar
- Speed:
Up to 20 m/s
- End play/axial float allowance
± 0.1mm

Sizes
16mm to 100mm

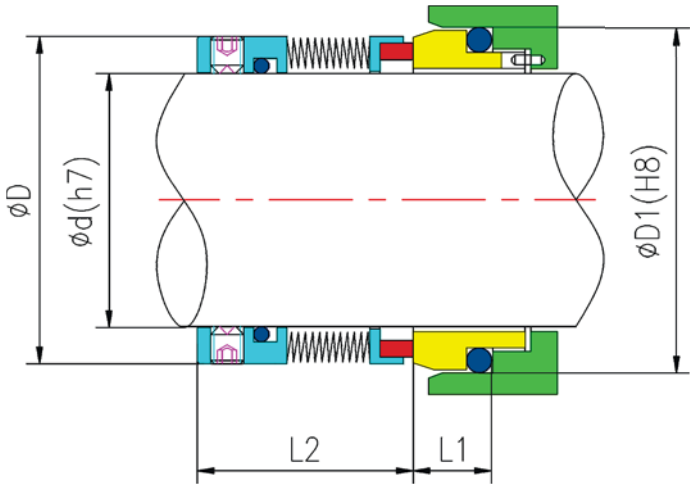

Materials Combination

- Face: Carbon, SiC, TC
- Seat: Ceramic, SiC, TC
- O–rings: NBR, EPDM, VITON, Aflas, FEP, Kalrez, Chemraz, Grofoil etc.
- Spring: SS316, hastelloy C, Am350
- Metal parts: SS316, hastelloy C

	d	D	D1	L1	L2
M21-16	16	30	27	10	32.7
M21-18	18	32	33	11.5	30.7
M21-20	20	33.5	35	11.5	30.7
M21-22	22	36.5	37	11.5	30.7
M21-24	24	39	39	11.5	28.7
M21-25	25	39.6	40	11.5	28.7
M21-28	28	42.8	43	11.5	31.2
M21-30	30	45	45	11.5	31.2
M21-32	32	46	48	11.5	31.2
M21-33	33	48	48	11.5	31.2
M21-35	35	49.2	50	11.5	31.2
M21-38	38	52.3	56	14	31.2
M21-40	40	55.5	58	14	31.2
M21-43	43	57.5	61	14	31.2
M21-45	45	58.7	63	14	31.2
M21-48	48	61.9	66	14	31.2
M21-50	50	65	70	15	32.7
M21-53	53	68.2	73	15	32.7
M21-55	55	70	75	15	32.7
M21-58	58	71.7	78	15	37.7
M21-60	60	74.6	80	15	37.7
M21-63	63	79	83	15	37.7
M21-65	65	84.1	85	15	37.7
M21-68	68	87.3	90	18	34.7
M21-70	70	87.3	92	18	42.2
M21-75	75	95	97	18	42.2
M21-80	80	98.4	105	18.2	42
M21-85	85	104.7	110	18.2	42
M21-90	90	111	115	18.2	47
M21-95	95	114	120	17.2	48
M21-100	100	117.4	125	17.2	48

M22

Performance Capabilities

- Temperature:
–75℃ to 400℃
- Pressure:
Up to 20 bar (single plate)
Up to 60 bar (double plate)
- Speed:
Up to 23 m/s
- End play/axial float allowance
± 0.1mm

Sizes
16mm to 100mm

Materials Combination

- Face: Carbon, SiC, TC
- Seat: Ceramic, SiC, TC
- O–rings: NBR, EPDM, VITON, Aflas, FEP,Kalrez, Chemraz, Grofoil etc.
- Spring: SS316, hastelloy C, AM350
- Metal parts: SS316, hastelloy C

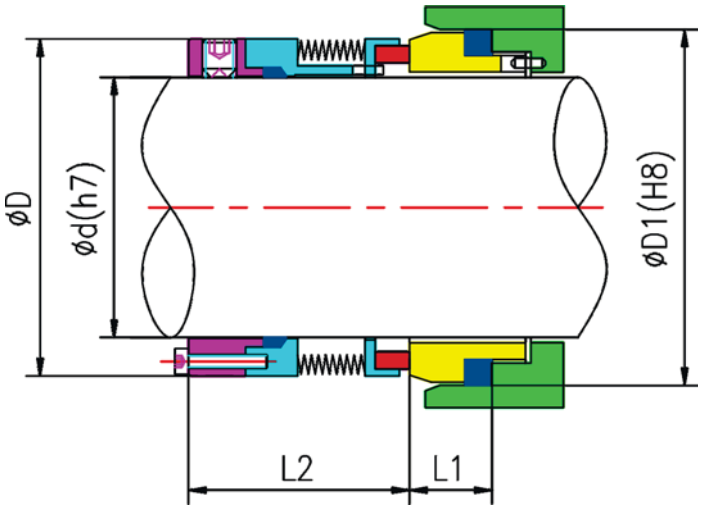

	d	D	D1	L1	L2
M22-16	16	38	35	11.5	46.7
M22-18	18	40	37	11.5	46.7
M22-20	20	42	40	11.5	46.7
M22-22	22	44	43	11.5	46.7
M22-24	24	46	43	11.5	46.7
M22-25	25	47	45	11.5	46.7
M22-28	28	50	48	11.5	46.7
M22-30	30	52	50	11.5	46.7
M22-32	32	54	56	14	46.7
M22-33	33	55	56	14	46.7
M22-35	35	57	58	14	46.7
M22-38	38	60	61	14	46.7
M22-40	40	66	63	14	46.7
M22-43	43	69	66	14	46.7
M22-45	45	71	70	15	46.7
M22-48	48	74	73	15	46.7
M22-50	50	76	75	15	46.7
M22-53	53	79	78	15	46.7
M22-55	55	81	80	15	46.7
M22-58	58	85	83	15	53.2
M22-60	60	87	85	15	53.2
M22-63	63	90	90	18	53.2
M22-65	65	92	92	18	53.2
M22-68	68	95	97	18	53.2
M22-70	70	97	97	18	53.2
M22-75	75	102	105	18.2	53
M22-80	80	107	110	18.2	53
M22-85	85	112	115	18.2	53
M22-90	90	117	120	17.2	54
M22-95	95	122	125	17.2	54
M22-100	100	127	134.3	20	54.2

N11

Performance Capabilities

- Temperature:
–100℃ to 400℃
- Pressure:
Up to 10 bar (unbalance type)
- Speed:
Up to 20 m/s
- End play/axial float allowance
± 0.1mm

Sizes
10mm t0 125mm
0.5” to 4”

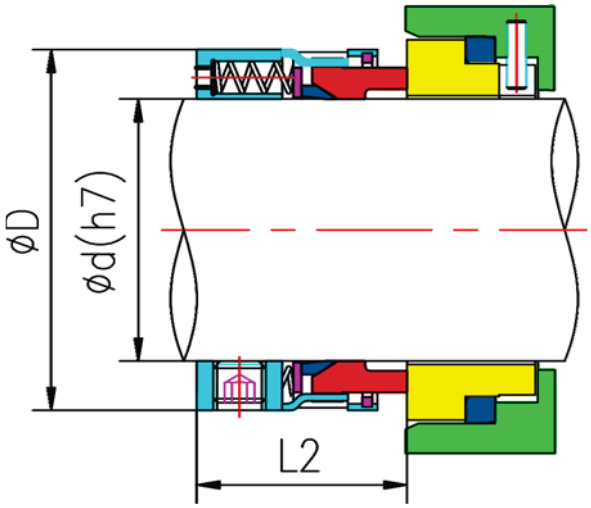

Materials Combination

- Face: Carbon, SiC, TC
- Seat: Ceramic, SiC, TC
- O–rings: PTFE
- Spring: SS304, SS316, hastelloy C
- Metal parts: SS304, SS316

	d	D	L2
N11-10	10	29.0	21
N11-14	14	29.0	21
N11-15	15	29.0	21
N11-16	16	33.8	19
N11-18	18	33.8	22
N11-20	20	39.8	24
N11-22	22	39.8	24
N11-24	24	39.8	25
N11-25	25	39.8	25
N11-28	28	43.4	27
N11-30	30	46.4	27
N11-32	32	49.7	29
N11-35	35	51.3	29
N11-38	38	54.5	29
N11-40	40	59.6	35
N11-44	44	64.0	35
N11-45	45	64.7	35
N11-48	48	67.2	35
N11-50	50	69.6	35
N11-55	55	82.7	43
N11-60	60	82.7	43
N11-65	65	92.6	43
N11-70	70	92.6	43
N11-75	75	101.1	43
N11-80	80	101.1	43
N11-85	85	117.7	43
N11-90	90	117.7	43
N11-95	95	117.7	43
N11-100	100	137.5	43
N11-105	105	137.5	51
N11-110	110	142.5	51
N11-115	115	152.4	51
N11-120	120	152.4	51
N11-125	125	157.4	51

	d	D	L2
N11-1/2"	12.7	26.7	20.8
N11-5/8"	15.88	30.7	19.2
N11-3/4"	19.05	34	22.4
N11-7/8"	22.23	37.2	24
N11-1"	25.4	40.3	25.6
N11-1 1/8"	28.58	43.5	27.2
N11-1 1/4"	31.75	48.3	27.2
N11-1 3/8"	34.93	51.5	28.8
N11-1 1/2"	38.1	54.6	28.8
N11-1 5/8"	41.28	61	35.2
N11-1 3/4"	44.45	64.2	35.2
N11-1 7/8""	47.63	67.3	35.2
N11-2"	50.8	70.5	35.2
N11-2 1/8"	53.98	76.9	43.2
N11-2 1/4"	57.15	80	43.2
N11-2 3/8"	60.33	83.2	43.2
N11-2 1/2"	63.5	86.4	43.2
N11-2 5/8"	66.68	89.6	43.2
N11-2 3/4"	69.85	92.7	43.2
N11-2 7/8""	73.03	95.9	43.2
N11-3"	76.2	97.5	43.2
N11-3 1/8"	79.38	100.7	43.2
N11-3 1/4"	82.55	105.4	43.2
N11-3 3/8"	85.73	108.6	43.2
N11-3 1/2"	88.9	111.8	43.2
N11-3 5/8"	92.08	115	43.2
N11-3 3/4"	95.25	118.1	43.2
N11-3 7/8"	98.43	121.3	43.2
N11-4"	101.6	124.5	43.2

N12

Performance Capabilities

- Temperature:
–50℃ to 400℃
- Pressure:
Up to 25 bar (balance type)
- Speed:
Up to 20 m/s
- End play/axial float allowance
± 0.1mm

Sizes
5/8" to 4"

Materials Combination

- Face: Carbon, SiC, TC
- Seat: Ceramic, SiC, TC
- O–rings: PTFE
- Spring: SS304, SS316, hastelloy C
- Metal parts: SS304, SS316

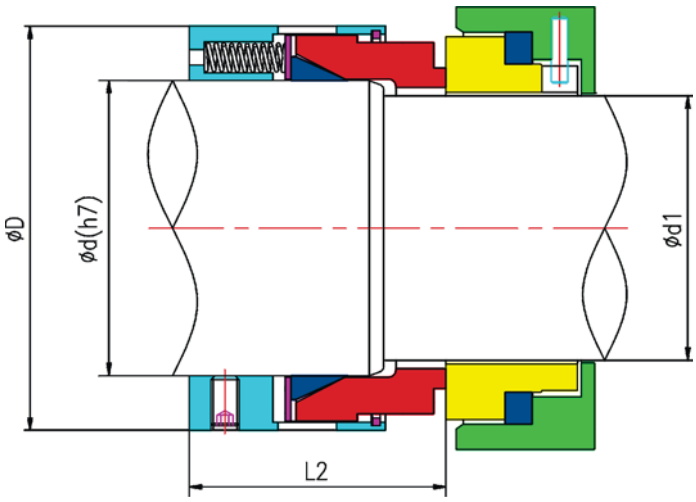

	d	d1	D	L2
N12-5/8"	15.88	12.7	30.7	27.2
N12-3/4"	19.05	15.9	34	30.2
N12-7/8"	22.23	19.1	37.2	32.2
N12-1"	25.4	22.2	40.3	33.2
N12-1 1-8"	28.58	25.4	43.5	35.2
N12-1 1-4"	31.75	28.6	48.3	35.2
N12-1 3-8"	34.93	28.6	51.5	37.2
N12-1 1-2"	38.1	31.8	54.6	37.2
N12-1 5-8"	41.28	34.9	61	45.2
N12-1 3-4"	44.45	38.1	64.2	45.2
N12-1 7-8"	47.63	41.3	67.3	45.2
N12-2"	50.8	44.5	70.5	45.2
N12-2 1-8"	53.98	47.6	76.9	52.2
N12-2 1-4"	57.15	50.8	80	52.2
N12-2 3-8"	60.33	54	83.2	52.2
N12-2 1-2"	63.5	57.2	86.4	52.2
N12-2 5-8"	66.68	60.3	89.6	52.2
N12-2 3-4"	69.85	63.5	92.7	52.2
N12-2 7-8"	73.03	66.7	95.9	52.2
N12-3"	76.2	69.9	97.5	52.2
N12-3 1-8"	79.38	73	100.7	52.2
N12-3 1-4"	82.55	76.2	105.4	52.2
N12-3 3-8"	85.73	79.4	108.6	52.2
N12-3 1-2"	88.9	82.6	111.8	52.2
N12-3 5-8"	92.08	85.7	115	52.2
N12-3 3-4"	95.25	88.9	118.1	52.2
N12-3 7-8"	98.43	92.1	121.3	52.2
N12-4"	101.6	95.3	124.5	52.2

N13

Performance Capabilities

- Temperature:
–40℃ to 200℃, depend on o–ring material
- Pressure:
Up to 10 bar (unbalance type)
- Speed:
Up to 20 m/s
- End play/axial float allowance
± 0.1mm

Sizes
14mm to 100mm

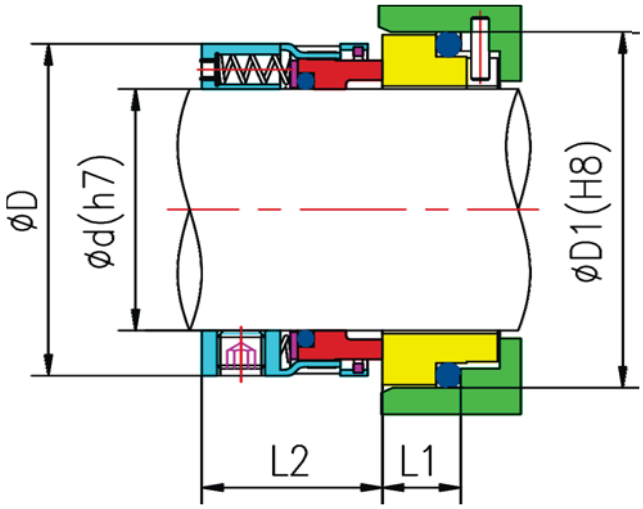

Materials Combination

- Face: Carbon, SiC, TC
- Seat: Ceramic, SiC, TC
- O–rings: NBR, EPDM, VITON, Aflas, FEP, Kalrez, Chemraz etc.
- Spring: SS304, SS316, hastelloy C
- Metal parts: SS304, SS316

	d	D	D1	L1	L2
N13-14	14	24	25	12	23.2
N13-16	16	26	27	12	23.2
N13-18	18	32	33	13.5	24.2
N13-20	20	34	35	13.5	24.2
N13-22	22	36	37	13.5	24.2
N13-24	24	38	39	13.5	26.9
N13-25	25	39	40	13	27.2
N13-28	28	42	43	12.5	30.2
N13-30	30	44	45	12	30.7
N13-32	32	46	48	12	30.7
N13-33	33	47	48	12	30.7
N13-35	35	49	50	12	30.7
N13-38	38	54	56	13	32.2
N13-40	40	56	58	13	32.2
N13-43	43	59	61	13	32.2
N13-45	45	61	63	13	32.2
N13-48	48	64	66	13	32.2
N13-50	50	66	70	13.5	34.2
N13-53	53	69	73	13.5	34.2
N13-55	55	71	75	13.5	34.2
N13-58	58	78	78	13.5	39.2
N13-60	60	80	80	13.5	39.2
N13-63	63	83	83	13.5	39.2
N13-65	65	85	85	13.5	39.2
N13-68	68	88	90	13.5	39.2
N13-70	70	90	92	14.5	45.7
N13-75	75	95	97	14.5	45.7
N13-80	80	104	105	15	45.2
N13-85	85	109	110	15	45.2
N13-90	90	114	115	15	50.2
N13-95	95	119	120	15	50.2
N13-100	100	124	125	15	50.2

N14

Performance Capabilities

- Temperature:
–40℃ to 200℃, depend on o–ring material
- Pressure:
Up to 25 bar (balance type)
- Speed:
Up to 20 m/s
- End play/axial float allowance
± 0.1mm

Sizes
14mm to 100mm

Materials Combination

- Face: Carbon, SiC, TC
- Seat: Ceramic, SiC, TC
- O–rings: NBR, EPDM, VITON, Aflas, FEP, Kalrez, Chemraz etc.
- Spring: SS304, SS316, hastelloy C
- Metal parts: SS304, SS316

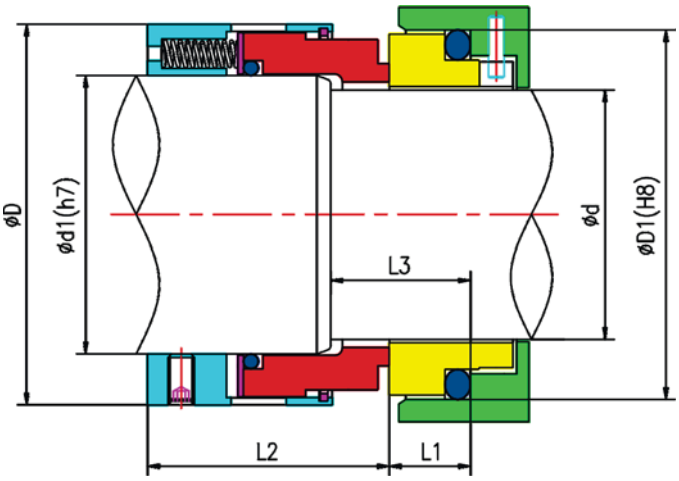

	d	d1	D	D1	L1	L2	L3
N14-14	14	18	32	25	12	30.7	18
N14-16	16	20	34	27	12	30.7	18
N14-18	18	22	36	33	13.5	31.7	20
N14-20	20	24	38	35	13.5	31.7	20
N14-22	22	26	40	37	13.5	31.7	20
N14-24	24	28	42	39	13.5	34.4	20
N14-25	25	30	44	40	13	34.7	20
N14-28	28	33	47	43	12.5	37.7	20
N14-30	30	35	49	45	12	38.2	20
N14-32	32	38	54	48	12	38.2	20
N14-33	33	38	54	48	12	38.2	20
N14-35	35	40	56	50	12	38.2	20
N14-38	38	43	59	56	13	39.7	23
N14-40	40	45	61	58	13	39.7	23
N14-43	43	48	64	61	13	39.7	23
N14-45	45	50	66	63	13	39.7	23
N14-48	48	53	69	66	13	39.7	23
N14-50	50	55	71	70	13.5	44.2	25
N14-53	53	58	78	73	13.5	44.2	25
N14-55	55	60	80	75	13.5	44.2	25
N14-58	58	63	83	78	13.5	49.2	25
N14-60	60	65	85	80	13.5	49.2	25
N14-63	63	68	88	83	13.5	49.2	25
N14-65	65	70	90	85	13.5	49.2	25
N14-70	70	75	95	92	14.5	55.7	28
N14-75	75	80	104	97	14.5	55.7	28
N14-80	80	85	109	105	15	55.2	28
N14-85	85	90	114	110	15	60.2	28
N14-90	90	95	119	115	15	60.2	28
N14-95	95	100	124	120	15	60.2	28
N14-100	100	105	129	125	15	60.2	28

N15

Performance Capabilities

- Temperature:
–50℃ to 500℃
- Pressure:
Up to 10 bar (unbalance type)
- Speed:
Up to 20 m/s
- End play/axial float allowance
± 0.1mm

Sizes
14mm to 100mm

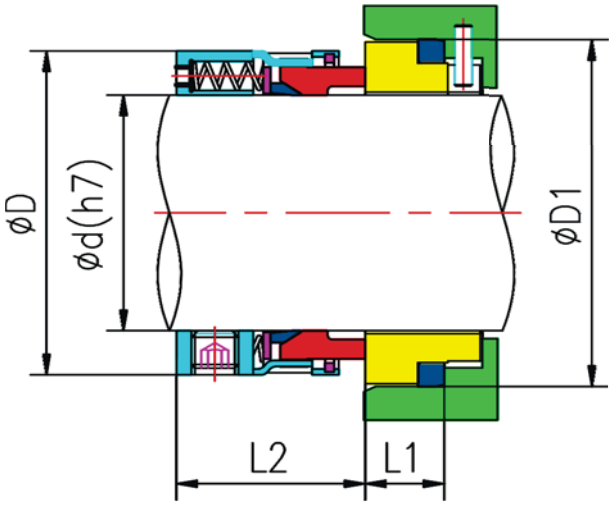

Materials Combination

- Face: Carbon, SiC, TC
- Seat: Ceramic, SiC, TC
- O–rings: PTFE
- Spring: SS304, SS316, hastelloy C
- Metal parts: SS304, SS316

	d	D	D1	L1	L2
N15-14	14	24	25	12	23.2
N15-16	16	26	27	12	23.2
N15-18	18	32	33	13.5	24.2
N15-20	20	34	35	13.5	24.2
N15-22	22	36	37	13.5	24.2
N15-24	24	38	39	13.5	26.9
N15-25	25	39	40	13	27.2
N15-28	28	42	43	12.5	30.2
N15-30	30	44	45	12	30.7
N15-32	32	46	48	12	30.7
N15-33	33	47	48	12	30.7
N15-35	35	49	50	12	30.7
N15-38	38	54	56	13	32.2
N15-40	40	56	58	13	32.2
N15-43	43	59	61	13	32.2
N15-45	45	61	63	13	32.2
N15-48	48	64	66	13	32.2
N15-50	50	66	70	13.5	34.2
N15-53	53	69	73	13.5	34.2
N15-55	55	71	75	13.5	34.2
N15-58	58	78	78	13.5	39.2
N15-60	60	80	80	13.5	39.2
N15-63	63	83	83	13.5	39.2
N15-65	65	85	85	13.5	39.2
N15-68	68	88	90	13.5	39.2
N15-70	70	90	92	14.5	45.7
N15-75	75	95	97	14.5	45.7
N15-80	80	104	105	15	45.2
N15-85	85	109	110	15	45.2
N15-90	90	114	115	15	50.2
N15-95	95	119	120	15	50.2
N15-100	100	124	125	15	50.2

N16

Performance Capabilities

- Temperature:
–50℃ to 500℃
- Pressure:
Up to 25 bar (balance type)
- Speed:
Up to 20 m/s
- End play/axial float allowance
± 0.1mm

Sizes
14mm to 100mm

Materials Combination

- Face: Carbon, SiC, TC
- Seat: Ceramic, SiC, TC
- O–rings: PTFE
- Spring: SS304, SS316, hastelloy C
- Metal parts: SS304, SS316

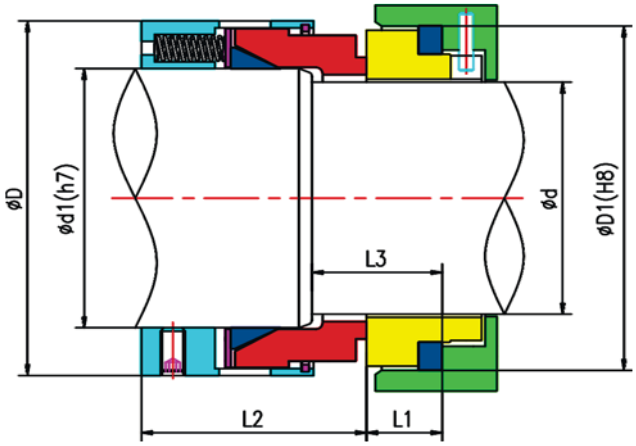

	d	d1	D	D1	L1	L2	L3
N16-14	14	18	32	25	12	30.7	18
N16-16	16	20	34	27	12	30.7	18
N16-18	18	22	36	33	13.5	31.7	20
N16-20	20	24	38	35	13.5	31.7	20
N16-22	22	26	40	37	13.5	31.7	20
N16-24	24	28	42	39	13.5	34.4	20
N16-25	25	30	44	40	13	34.7	20
N16-28	28	33	47	43	12.5	37.7	20
N16-30	30	35	49	45	12	38.2	20
N16-32	32	38	54	48	12	38.2	20
N16-33	33	38	54	48	12	38.2	20
N16-35	35	40	56	50	12	38.2	20
N16-38	38	43	59	56	13	39.7	23
N16-40	40	45	61	58	13	39.7	23
N16-43	43	48	64	61	13	39.7	23
N16-45	45	50	66	63	13	39.7	23
N16-48	48	53	69	66	13	39.7	23
N16-50	50	55	71	70	13.5	44.2	25
N16-53	53	58	78	73	13.5	44.2	25
N16-55	55	60	80	75	13.5	44.2	25
N16-58	58	63	83	78	13.5	49.2	25
N16-60	60	65	85	80	13.5	49.2	25
N16-63	63	68	88	83	13.5	49.2	25
N16-65	65	70	90	85	13.5	49.2	25
N16-70	70	75	95	92	14.5	55.7	28
N16-75	75	80	104	97	14.5	55.7	28
N16-80	80	85	109	105	15	55.2	28
N16-85	85	90	114	110	15	60.2	28
N16-90	90	95	119	115	15	60.2	28
N16-95	95	100	124	120	15	60.2	28
N16-100	100	105	129	125	15	60.2	28

N21

Performance Capabilities

- Temperature:
–20℃ to 180℃, depend on o–ring material
- Pressure:
Up to 25 bar
- Speed:
Up to 35 m/s
- End play/axial float allowance
± 0.1mm

Sizes
15mm to 100mm

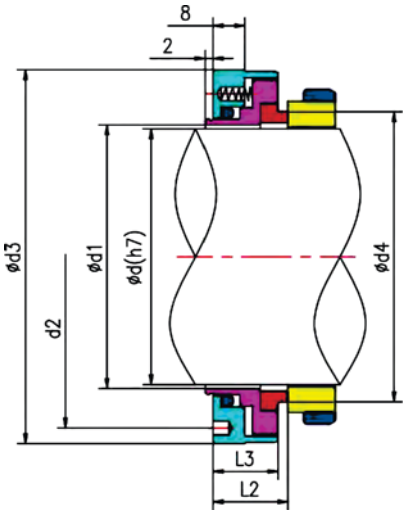

Materials Combination

- Face: Carbon, SiC, TC
- Seat: Ceramic, SiC, TC
- O–rings: NBR, EPDM, VITON, Aflas, FEP, Kalrez, Chemraz etc.
- Spring: SS304, SS316, hastelloy C
- Metal parts: SS304, SS316

	d	d1	d2	d3	d4	L2	L3
N21-15	15	16	34	42	22.6	17	15
N21-18	18	19	37	45	25.6	17	15
N21-20	20	21	40	48	27.6	17	15
N21-22	22	23	42	50	29.6	17	15
N21-25	25	26	44	52	32.8	17	15
N21-28	28	29	47	55	35.8	17	15
N21-30	30	31	50	58	37.8	17	15
N21-32	32	33	52	60	39.8	17	15
N21-35	35	36	54	62	42.8	17	15
N21-38	38	39	57	65	45.9	17	15
N21-40	40	41	60	68	47.9	17	15
N21-42	42	43	64	72	49.9	17	15
N21-45	45	46	67	75	52.9	17	15
N21-48	48	49	72	80	55.9	17	15
N21-50	50	51	72	80	58.2	17	15
N21-52	52	53	74	82	60.2	17	15
N21-55	55	56	77	85	63.2	17	15
N21-58	58	59	82	90	66.7	17	15
N21-60	60	61	82	90	68.7	17	15
N21-65	65	66	87	95	73.7	19	16.5
N21-68	68	69	92	100	76.7	19	16.5
N21-70	70	71	92	100	78.7	19	16.5
N21-75	75	76	100	108	83.7	19	16.5
N21-80	80	81	104	112	88.7	19	16.5
N21-85	85	86	110	118	93.7	19	16.5
N21-90	90	91	114	122	99.5	19	16.5
N21-95	95	96	120	128	104.5	19	16.5
N21-100	100	101	124	132	109.5	19	16.5

N24

Performance Capabilities

- Temperature:
–20℃ to 180℃, depend on o–ring material
- Pressure:
Up to 10 bar
- Speed:
Up to 10 m/s
- End play/axial float allowance
± 1mm

Sizes
10mm to 80mm

Materials Combination

- Face: Carbon, SiC, TC
- Seat: Ceramic, SiC, TC
- O–rings: NBR, EPDM, VITON, Aflas, FEP, Kalrez, Chemraz etc.
- Spring: SS304, SS316
- Metal parts: SS304, SS316

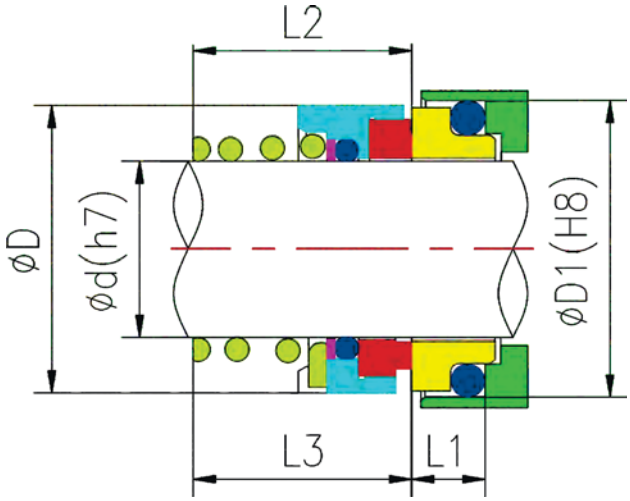

	d	D	D1	L1	L2	L3
N24-10	10	20	21	6.6	-	16.9
N24-12	12	22	23	6.6	-	17.4
N24-14	14	24	25	6.6	16.5	17.4
N24-16	16	26	27	6.6	16.5	19.5
N24-18	18	31	33	7.5	18	20.5
N24-20	20	34	35	7.5	19	22.0
N24-22	22	36	37	7.5	20.5	23.5
N24-24	24	38	39	7.5	22	25.0
N24-25	25	39	40	7.5	23.5	26.5
N24-28	28	42	43	7.5	24.5	26.5
N24-30	30	44	45	7.5	24.5	25.0
N24-32	32	46	48	7.5	28	28.5
N24-33	33	47	48	7.5	-	-
N24-35	35	49	50	7.5	28	28.5
N24-38	38	54	56	9	31	32.2
N24-40	40	56	58	9	34	34.7
N24-43	43	59	61	9	-	-
N24-45	45	61	63	9	36.5	39.2
N24-48	48	64	66	9	42	44.7
N24-50	50	66	70	9.5	43	45.7
N24-53	53	69	73	11	-	-
N24-55	55	71	75	11	47	49.0
N24-58	58	78	78	11	50	52.0
N24-60	60	79	80	11	51	55.0
N24-63	63	83	83	11	-	-
N24-65	65	85	85	11	52	54.3
N24-68	68	88	90	11.3	52.7	55.3
N24-70	70	90	92	11.3	54	56.3
N24-75	75	98	97	11.3	54	56.3
N24-80	80	103	105	12	58	59.3

N25

Performance Capabilities

- Temperature:
–30℃ to 200℃, depend on o–ring material
- Pressure:
Up to 12 bar (unbalance type)
- Speed:
Up to 18 m/s
- End play/axial float allowance
± 1mm

Sizes
14mm to 100mm

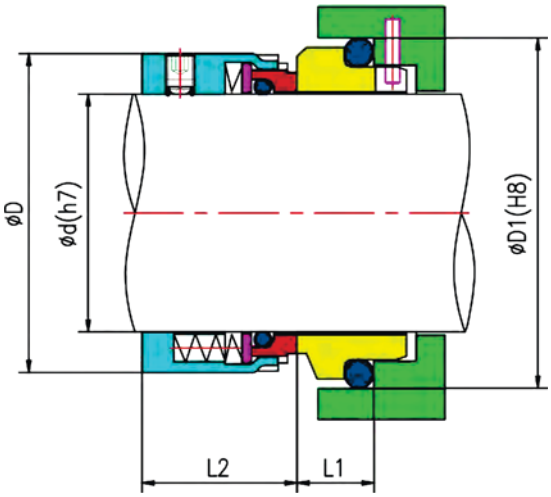

Materials Combination

- Face: Carbon, SiC, TC
- Seat: Ceramic, SiC, TC
- O–rings: NBR, EPDM, VITON, Aflas, FEP, Kalrez, Chemraz etc.
- Spring: SS304, SS316, Hastelloy
- Metal parts: SS304, SS316

	d	D	D1	L1	L2
N25-14	14	25	25	10	25.2
N25-16	16	27	27	10	25.2
N25-18	18	33	33	11.5	26.2
N25-20	20	35	35	11.5	26.2
N25-22	22	37	37	11.5	26.2
N25-24	24	39	39	11.5	28.7
N25-25	25	40	40	11.5	28.7
N25-28	28	43	43	11.5	31.2
N25-30	30	45	45	11.5	31.2
N25-32	32	47	48	11.5	31.2
N25-33	33	48	48	11.5	31.2
N25-35	35	50	50	11.5	31.2
N25-38	38	55	56	14	31.2
N25-40	40	57	58	14	31.2
N25-43	43	60	61	14	31.2
N25-45	45	62	63	14	31.2
N25-48	48	65	66	14	31.2
N25-50	50	67	70	15	32.7
N25-53	53	70	73	15	32.7
N25-55	55	72	75	15	32.7
N25-58	58	79	78	15	37.7
N25-60	60	81	80	15	37.7
N25-63	63	84	83	15	37.7
N25-65	65	86	85	15	37.7
N25-68	68	89	90	18	34.7
N25-70	70	91	92	18	42.2
N25-75	75	99	97	18	42.2
N25-80	80	104	105	18.2	42
N25-85	85	109	110	18.2	42
N25-90	90	114	115	18.2	47
N25-95	95	119	120	17.2	48
N25-100	100	124	125	17.2	48

N29 N210

Performance Capabilities

- Temperature:
–30℃ to 200℃, depend on o–ring material
- Pressure:
Up to 25 bar (balance type)
- Speed:
Up to 18 m/s
- End play/axial float allowance
± 1mm

Sizes
14mm to 95mm

Materials Combination

- Face: Carbon, SiC, TC
- Seat: Ceramic, SiC, TC
- O–rings: NBR, EPDM, VITON, Aflas, FEP, Kalrez, Chemraz etc.
- Spring: SS304, SS316, Hastelloy
- Metal parts: SS304, SS316

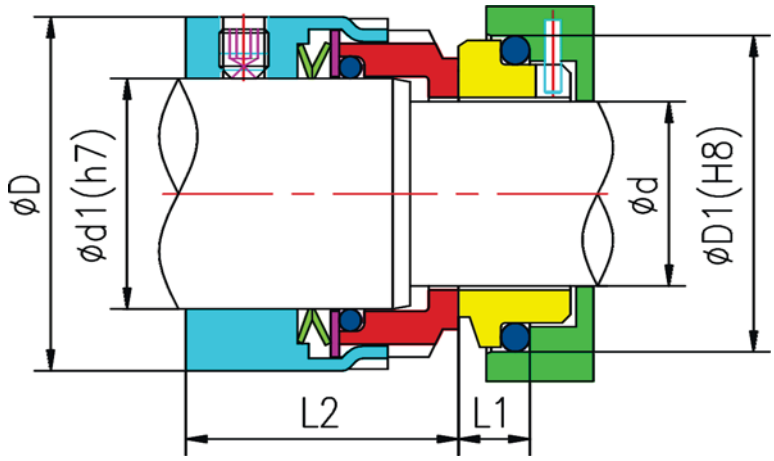

	d	d1	D	D1	L1	L2
N29,N210-14	14	18	33	25	10	32.7
N29,N210-16	16	20	35	27	10	32.7
N29,N210-18	18	22	37	33	11.5	33.7
N29,N210-20	20	24	39	35	11.5	33.7
N29,N210-22	22	26	41	37	11.5	33.7
N29,N210-24	24	28	43	39	11.5	36.2
N29,N210-25	25	30	45	40	11.5	36.2
N29,N210-28	28	33	48	43	11.5	38.7
N29,N210-30	30	35	50	45	11.5	38.7
N29,N210-32	32	38	55	48	11.5	38.7
N29,N210-33	33	38	55	48	11.5	38.7
N29,N210-35	35	40	57	50	11.5	38.7
N29,N210-38	38	43	60	56	14	38.7
N29,N210-40	40	45	62	58	14	38.7
N29,N210-43	43	48	65	61	14	38.7
N29,N210-45	45	50	67	63	14	38.7
N29,N210-48	48	53	70	66	14	38.7
N29,N210-50	50	55	72	70	15	42.7
N29,N210-53	53	58	79	73	15	42.7
N29,N210-55	55	60	81	75	15	42.7
N29,N210-58	58	63	84	78	15	47.7
N29,N210-60	60	65	86	80	15	47.7
N29,N210-63	63	68	89	83	15	47.7
N29,N210-65	65	70	91	85	15	47.7
N29,N210-70	70	75	99	92	18	52.2
N29,N210-75	75	80	104	97	18	52.2
N29,N210-80	80	85	109	105	18.2	52
N29,N210-85	85	90	114	110	18.2	57
N29,N210-90	90	95	119	115	18.2	57
N29,N210-95	95	100	124	120	17.2	58

N213

Performance Capabilities

- Temperature:
–20℃ to 200℃, depend on o–ring material
- Pressure:
Up to 25 bar
- Speed:
Up to 15 m/s
- End play/axial float allowance
± 1mm

Sizes
18mm to 100mm

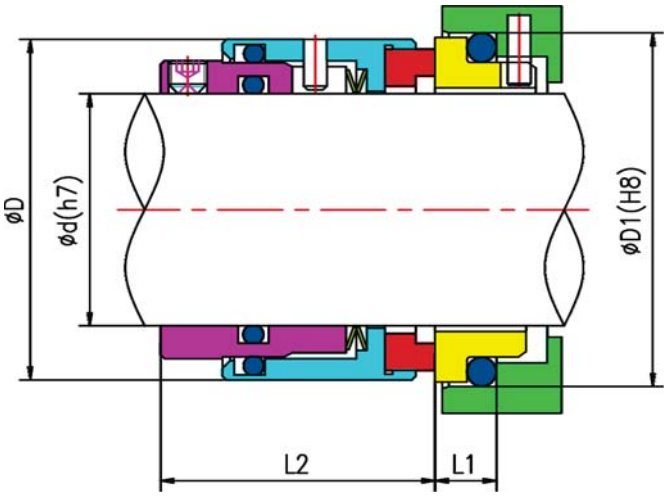

Materials Combination

- Face: Carbon, SiC, TC
- Seat: Ceramic, SiC, TC
- O–rings: NBR, EPDM, VITON, Aflas, FEP, Kalrez, Chemraz etc.
- Spring: SS304, SS316
- Metal parts: SS304, SS316

	d	D	D1	L1	L2
N213-18	18	32	33	7	30.7
N213-20	20	34	35	7	30.7
N213-22	22	36	37	7	30.7
N213-24	24	38	39	7	33.2
N213-25	25	39	40	7	33.2
N213-28	28	42	43	7	35.7
N213-30	30	44	45	7	35.7
N213-32	32	47	48	7	35.7
N213-33	33	47	48	7	35.7
N213-35	35	49	50	7	35.7
N213-38	38	54	56	8	37.2
N213-40	40	56	58	8	37.2
N213-43	43	59	61	8	37.2
N213-45	45	61	63	8	37.2
N213-48	48	64	66	8	37.2
N213-50	50	66	70	9.5	38.2
N213-53	53	69	73	9.5	38.2
N213-55	55	71	75	9.5	38.2
N213-58	58	78	78	10.5	42.2
N213-60	60	80	80	10.5	42.2
N213-63	63	83	83	10.5	42.2
N213-65	65	85	85	10.5	42.2
N213-68	68	88	90	11	41.7
N213-70	70	90	92	11.5	48.7
N213-75	75	99	97	11.5	48.7
N213-80	80	104	105	11.5	48.7
N213-85	85	109	110	11.5	48.7
N213-90	90	114	115	13	52.2
N213-95	95	119	120	13	52.2
N213-100	100	124	125	13	52.2

N41

Performance Capabilities

- Temperature:
–30℃ to 200℃, depend on o–ring material
- Pressure:
Up to 10 bar
- Speed:
Up to 10 m/s
- End play/axial float allowance
± 1mm

Sizes
8mm to 100mm

Materials Combination

- Face: Carbon, SiC, TC
- Seat: Ceramic, SiC, TC
- O–rings: NBR, EPDM, VITON, Aflas, FEP, Kalrez, Chemraz etc.
- Spring: SS304, SS316, Hastelloy
- Metal parts: SS304, SS316

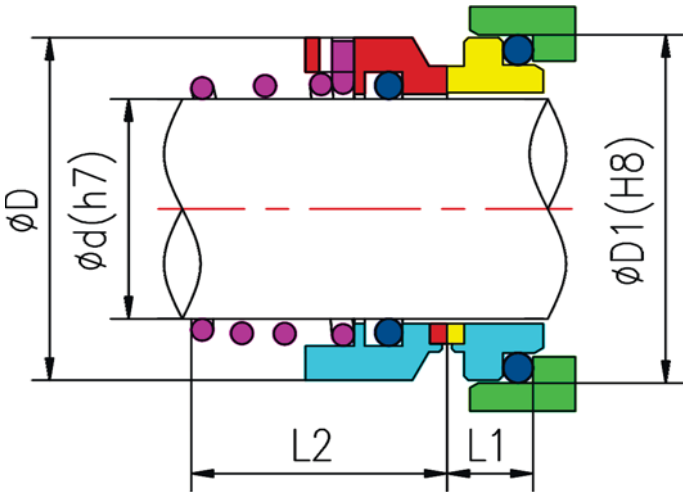

	d	D	D1	L1	L2
N41-8	8	16	17.1	5.5	15.2
N41-10	10	17.5	18.1	5.5	15.2
N41-12	12	20	20.6	5.5	18.2
N41-14	14	23	23.1	6	22.2
N41-15	15	24	26.9	7	22.2
N41-16	16	26	26.9	7	23.2
N41-17	17	27	26.9	7	23.2
N41-18	18	29	30.9	8	24.2
N41-19	19	30	30.9	8	25.2
N41-20	20	30	30.9	8	25.2
N41-22	22	34	35.4	8	25.2
N41-24	24	35	35.4	8	27.2
N41-25	25	37	38.2	8.5	27.2
N41-26	26	38	38.2	8.5	27.2
N41-28	28	42	43.3	9	29.2
N41-30	30	43	43.3	9	30.2
N41-32	32	45	43.3	9	30.2
N41-33	33	48	53.5	11.5	39.2
N41-35	35	50	53.5	11.5	39.2
N41-38	38	54	60.5	11.5	39.2
N41-40	40	56	60.5	11.5	39.2
N41-42	42	59	60.5	11.5	39.2
N41-43	43	60	60.5	11.5	39.2
N41-45	45	64	65.5	11.5	41.2
N41-48	48	68	65.5	11.5	41.2
N41-50	50	69	72.5	11.5	45.2
N41-55	55	74	72.5	11.5	47.2
N41-60	60	80	79.3	11.5	49.2
N41-65	65	87	84.5	11.5	51.2
N41-70	70	92	89.5	11.5	51.2
N41-75	75	97	94.5	11.5	57.2
N41-80	80	102	99.5	11.5	59.2
N41-85	85	110	105.5	13.5	59.2
N41-90	90	117	111.5	13.5	62.2
N41-95	95	122	116.5	13.5	62.2
N41-100	100	127	119.5	13.5	75.2

N42

Performance Capabilities

- Temperature:
–30℃ to 200℃, depend on o–ring material
- Pressure:
Up to 10 bar
- Speed:
Up to 10 m/s
- End play/axial float allowance
± 1mm

Sizes
10mm to 100mm

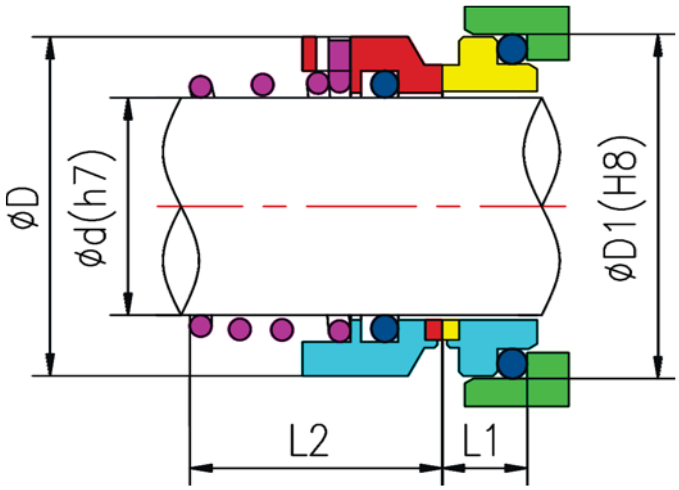

Materials Combination

- Face: Carbon, SiC, TC
- Seat: Ceramic, SiC, TC
- O–rings: NBR, EPDM, VITON, Aflas, FEP, Kalrez, Chemraz etc.
- Spring: SS304, SS316, Hastelloy
- Metal parts: SS304, SS316

	d	D	D1	L1	L2
N42-10	10	17.5	21	7	15.2
N42-12	12	20	23	7	18.2
N42-14	14	23	25	7	22.2
N42-16	16	26	27	7	23.2
N42-18	18	29	33	10	24.2
N42-20	20	29	35	10	25.2
N42-22	22	34	37	10	25.2
N42-24	24	34	39	10	27.2
N42-25	25	37	40	10	27.2
N42-28	28	42	43	10	29.2
N42-30	30	43	45	10	30.2
N42-32	32	45	48	10	30.2
N42-33	33	48	48	10	39.2
N42-35	35	49	50	10	39.2
N42-38	38	54	56	13	42.2
N42-40	40	56	58	13	42.2
N42-43	43	60	61	13	47.2
N42-45	45	64	63	13	47.2
N42-48	48	68	66	13	47.2
N42-50	50	69	70	14	46.2
N42-53	53	71	73	14	56.2
N42-55	55	74	75	14	56.2
N42-58	58	76	78	14	56.2
N42-60	60	79	80	14	56.2
N42-63	63	83	83	14	56.2
N42-65	65	87	85	14	66.2
N42-68	68	88	90	16	64.2
N42-70	70	92	92	16	64.2
N42-75	75	97	97	16	64.2
N42-80	80	102	105	18	72.2
N42-85	85	110	110	18	72.2
N42-90	90	117	115	18	72.2
N42-95	95	122	120	18	72.2
N42-100	100	127	125	18	72.2

N43 N44

Performance Capabilities

- Temperature:
–30℃ to 200℃, depend on o–ring material
- Pressure:
Up to 8 bar
- Speed:
Up to 10 m/s
- End play/axial float allowance
± 1mm

Sizes
10mm to 40mm

Materials Combination

- Face: Ceramic, SiC, TC
- Seat: Carbon, SiC, TC
- O–rings: NBR, EPDM, VITON, Aflas, FEP, Kalrez, Chemraz etc.
- Spring: SS304, SS316
- Metal parts: SS304, Ss316

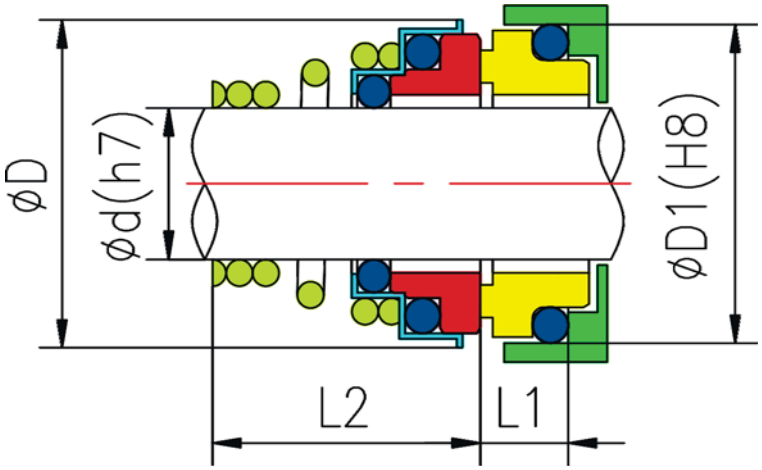

	d	D	D1	L1	L2
N43-10	10	20	18.1	5.5	15.2
N43-11	11	22	20.6	5.5	18.2
N43-12	12	22	20.6	5.5	18.2
N43-13	13	25	23.1	6	22.2
N43-14	14	25	23.1	6	22.2
N43-15	15	29	26.9	7	22.2
N43-16	16	29	26.9	7	23.2
N43-17	17	29	26.9	7	23.2
N43-18	18	33	30.9	8	24.2
N43-19	19	33	30.9	8	25.2
N43-20	20	33	30.9	8	25.2
N43-21	21	38	35.4	8	25.2
N43-22	22	38	35.4	8	25.2
N43-23	23	38	35.4	8	27.2
N43-24	24	38	35.4	8	27.2
N43-25	25	40	38.2	8.5	27.2
N43-28	28	46	43.3	9	29.2
N43-29	29	46	43.3	9	30.2
N43-30	30	46	43.3	9	30.2
N43-32	32	46	43.3	9	30.2
N43-33	33	48	53.5	11.5	39.2
N43-35	35	50	53.5	11.5	39.2
N43-38	38	56	60.5	11.5	39.2
N43-40	40	58	60.5	11.5	39.2

	d	D	D1	L1	L2
N44-10	10	20	21	7	15.2
N44-12	12	22	23	7	18.2
N44-14	14	25	25	7	22.2
N44-16	16	29	27	7	23.2
N44-18	18	33	33	10	24.2
N44-20	20	33	35	10	25.2
N44-22	22	38	37	10	25.2
N44-24	24	38	39	10	27.2
N44-25	25	40	40	10	27.2
N44-28	28	46	43	10	29.2
N44-30	30	46	45	10	30.2
N44-32	32	46	48	10	30.2
N44-33	33	48	48	10	39.2
N44-35	35	50	50	10	39.2
N44-38	38	56	56	13	42.2
N44-40	40	58	58	13	42.2

N47

Performance Capabilities

- Temperature:
–20℃ to 200℃, depend on o–ring material
- Pressure:
Up to 8 bar
- Speed:
Up to 10 m/s
- End play/axial float allowance
± 1mm

Sizes
10mm to 100mm

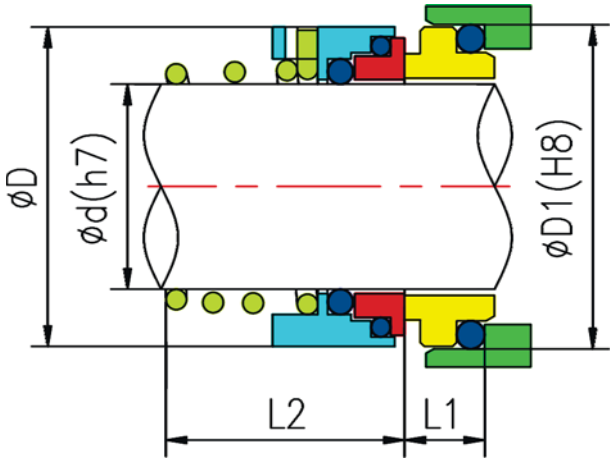

Materials Combination

- Face: Ceramic, SiC, TC
- Seat: Carbon, SiC, TC
- O-rings: NBR, EPDM, VITON, Aflas, FEP, Kalrez, Chemraz etc.
- Spring: SS304, SS316
- Metal parts: SS304, Ss316

型号/规格	d	D	D1	L1	L2
N47-10	10	19.0	18.1	5.5	20.2
N47-11	11	22.0	20.6	5.5	22.2
N47-12	12	22.0	20.6	5.5	22.2
N47-13	13	24.0	23.1	6.0	27.2
N47-14	14	24.0	23.1	6.0	27.2
N47-15	15	28.5	26.9	7.0	27.2
N47-16	16	28.5	26.9	7.0	28.2
N47-17	17	28.5	26.9	7.0	28.2
N47-18	18	32.5	30.9	8.0	30.2
N47-19	19	32.5	30.9	8.0	30.2
N47-20	20	32.5	30.9	8.0	30.2
N47-21	21	37.0	35.4	8.0	30.2
N47-22	22	37.0	35.4	8.0	30.2
N47-23	23	37.0	35.4	8.0	32.2
N47-24	24	37.0	35.4	8.0	32.2
N47-25	25	40.5	38.2	8.5	33.2
N47-26	26	40.5	38.2	8.5	33.2
N47-27	27	40.5	38.2	8.5	33.2
N47-28	28	46.5	43.3	9.0	36.2
N47-29	29	46.5	43.3	9.0	37.2
N47-30	30	46.5	43.3	9.0	37.2
N47-31	31	46.5	43.3	9.0	37.2
N47-32	32	46.5	43.3	9.0	37.2

型号/规格	d	D	D1	L1	L2
N47-33	33	56.5	53.5	11.5	48.2
N47-34	34	56.5	53.5	11.5	48.2
N47-35	35	56.5	53.5	11.5	48.2
N47-37	37	56.5	53.5	11.5	48.2
N47-38	38	63.0	60.5	11.5	48.2
N47-39	39	63.0	60.5	11.5	48.2
N47-40	40	63.5	60.5	11.5	48.2
N47-42	42	63.5	60.5	11.5	48.2
N47-43	43	63.5	60.5	11.5	48.2
N47-44	44	68.5	65.5	11.5	51.2
N47-45	45	68.5	65.5	11.5	51.2
N47-48	48	68.5	65.5	11.5	51.2
N47-49	49	68.5	65.5	11.5	51.2
N47-50	50	75.0	72.5	11.5	55.2
N47-55	55	75.0	72.5	11.5	57.2
N47-60	60	83.0	79.3	11.5	61.2
N47-65	65	88.0	84.5	11.5	63.2
N47-70	70	93.0	89.5	11.5	63.2
N47-75	75	98.0	94.5	11.5	68.2
N47-80	80	103.0	99.5	11.5	70.2
N47-85	85	117.0	105.5	13.5	72.2
N47-90	90	122.0	115.5	13.5	75.2
N47-95	95	129.0	116.5	13.5	75.2
N47-100	100	135.0	119.5	13.5	85.2

N71

Performance Capabilities

- Temperature:
–20℃ to 180℃, depend on o–ring material
- Pressure:
Up to 16 bar
- Speed:
Up to 15 m/s
- End play/axial float allowance
± 1mm

Sizes

16mm to 200mm
0.75” to 8”

Materials Combination

- Face: Carbon, SiC, TC
- Seat: Ceramic, SiC, TC
- O–rings: NBR, EPDM, VITON, Aflas, FEP, Kalrez, Chemraz etc.
- Spring: SS304, SS316, Hastelloy C
- Metal parts: SS304, SS316

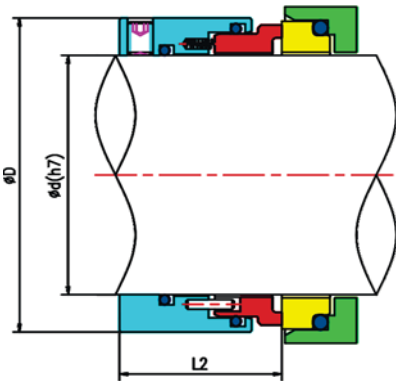

	d	D	L2
N71-1"	25.4	39.95	35.2
N71-1 1/8"	28.58	43.13	35.2
N71-1 1/4"	31.75	46.3	44.65
N71-1 3/8"	34.93	49.48	44.65
N71-1 1/2"	38.1	54.43	44.65
N71-1 5/8"	41.28	57.61	44.65
N71-1 3/4"	44.45	60.78	44.65
N71-1 7/8"	47.63	63.96	44.65
N71-2"	50.8	67.13	44.65
N71-2 1/8"	53.98	70.31	44.65
N71-2 1/4"	57.15	73.48	44.65
N71-2 3/8"	60.33	76.66	44.65
N71-2 1/2"	63.5	79.83	44.65
N71-2 5/8"	66.68	83.01	44.65
N71-2 3/4"	66.85	92.08	51
N71-2 7/8"	73.03	95.25	51
N71-3"	76.2	98.43	51
N71-3 1/8"	79.38	101.6	51
N71-3 1/4"	82.55	104.78	51
N71-3 3/8"	85.73	107.95	51
N71-3 1/2"	88.9	111.13	51
N71-3 5/8"	92.08	114.3	51
N71-3 3/4"	95.25	117.48	51
N71-3 7/8"	98.43	120.65	51
N71-4"	101.6	123.83	51
N71-4 1/8"	104.78	127	51
N71-4 1/4"	107.95	130.18	51
N71-4 3/8"	111.13	133.35	51
N71-4 1/2"	114.3	136.53	51
N71-4 3/4"	120.65	152.4	92.1
N71-5"	127	158.75	92.1
N71-5 1/4"	133.35	165.1	92.1
N71-5 1/2"	139.7	171.45	92.1
N71-5 3/4"	146.05	177.8	92.1
N71-6"	152.4	184.15	92.1
N71-6 1/4"	158.75	190.5	92.1
N71-6 1/2"	165.1	196.85	92.1
N71-6 3/4"	171.45	203.2	92.1
N71-7"	177.8	209.55	92.1
N71-7 1/4"	184.15	215.9	92.1
N71-7 1/2"	190.5	222.25	92.1
N71-7 3/4"	196.85	228.6	92.1
N71-8"	203.2	234.95	92.1

/	d	D	L2
N71-16	16	30.45	35
N71-18	18	32.28	35.2
N71-20	20	34.29	35.2
N71-22	22	36.3	35.2
N71-24	24	38.3	35.2
N71-25	25	39.29	35.2
N71-28	28	42.29	35.2
N71-30	30	44.3	35.2
N71-32	32	46.3	44.65
N71-33	33	47.9	44.65
N71-35	35	49.48	44.65
N71-38	38	54.28	44.65
N71-40	40	56.08	44.65
N71-43	43	59.08	44.65
N71-45	45	61.09	44.65
N71-48	48	64.11	44.65
N71-50	50	66.09	44.65
N71-55	55	71.07	44.65
N71-60	60	77.14	44.65
N71-65	65	83.01	44.65
N71-70	70	86.08	44.65
N71-75	75	98.43	51
N71-80	80	104.76	51
N71-85	85	107.95	51
N71-90	90	114.3	51
N71-95	95	117.48	51
N71-100	100	123.83	51
N71-110	110	133.35	51
N71-120	120	152.4	92.1
N71-125	125	158.75	92.1
N71-130	130	165.1	92.1
N71-135	135	171.45	92.1
N71-140	140	171.45	92.1
N71-145	145	177.8	92.1
N71-150	150	184.15	92.1
N71-155	155	190.5	92.1
N71-160	160	196.85	92.1
N71-165	165	196.85	92.1
N71-170	170	203.2	92.1
N71-175	175	209.55	92.1
N71-180	180	215.9	92.1
N71-185	185	215.9	92.1
N71-190	190	222.25	92.1
N71-195	195	228.6	92.1
N71-200	200	234.95	92.1

N91

Performance Capabilities

- Temperature:
–20℃ to 180℃, depend on o–ring material
- Pressure:
Up to 10 bar
- Speed:
Up to 10 m/s
- End play/axial float allowance
± 1mm

Sizes
18mm to 100mm

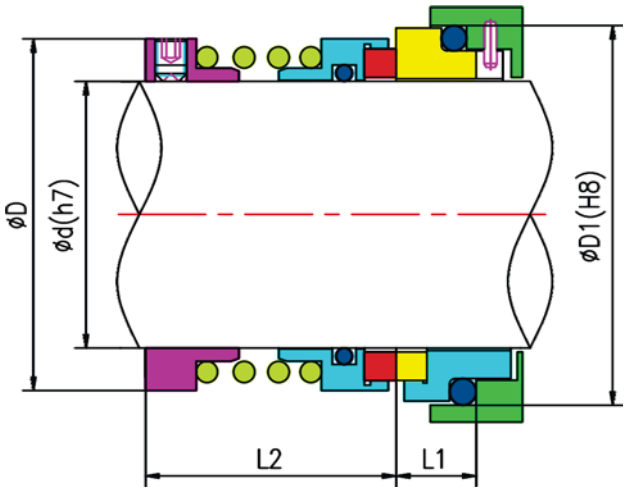

Materials Combination

- Face: Carbon, SiC, TC
- Seat: Ceramic, SiC, TC
- O–rings: NBR, EPDM, VITON, Aflas, FEP, Kalrez, Chemraz etc.
- Spring: SS304, SS316
- Metal parts: SS304, SS316

	d	D	D1	L1	L2
N91-18	18	32	33.0	10.0	35.0
N91-20	20	34	35.0	10.0	35.0
N91-22	22	36	37.0	10.0	35.0
N91-24	24	38	39.0	10.0	40.0
N91-25	25	39	40.0	10.0	40.0
N91-28	28	42	43.0	10.0	40.0
N91-30	30	44	45.0	10.0	40.0
N91-32	32	46	48.0	10.0	45.0
N91-33	33	47	48.0	10.0	45.0
N91-35	35	49	50.0	10.0	45.0
N91-38	38	54	56.0	11.0	44.0
N91-40	40	56	58.0	11.0	44.0
N91-43	43	59	61.0	11.0	49.0
N91-45	45	61	63.0	11.0	49.0
N91-48	48	64	66.0	11.0	49.0
N91-50	50	66	70.0	13.0	47.0
N91-53	53	69	73.0	13.0	57.0
N91-55	55	71	75.0	13.0	57.0
N91-58	58	78	78.0	13.0	57.0
N91-60	60	80	80.0	13.0	57.0
N91-63	63	83	83.0	13.0	57.0
N91-65	65	85	85.0	13.0	67.0
N91-68	68	88	90.0	15.3	64.7
N91-70	70	90	92.0	15.3	64.7
N91-75	75	99	97.0	15.3	64.7
N91-80	80	104	105.0	15.7	74.3
N91-85	85	109	110.0	15.7	74.3
N91-90	90	114	115.0	15.7	74.3
N91-95	95	119	120.0	15.7	74.3
N91-100	100	124	125.0	15.7	74.3

R11

Performance Capabilities

- Temperature:
-20℃ to 150℃, dependent on the elastomer
- Pressure:
Up to 10 bar
- Speed:
Up to 12 m/s
- End play/axial float allowance:
±0.1mm

Sizes
5/8" to 4"

Materials Combination

- Face: Carbon, SiC, TC
- Seat: Ceramic, SiC, TC
- Bellow: NBR, EPDM, VITON etc.
- Spring: SS304, SS316
- Metal parts: SS304, Ss316

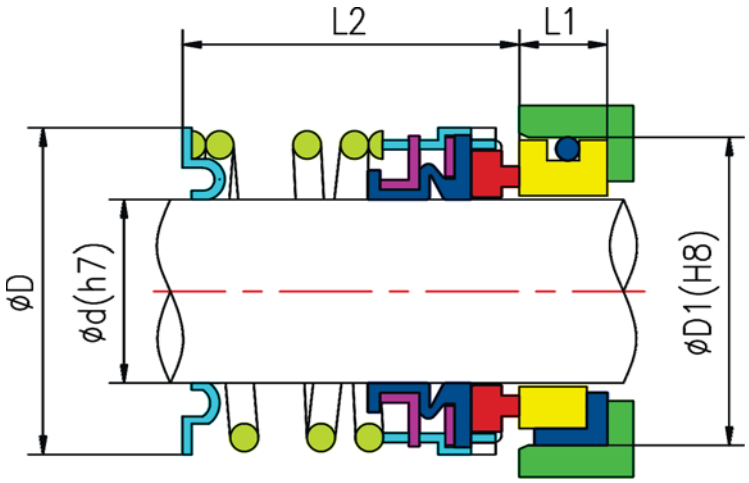

	d	D	D1	L1	L2
R11-5/8"	15.87	27.8	31.75	10.31	33.5
R11-3/4"	19.05	30.6	34.93	10.31	33.5
R11-7/8"	22.22	34.9	38.1	10.31	35.1
R11-1"	25.4	38.1	41.28	11.1	39.9
R11-1 1/8"	28.57	41.3	44.45	11.1	41.3
R11-1 1/4"	31.75	46	47.63	11.1	41.3
R11-1 3/8"	34.92	47.6	50.8	11.1	42.8
R11-1 1/2"	38.1	50.8	53.98	11.1	42.8
R11-1 5/8"	41.27	57.2	60.33	12.7	50.8
R11-1 3/4"	44.45	60.3	63.5	12.7	50.8
R11-1 7/8"	47.62	63.5	66.68	12.7	54
R11-2"	50.8	66.7	69.85	12.7	54
R11-2 1/8"	53.97	71.4	76.2	14.27	60.3
R11-2 1/4"	57.15	74.6	79.38	14.27	60.3
R11-2 3/8"	60.32	77.8	82.55	14.27	63.5
R11-2 1/2"	63.5	80.9	85.73	14.27	63.5
R11-2 5/8"	66.67	85.7	85.73	15.88	69.9
R11-2 3/4"	69.85	88.9	88.9	15.88	69.9
R11-2 7/8"	73.02	92.1	95.25	15.88	73
R11-3"	76.2	95.3	98.43	15.88	73
R11-3 1/8"	79.37	101.6	101.6	19.84	79.4
R11-3 1/4"	82.55	104.8	104.78	19.84	79.4
R11-3 3/8"	85.72	108	107.95	19.84	79.4
R11-3 1/2"	88.9	111.1	111.13	19.84	79.4
R11-3 5/8"	92.07	114.3	114.3	19.84	82.6
R11-3 3/4"	95.25	117.5	117.48	19.84	82.6
R11-3 7/8"	98.42	120.7	120.65	19.84	85.7
R11-4"	101.6	123.8	123.83	19.84	85.7

R12

Performance Capabilities

- Temperature:
-20℃ to 200℃, dependent on the elastomer
- Pressure:
Up to 5 bar
- Speed:
Up to 12 m/s
- End play/axial float allowance:
±0.1mm

Sizes
3/8", 1/2", 5/8",
3/4", 7/8", 1"

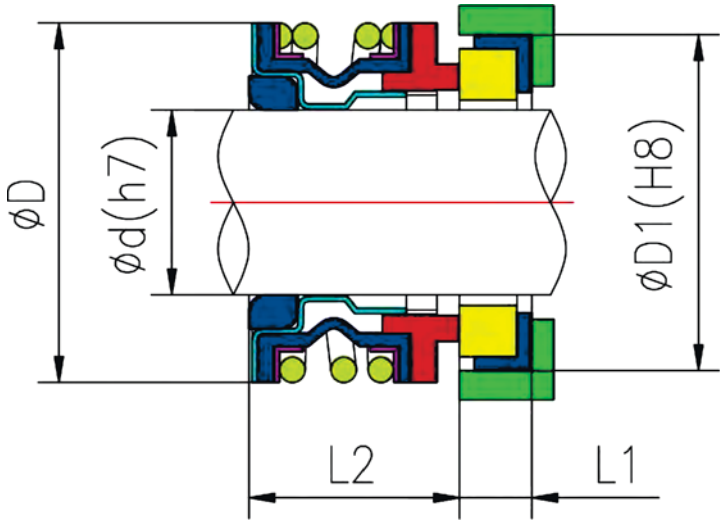

Materials Combination

- Face: Carbon, SiC, TC
- Seat: Ceramic, SiC, TC
- Bellow: NBR, EPDM, VITON etc.
- Spring: SS304, SS316
- Metal parts: SS304, Ss316

	d	D	D1	L1	L2
R12-3/8"A	9.53	23.8	22.23	6.35	16.08
R12-3/8"	9.53	26.97	25.4	7.93	16.86
R12-1/2"A	12.7	26.97	25.4	6.35	16.86
R12-1/2"	12.7	26.97	25.4	7.93	16.86
R12-5/8"	15.88	30.94	31.75	10.31	18.44
R12-3/4"	19.05	34.11	34.93	10.31	18.44
R12-7/8"	22.23	42.85	41.28	11.1	20.82
R12-1"	25.4	42.85	41.28	11.1	20.82

R13

Performance Capabilities

- Temperature:
–20℃ to 200℃, dependent on the elastomer
- Pressure:
Up to 6 bar
- Speed:
Up to 10 m/s
- End play/axial float allowance:
±0.1mm

Sizes
3/8”, 1/2”, 5/8”,
3/4”, 7/8”, 1”

Materials Combination

- Face: Carbon, SiC, TC
- Seat: Ceramic, SiC, TC
- Bellow: NBR, EPDM, VITON etc.
- Spring: SS304, SS316
- Metal parts: SS304, Ss316

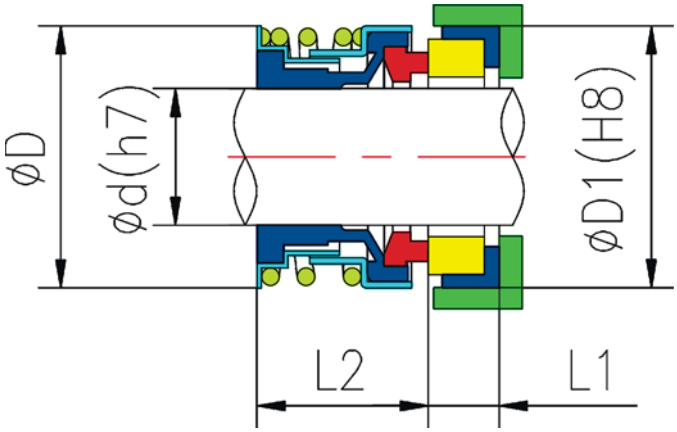

	d	D	D1	L1	L2
R13-3/8"A	9.53	23.29	22.23	6.35	16.08
R13-3/8"	9.53	23.29	22.23	7.14	16.86
R13-1/2"A	12.7	23.29	25.4	6.35	16.86
R13-1/2"	12.7	23.29	25.4	7.93	16.86
R13-5/8"	15.88	30.1	31.75	10.3	18.44
R13-3/4"	19.05	33.07	34.93	10.3	18.44
R13-7/8"	22.23	36.3	38.1	10.3	20.82
R13-1"	25.4	39.42	41.28	11.1	20.82

R14

Performance Capabilities

- Temperature:
-30℃ to 200℃, dependent on the elastomer
- Pressure:
Up to 12 bar
- Speed:
Up to 12 m/s
- End play/axial float allowance:
±0.1mm

Sizes
16mm to 120mm
5/8" to 2.5

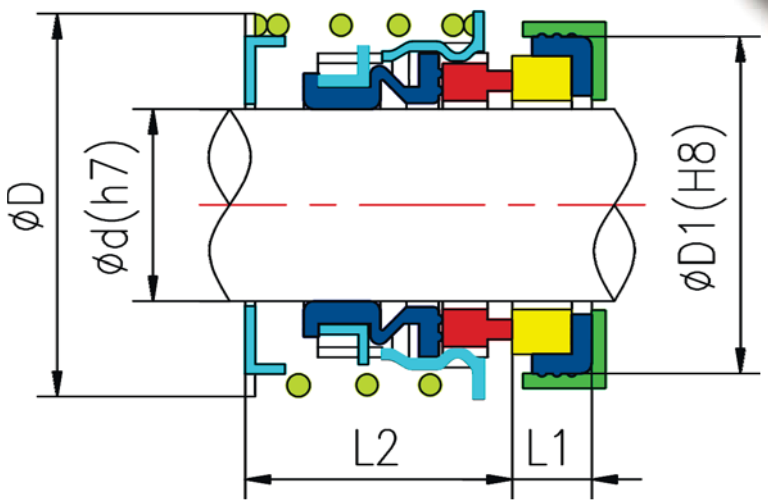

Materials Combination

- Face: Carbon, SiC, TC
- Seat: Ceramic, SiC, TC
- Bellow: NBR, EPDM, VITON etc.
- Spring: SS304, SS316
- Metal parts: SS304, Ss316

	d	D	D1	L1	L2
R14-16	16	34	30	8	25.2
R14-18	18	36.8	32	8	25.2
R14-20	20	38.8	34	8	25.2
R14-22	22	41.5	36	8	25.2
R14-25	25	44.8	39	8	26.2
R14-28	28	48.5	43	8	26.2
R14-30	30	52	48	8	26.2
R14-35	35	57	53	10	30.2
R14-40	40	67	58	10	34.2
R14-45	45	73	63	10	36.2
R14-50	50	79	68	10	41.2
R14-55	55	84	73	12	41.2
R14-60	60	90	79	12	41.2
R14-65	65	98.5	86	12	49.2
R14-70	70	103.5	91	12	52.2
R14-75	75	110.5	96	12	52.2
R14-80	80	120	105	14	56.2
R14-85	85	125	110	14	56.2
R14-90	90	132	115	14	56.2
R14-95	95	137	120	14	56.2
R14-100	100	144	125	14	62.2
R14-110	110	157	135	16	62.2
R14-120	120	169.5	145	16	72.2

	d	D	D1	L1	L2
R14-5/8"	15.87	34	30.95	10.3	25.2
R14-3/4"	19.05	38.8	34.15	10.3	25.2
R14-7/8"	22.22	41.5	37.3	10.3	25.2
R14-1"	25.4	44.8	40.5	10.3	25.2
R14-1 1/8"	28.57	48.5	47.65	11.9	33.2
R14-1 1/4"	31.75	57	50.8	11.9	33.2
R14-1 3/8"	34.92	57	54	11.9	33.2
R14-1 1/2"	38.1	67	57.15	11.9	33.2
R14-1 5/8"	41.27	67	60.35	11.9	33.2
R14-1 3/4"	44.45	73	63.5	11.9	41.2
R14-1 7/8"	47.62	73	66.7	11.9	41.2
R14-2"	50.8	79	69.85	13.5	41.2
R14-2 1/8"	53.97	84	73.05	13.5	41.2
R14-2 1/4"	57.15	84	76.2	13.5	41.2
R14-2 3/8"	60.32	90	79.4	13.5	41.2
R14-2 1/2"	63.5	94	82.55	13.5	41.2

R15 R16 R17

Performance Capabilities

- Temperature:
–40℃ to 150℃, dependent on the elastomer
- Pressure:
Up to 12 bar
- Speed:
Up to 13 m/s
- End play/axial float allowance:
±0.1mm

Sizes
10mm to 100mm
3/8" to 4"

Materials Combination

- Face: Carbon, SiC, TC
- Seat: Ceramic, SiC, TC
- Bellow: NBR, EPDM, VITON etc.
- Spring: SS304, SS316
- Metal parts: SS304, Ss316

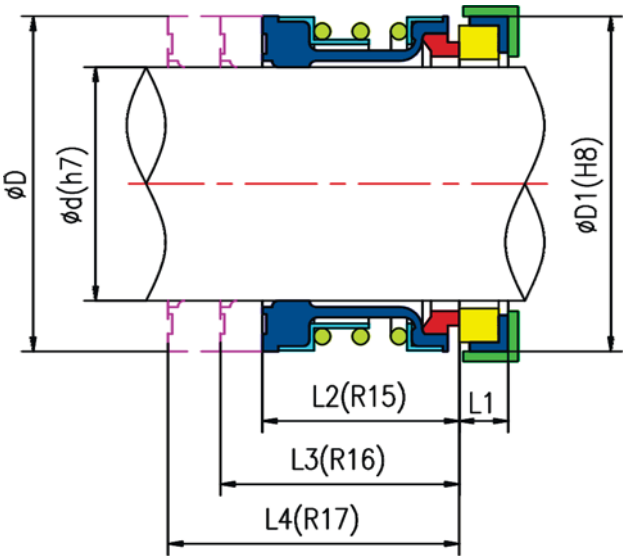

	d	D	D1	L1	L2	L3	L4
R15-10	10	20	21	5	15.2	27.7	35.2
R15-12	12	22	23	6	15.2	26.7	34.2
R15-14	14	24	25	6	15.2	29.2	34.2
R15-15	15	25	26	6	15.2	29.2	34.2
R15-16	16	26	27	6	15.2	29.2	34.2
R15-18	18	32	33	6	20.2	31.7	39.2
R15-20	20	34	35	6	20.2	31.7	39.2
R15-22	22	36	37	6	20.2	31.7	39.2
R15-24	24	38	39	6	20.2	34.2	44.2
R15-25	25	39	40	6	20.2	34.2	44.2
R15-28	28	42	43	6	26.2	36.7	44.2
R15-30	30	44	45	7	26.2	35.7	43.2
R15-32	32	46	48	7	26.2	35.7	48.2
R15-33	33	47	48	7	26.2	35.7	48.2
R15-35	35	49	50	8	26.2	34.7	47.2
R15-38	38	54	56	8	30.2	37.2	47.2
R15-40	40	56	58	8	30.2	37.2	47.2
R15-43	43	59	61	8	30.2	37.2	52.2
R15-45	45	61	63	8	30.2	37.2	52.2
R15-48	48	64	66	10	30.2	35.2	50.2
R15-50	50	66	70	10	30.2	37.7	50.2
R15-53	53	69	73	10	30.2	37.7	60.2
R15-55	55	71	75	10	30.2	37.7	60.2
R15-58	58	78	78	10	33.2	42.7	60.2
R15-60	60	80	80	12	33.2	40.7	58.2
R15-63	63	83	83	12	33.2	40.7	58.2
R15-65	65	85	85	12	33.2	40.7	68.2
R15-68	68	88	90	12	33.2	40.7	68.2
R15-70	70	90	92	12	33.2	48.2	68.2
R15-75	75	99	97	12	40.2	48.2	68.2
R15-80	80	104	105	14	40.2	47.7	77.7
R15-85	85	109	110	14	40.2	47.7	77.7
R15-90	90	114	115	14	40.2	52.7	77.7
R15-95	95	119	120	14	40.2	52.7	77.7
R15-100	100	124	125	14	40.2	52.7	77.7

	d	D	D1	L1	L2
R15-3/8"	9.525	20	22.225	7.9	15.2
R15-1/2"	12.7	24	25.4	7.9	15.2
R15-5/8"	15.875	26	31.75	10.3	15.2
R15-3/4"	19.05	32	34.93	10.3	20.2
R15-7/8"	22.225	36	38.1	10.3	20.2
R15-1"	25.4	39	41.28	11.1	20.2
R15-1 1/8"	28.575	42	44.45	11.1	26.2
R15-1 1/4"	31.75	46	47.63	11.1	26.2
R15-1 3/8"	34.925	49	50.8	11.1	26.2
R15-1 1/2"	38.1	54	53.98	11.1	30.2
R15-1 5/8"	41.275	56	60.33	12.7	30.2
R15-1 3/4"	44.45	61	63.5	12.7	30.2
R15-1 7/8"	47.625	64	66.68	12.7	30.2
R15-2"	50.8	66	69.85	12.7	30.2
R15-2 1/8"	53.975	69	76.2	14.3	30.2
R15-2 1/4"	57.15	77	79.38	14.3	33.2
R15-2 3/8"	60.325	80	82.55	14.3	33.2
R15-2 1/2"	63.5	83	85.73	14.3	33.2
R15-2 5/8"	66.675	88	85.73	15.9	33.2
R15-2 3/4"	69.85	89	88.9	15.9	33.2
R15-2 7/8"	73.025	96	95.25	15.9	33.2
R15-3"	76.2	99	98.425	15.9	40.2
R15-3 1/8"	79.375	103	101.6	19.8	40.2
R15-3 1/4"	82.55	104	104.78	19.8	40.2
R15-3 3/8"	85.725	108	107.95	19.8	40.2
R15-3 1/2"	88.9	112	111.12	19.8	40.2
R15-3 5/8"	92.075	114	114.3	19.8	40.2
R15-3 3/4"	95.25	118	117.48	19.8	40.2
R15-3 7/8"	98.425	122	120.65	19.8	40.2
R15-4"	101.6	124	123.83	19.8	40.2

R18

Performance Capabilities

- Temperature:
-20℃ to 150℃, dependent on the elastomer
- Pressure:
Up to 8 bar
- Speed:
Up to 10 m/s
- End play/axial float allowance:
±0.1mm

Sizes
1/2" to 3"

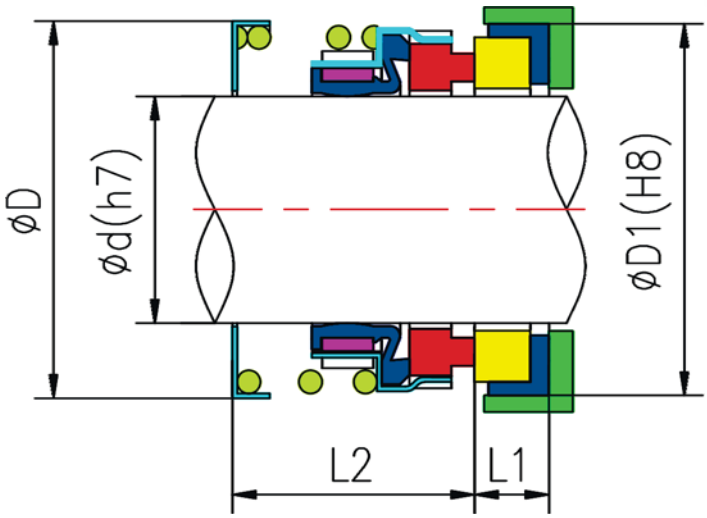

Materials Combination

- Face: Carbon, SiC, TC
- Seat: Ceramic, SiC, TC
- Bellow: NBR, EPDM, VITON etc.
- Spring: SS304, SS316
- Metal parts: SS304, Ss316

	d	D	D1	L1	L2
R18-1/2"	12.7	23.88	25.4	7.92	20.82
R18-5/8"	15.875	26.7	31.75	10.29	22.43
R18-3/4"	19.05	31.09	34.93	10.29	22.43
R18-7/8"	22.225	33.4	38.1	10.29	24
R18-1"	25.4	43.18	41.28	11.1	25.6
R18-1 1/8"	28.575	46.28	44.45	11.1	27.17
R18-1 1/4"	31.75	49.4	47.63	11.1	27.17
R18-1 3/8"	34.925	52.58	50.8	11.1	28.78
R18-1 1/2"	38.1	55.8	53.98	11.1	28.78
R18-1 5/8"	41.275	62.2	60.33	12.7	35.15
R18-1 3/4"	44.45	66	63.5	12.7	35.15
R18-1 7/8"	47.625	66.6	66.68	12.7	38.3
R18-2"	50.8	73	69.85	12.7	38.3
R18-2 1/8"	53.9	73.3	76.2	14.27	43.05
R18-2 1/4"	57.1	78.41	79.38	14.27	43.05
R18-2 3/8"	60.3	82	82.55	14.27	46.25
R18-2 1/2"	63.5	84.87	85.73	14.27	46.25
R18-2 5/8"	66.6	88.4	85.73	15.9	49.4
R18-2 3/4"	69.8	92.58	88.9	15.9	49.4
R18-2 7/8"	73	94.85	95.25	15.9	52.57
R18-3"	76.2	101.9	98.43	15.9	52.57

R19

Performance Capabilities

- Temperature:
–30℃ to 200℃, dependent on the elastomer
- Pressure:
Up to 12 bar
- Speed:
Up to 12 m/s
- End play/axial float allowance:
±0.1mm

Sizes
14mm to 100mm

Materials Combination

- Face: Carbon, SiC, TC
- Seat: Ceramic, SiC, TC
- Bellow: NBR, EPDM, VITON etc.
- Spring: SS304, SS316
- Metal parts: SS304, Ss316

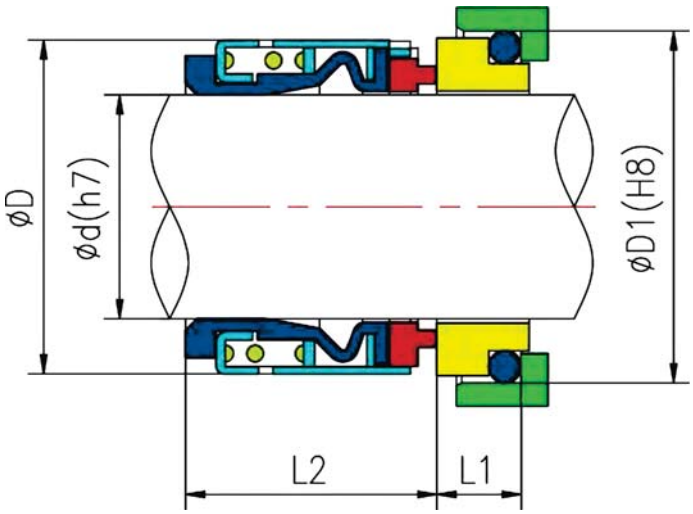

	d	D	D1	L1	L2
R19-14	14	24	25	12	23.2
R19-16	16	26	27	12	23.2
R19-18	18	32	33	13.5	24.2
R19-20	20	34	35	13.5	24.2
R19-22	22	36	37	13.5	24.2
R19-24	24	38	39	13.5	26.9
R19-25	25	39	40	13	27.2
R19-28	28	42	43	12.5	30.2
R19-30	30	44	45	11.9	30.7
R19-32	32	46	48	11.9	30.7
R19-33	33	47	48	11.9	30.7
R19-35	35	49	50	11.9	30.7
R19-38	38	54	56	12.9	32.2
R19-40	40	56	58	12.9	32.2
R19-43	43	59	61	12.9	32.2
R19-45	45	61	63	12.9	32.2
R19-48	48	64	66	12.9	32.2
R19-50	50	66	70	13.4	34.2
R19-53	53	69	73	13.4	34.2
R19-55	55	71	75	13.4	34.2
R19-58	58	78	78	13.4	39.2
R19-60	60	80	80	13.4	39.2
R19-63	63	83	83	13.4	39.2
R19-65	65	85	85	13.4	39.2
R19-68	68	88	90	13.4	39.2
R19-70	70	89	92	14.5	45.7
R19-75	75	96	97	14.5	45.7
R19-80	80	104	105	15	45.2
R19-85	85	108	110	15	45.2
R19-90	90	114	115	15	50.2
R19-95	95	118	120	15	50.2
R19-100	100	124	125	15	50.2

R20 R21 R22 R23

Performance Capabilities

- Temperature:
–30℃ to 200℃, dependent on the elastomer
- Pressure:
Up to 12 bar
- Speed:
Up to 12 m/s
- End play/axial float allowance:
±0.1mm

Sizes
10mm to 100mm

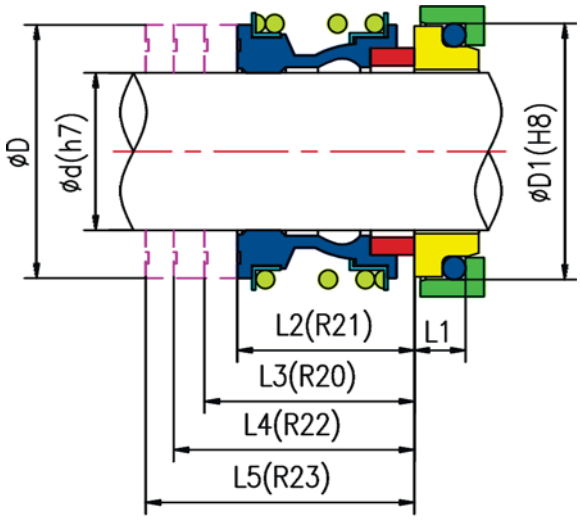

Materials Combination

- Face: Carbon, SiC, TC
- Seat: Ceramic, SiC, TC
- Bellow: NBR, EPDM, VITON etc.
- Spring: SS304, SS316
- Metal parts: SS304, Ss316

	d	D	D1	L1	L2	L3	L4	L5
R21-10	10	22	19.2	6.5	14.7	25.5	26	33.5
R21-12	12	24.5	21.6	5.5	15.2	25.5	26	33.5
R21-14	14	28	24.6	5.5	17.2	25.5	28.5	33.5
R21-15	15	28	24.6	6.5	17.2	25.5	28.5	33.5
R21-16	16	28	28	7.5	17.2	25.5	28.5	33.5
R21-18	18	31.5	30	8	19.7	25.5	30.1	37.7
R21-19	19	36.5	35	7.5	21.7	25.5	30.1	37.7
R21-20	20	36.5	35	7.5	21.7	25.5	30.1	37.7
R21-22	22	36.5	35	7.5	21.7	25.5	30.1	37.7
R21-24	24	42	38	7.5	22.7	25.5	32.7	42.7
R21-25	25	42	38	7.5	23.2	25.5	32.7	42.7
R21-28	28	48.5	42	9	26.7	33.5	35.2	42.7
R21-30	30	48.5	45	10.5	26.7	33.5	35.2	42.7
R21-32	32	53	48	10.5	27.7	33.5	35.2	47.7
R21-33	33	53	50	11	27.7	33.5	35.2	47.7
R21-35	35	56.5	52	11	28.7	33.5	35.2	47.7
R21-38	38	58.5	55	10.5	30.2	33.5	36.2	46.2
R21-40	40	61.5	58	10.8	30.2	33.5	36.2	46.2
R21-42	42	65	62	12	30.2	41.5	36.2	51.2
R21-43	43	65	62	12	30.2	41.5	36.2	51.2
R21-45	45	67.5	64	11.5	30.2	41.5	36.2	51.2
R21-48	48	70	68.4	11.5	30.7	41.5	36.2	51.2
R21-50	50	73.5	69.3	11.5	30.7	41.5	38.2	50.7
R21-53	53	78	72.3	12.5	33.2	41.5	36.7	59.2
R21-55	55	80.5	75.4	13.5	35.2	41.5	36.7	59.2
R21-58	58	85	78.4	13.5	37.2	41.5	41.7	59.2
R21-60	60	88	80.4	13.5	38.2	41.5	41.7	59.2
R21-65	65	93	85.4	13	40.2	49.5	41.7	69.2
R21-68	68	96	91.5	13.7	40.2	49.5	41.3	69
R21-70	70	99	92	13	40.2	49.5	49	69
R21-75	75	106.5	99	14	40.2	52.5	49	69
R21-80	80	111.5	104	15	40.2	56.5	48.2	78.2
R21-85	85	119.5	109	15	41.2	56.5	46.2	76.2
R21-90	90	126.5	114	15	45.2	59.5	51.2	76.2
R21-95	95	131.5	120.3	16	46.2	59.5	51.2	76.2
R21-100	100	136.5	123.3	16	47.2	62.5	51.2	76.2

R24

Performance Capabilities

- Temperature:
-20℃ to 150℃, dependent on the elastomer
- Pressure:
Up to 8 bar
- Speed:
Up to 10 m/s
- End play/axial float allowance:
±0.1mm

Sizes
8mm to 50mm
3/8" to 2"

Materials Combination

- Face: Carbon, SiC, TC
- Seat: Ceramic, SiC, TC
- Bellow: NBR, EPDM, VITON etc.
- Spring: SS304, SS316
- Metal parts: SS304, Ss316

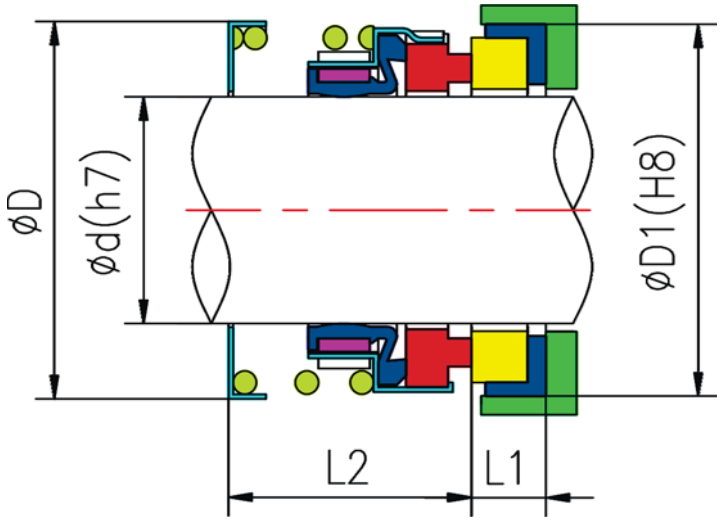

	d	D	D1	L1	L2
R24-8	8	18.2	21	7	11.2
R24-9	9	18.2	24	7	16.2
R24-10	10	20.6	24	7	16.2
R24-11	11	20.6	24	7	16.2
R24-12	12	21.8	26	7	17.2
R24-13	13	21.8	26	7	17.2
R24-14	14	26.4	28	7	18.2
R24-15	15	26.4	28	7	18.2
R24-16	16	26.4	32	8	19.2
R24-17	17	29.5	32	8	19.2
R24-18	18	29.5	35	8	19.2
R24-19	19	29.5	35	8	19.2
R24-20	20	31.6	38	8	20.2
R24-22	22	33.6	40	8	20.2
R24-25	25	39.6	44	9	20.2
R24-28	28	45	46	9	21.2
R24-30	30	46.6	50	9	22.2
R24-32	32	46.6	54	9	24.2
R24-35	35	50.8	58	10	26.2
R24-38	38	54.3	60	10	27.2
R24-40	40	57.3	64	10	28.2
R24-45	45	61.3	66	10	30.2
R24-50	50	67.8	72	10	32.2

	d	D	D1	L1	L2
R24-3/8"	9.525	23.5	22.225	6.4	22.2
R24-1/2"	12.7	26	25.4	6.4	22.2
R24-5/8"	15.875	30	31.75	8.7	23.8
R24-3/4"	19.05	32.5	34.925	8.7	23.8
R24-7/8"	22.225	37.5	38.1	8.7	25.4
R24-1"	25.4	44	41.275	9.5	27
R24-1 1/8"	28.575	48	44.45	9.5	28.6
R24-1 1/4"	31.75	50	47.625	9.5	28.6
R24-1 3/8"	34.925	54.5	50.8	9.5	30.2
R24-1 1/2"	38.1	58.5	53.975	9.5	30.2
R24-1 5/8"	41.275	64	60.325	11.1	36.5
R24-1 3/4"	44.45	67	63.5	11.1	36.5
R24-1 7/8"	47.625	71	66.675	11.1	39.7
R24-2"	50.8	73.5	69.85	11.1	39.7

R26

Performance Capabilities

- Temperature:
–20℃ to 100℃, dependent on the elastomer
- Pressure:
Up to 5 bar
- Speed:
Up to 10 m/s
- End play/axial float allowance:
±0.1mm

Sizes
6mm to 70mm

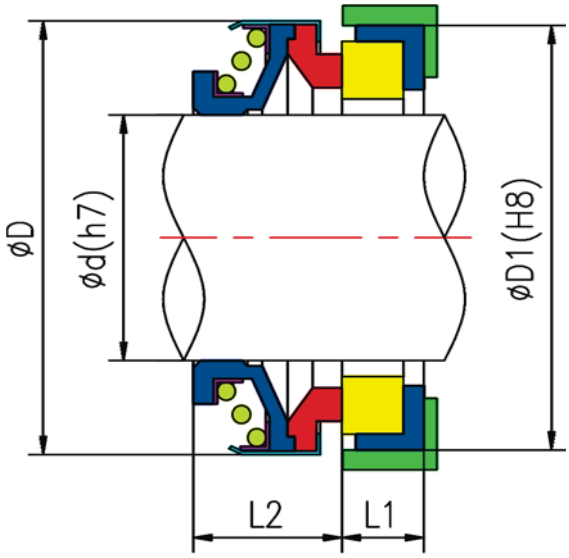

Materials Combination

- Face: Carbon, SiC, TC
- Seat: Ceramic, SiC, TC
- Bellow: NBR, EPDM, VITON etc.
- Spring: SS304, SS316
- Metal parts: SS304, Ss316

	d	D	d1	L1	L2
R26-6	6	18	22	4	8.7
R26-8	8	18	22	4	8.7
R26-8A	8	18	22	4	11.2
R26-8B	8	24	26	5.5	11.2
R26-8C	8	24	26	8	11.2
R26-9	9	24	26	5.5	11.2
R26-9A	9	24	26	8	11.2
R26-10	10	24	26	5.5	11.2
R26-10A	10	24	26	8	11.2
R26-11	11	24	26	5.5	11.2
R26-11A	11	24	26	8	11.2
R26-12	12	24	26	5.5	13.2
R26-12A	12	24	26	8	13.2
R26-12B	12	32	29.5	8	13.2
R26-12C	12	32	38	8	13.2
R26-13	13	24	26	5.5	13.2
R26-13A	13	24	26	8	13.2
R26-14	14	32	29.5	8	13.2
R26-14A	14	32	38	8	13.2
R26-14B	14	35	29.5	8	13.2
R26-14C	14	35	38	8	13.2
R26-15	15	32	29.5	8	13.2
R26-15A	15	32	38	8	13.2
R26-15B	15	35	29.5	8	13.2
R26-15C	15	35	38	8	13.2

	d	D	d1	L1	L2
R26-16	16	32	30	8	13.2
R26-16A	16	32	38	8	13.2
R26-16B	16	35	30	8	13.2
R26-16C	16	35	38	8	13.2
R26-16D	16	39	42	8	13.2
R26-17	17	39	42	8	13.2
R26-18	18	39	42	8	13.2
R26-19	19	39	42	8	13.2
R26-20	20	39	42	8	13.2
R26-20A	20	42	45	10	13.2
R26-22	22	42	45	10	13.2
R26-24	24	47	50	10	14.2
R26-25	25	47	50	10	14.2
R26-28	28	54	57	10	15.2
R26-30	30	54	57	10	15.2
R26-32	32	54	57	10	15.2
R26-35	35	60	63	10	16.2
R26-38	38	65	68	12	18.2
R26-40	40	65	68	12	18.2
R26-45	45	70	73	12	20.2
R26-50	50	85	88	15	23.2
R26-55	55	85	88	15	23.2
R26-60	60	105	110	15	30.2
R26-65	65	105	110	15	30.2
R26-70	70	105	110	15	32.3

R91

Performance Capabilities

- Temperature:
-20℃ to 150℃, dependent on the elastomer
- Pressure:
Up to 8 bar
- Speed:
Up to 10 m/s
- End play/axial float allowance:
±0.1mm

Sizes
14mm to 90mm

Materials Combination

- Face: Carbon, SiC, TC
- Seat: Ceramic, SiC, TC
- Bellow: NBR, EPDM, VITON etc.
- Spring: SS304, SS316
- Metal parts: SS304, Ss316

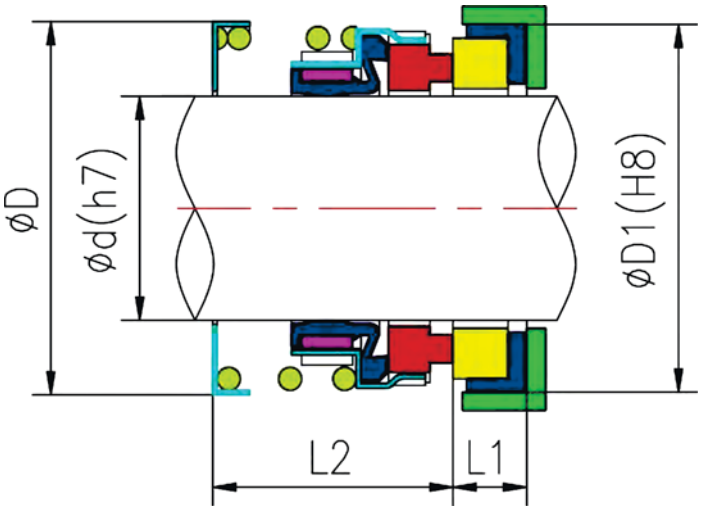

	d	D	D1	L1	L2
R91-14	14	27.5	30	5	18.7
R91-16	16	28.5	32	5	21
R91-18	18	31.2	35	7.5	22.5
R91-20	20	31.7	35	8	21
R91-24	24	40.2	39	8	25.5
R91-25	25	40.2	40	8	25.5
R91-28	28	44.1	43	8	25.5
R91-30	30	45.1	45	9	25.5
R91-32	32	49	48	9	33.5
R91-33	33	49	48	9	33.5
R91-35	35	50.2	50	9	33.5
R91-38	38	55.3	56	9	33.5
R91-40	40	57	58	9	33.5
R91-43	43	60.7	61	9.5	36.5
R91-45	45	62.5	63	9.5	38
R91-48	48	66.5	66	9.5	38
R91-50	50	68.6	70	9.5	38
R91-53	53	70.8	73	9.5	41
R91-55	55	72.4	75	9.5	41
R91-58	58	80	78	9.5	42
R91-60	60	83	80	9.5	42
R91-65	65	87.2	85	9.5	43
R91-70	70	91.6	92	11	45
R91-75	75	99.4	97	12	48
R91-80	80	104.6	104	12	55
R91-85	85	111	109	12	64.2
R91-90	90	113	114	12	66.2

R92

Performance Capabilities

- Temperature:
–20℃ to 150℃, dependent on the elastomer
- Pressure:
Up to 8 bar
- Speed:
Up to 10 m/s
- End play/axial float allowance:
±0.1mm

Sizes
10mm to 75mm
3/8" to 3"

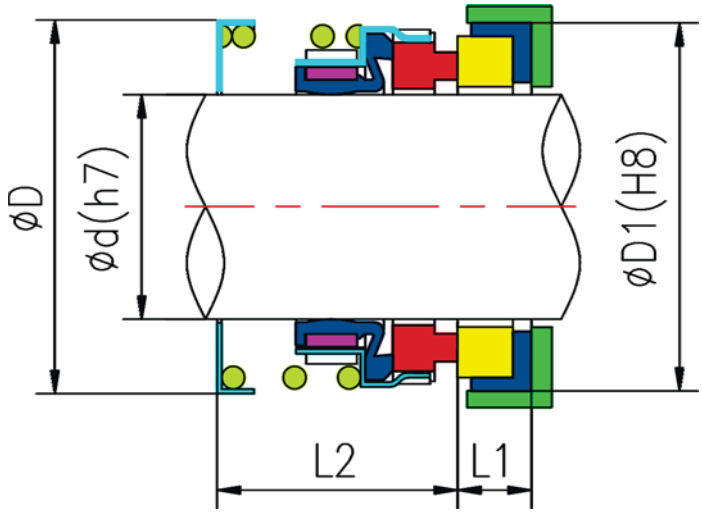

Materials Combination

- Face: Carbon, SiC, TC
- Seat: Ceramic, SiC, TC
- Bellow: NBR, EPDM, VITON etc.
- Spring: SS304, SS316
- Metal parts: SS304, Ss316

	d	D	D1	L1	L2
R92-10	10	22.95	24.6	8.74	25.6
R92-12	12	23.9	27.79	8.74	25.6
R92-13	13	23.9	27.79	8.74	25.6
R92-14	14	26.7	30.95	10.32	25.6
R92-15	15	26.7	30.95	10.32	25.6
R92-16	16	26.7	30.95	10.32	25.6
R92-18	18	31.1	34.15	10.32	25.6
R92-19	19	31.1	34.15	10.32	25.6
R92-20	20	33.4	35.7	10.32	25.6
R92-22	22	33.4	37.3	10.32	25.6
R92-24	24	39.2	40.5	10.32	25.6
R92-25	25	39.2	40.5	10.32	25.6
R92-28	28	46.3	47.63	11.99	33.54
R92-30	30	49.4	50.8	11.99	33.54
R92-32	32	49.4	50.8	11.99	33.54
R92-33	33	52.6	53.98	11.99	33.54
R92-34	34	52.6	53.98	11.99	33.54
R92-35	35	52.6	53.98	11.99	33.54
R92-38	38	55.8	57.15	11.99	33.54
R92-40	40	62.2	60.35	11.99	33.54
R92-42	42	66	63.5	11.99	40.68
R92-43	43	66	63.5	11.99	40.68
R92-44	44	66	63.5	11.99	40.68
R92-45	45	66	63.5	11.99	40.68
R92-48	48	66.6	66.7	11.99	40.68
R92-50	50	71.65	69.85	11.99	40.68
R92-53	53	73.3	73.05	13.5	41.2
R92-55	55	78.4	76.2	13.5	41.2
R92-58	58	82	79.4	13.5	41.2
R92-60	60	82	79.4	13.5	41.2
R92-63	63	84.9	82.55	13.5	41.2
R92-65	65	88.4	92.1	15.9	49.2
R92-70	70	92.6	95.52	15.9	49.2
R92-73	73	94.85	98.45	15.9	49.2
R92-75	75	101.9	101.65	15.9	49.2

	d	D	D1	L1	L2
R92-3/8"	9.5	22.95	24.6	8.74	25.6
R92-1/2"	12.7	23.9	27.79	8.74	25.6
R92-5/8"	15.8	26.7	30.95	10.32	25.6
R92-3/4"	19.1	31.1	34.15	10.32	25.6
R92-7/8"	22.2	33.4	37.3	10.32	25.6
R92-1"	25.4	43.2	40.5	10.32	25.6
R92-11/8"	28.6	46.3	47.63	11.99	33.54
R92-11/4"	31.7	49.4	50.8	11.99	33.54
R92-13/8"	34.9	52.6	53.98	11.99	33.54
R92-11/2"	38.1	55.8	57.15	11.99	33.54
R92-15/8"	41.2	62.2	60.35	11.99	33.54
R92-13/4"	44.4	66	63.5	11.99	40.68
R92-17/8"	47.6	66.6	66.7	11.99	40.68
R92-2"	50.8	73	69.85	11.99	40.68
R92-21/8"	53.9	73.3	73.05	13.5	41.2
R92-21/4"	57.1	78.4	76.2	13.5	41.2
R92-23/8"	60.3	82	79.4	13.5	41.2
R92-21/2"	63.5	84.9	82.55	13.5	41.2
R92-25/8"	66.6	88.4	92.1	15.9	49.2
R92-23/4"	69.8	92.6	95.25	15.9	49.2
R92-27/8"	73	94.85	98.45	15.9	49.2
R92-3"	76.2	101.9	101.7	15.9	49.2

R93

Performance Capabilities

- Temperature:
-20℃ to 150℃, dependent on the elastomer
- Pressure:
Up to 8 bar
- Speed:
Up to 10 m/s
- End play/axial float allowance:
±0.1mm

Sizes
10mm to 100mm

Materials Combination

- Face: Carbon, SiC, TC
- Seat: Ceramic, SiC, TC
- Bellow: NBR, EPDM, VITON etc.
- Spring: SS304, SS316
- Metal parts: SS304, Ss316

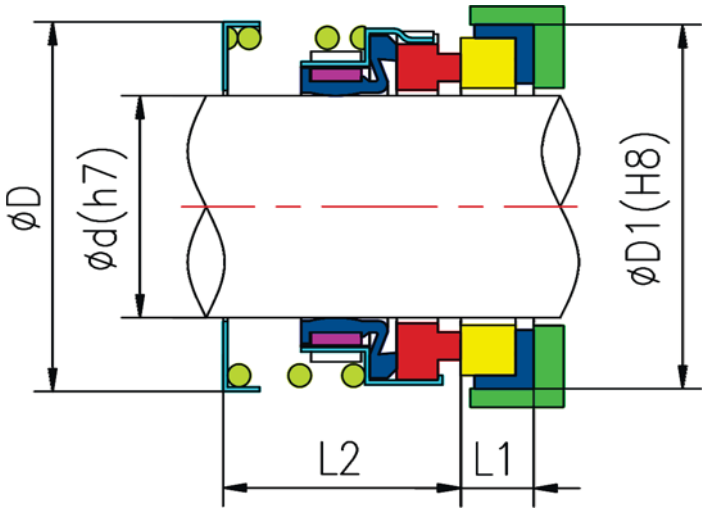

	d	D	D1	L1	L2
R93-10	10	20	21	8.5	24.1
R93-12	12	21.7	23	8.5	24.1
R93-14	14	24.5	25	8.5	26.7
R93-16	16	26.65	27	8.5	26.7
R93-18	18	30.35	33	10	27.7
R93-20	20	31.75	35	10	27.7
R93-22	22	33.55	37	10	27.7
R93-24	24	38.3	39	10	30.2
R93-25	25	38.3	40	10	30.2
R93-28	28	42.2	43	10	32.7
R93-30	30	43.95	45	10	32.7
R93-32	32	45.7	48	10	32.7
R93-33	33	46.75	48	10	32.7
R93-35	35	49.1	50	10	32.7
R93-38	38	52.4	56	11	34.2
R93-40	40	55.7	58	11	34.2
R93-43	43	55.8	61	11	34.2
R93-45	45	61.2	63	11	34.2
R93-48	48	64.35	66	11	34.2
R93-50	50	67.35	70	13	34.7
R93-53	53	70.65	73	13	34.7
R93-55	55	71.65	75	13	34.7
R93-58	58	78.4	78	13	39.7
R93-60	60	78.4	80	13	39.7
R93-63	63	81.5	83	13	39.7
R93-65	65	84.3	85	13	39.7
R93-68	68	89.65	90	15.3	37.4
R93-70	70	89.65	92	15.3	44.9
R93-75	75	96.8	97	15.3	44.9
R93-80	80	104	105	15.7	44.5
R93-85	85	107.95	110	15.7	44.5
R93-90	90	111.1	115	15.7	49.5
R93-95	95	119	120	15.7	49.5
R93-100	100	124	125	15.7	49.5

T11 T12

Performance Capabilities

- Temperature:
120℃ max.
- Pressure:
Up to 0.5 bar
- Speed:
Up to 10 m/s
- End play/axial float allowance:
±0.1mm

Sizes
16mm to 100mm
0.75” to 4”

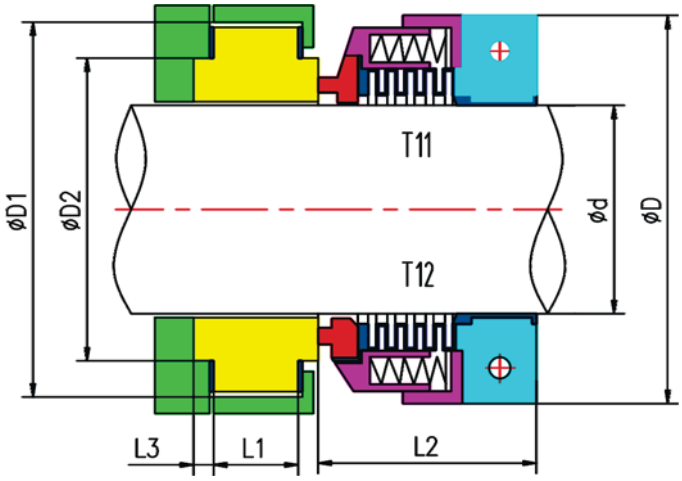

Materials Combination

- Face: PTFE glassfibre, Carbon, SiC, TC
- Seat: Ceramic, SiC, TC
- Bellow: PTFE
- Spring: SS316, hastelloy C
- Metal parts: SS304, Ss316

	d	D	D1	D2	L1	L2	L3
T11,T12-16	16	54	48	36.51	8	31	4.8
T11,T12-18	18	54	48	36.51	8	31	4.8
T11,T12-20	20	57	51	39.69	8	31	4.8
T11,T12-22	22	57	51	39.69	8	31	4.8
T11,T12-24	24	61	54	42.86	8	33	4.8
T11,T12-25	25	61	54	42.86	8	33	4.8
T11,T12-28	28	67	65	50.80	11	36	8.0
T11,T12-30	30	70	68	53.98	11	37	8.0
T11,T12-32	32	70	68	53.98	11	37	8.0
T11,T12-33	33	73	71	57.15	11	38	8.0
T11,T12-35	35	73	71	57.15	11	38	8.0
T11,T12-38	38	76	78	63.50	11	38	8.0
T11,T12-40	40	80	81	66.68	11	40	8.0
T11,T12-43	43	83	84	69.85	11	40	8.0
T11,T12-45	45	83	84	69.85	11	40	8.0
T11,T12-48	48	89	97	79.38	14.3	43	9.5
T11,T12-50	50	89	97	79.38	14.3	43	9.5
T11,T12-53	53	103	100	82.55	14.3	53	9.5
T11,T12-55	55	107	103	85.73	14.3	53	9.5
T11,T12-58	58	110	106	88.90	14.3	53	9.5
T11,T12-60	60	110	106	88.90	14.3	53	9.5
T11,T12-63	63	113	110	92.08	14.3	53	9.5
T11,T12-65	65	116	113	95.25	14.3	53	9.5
T11,T12-68	68	118	116	98.43	14.3	53	9.5
T11,T12-70	70	118	116	98.43	14.3	53	9.5
T11,T12-75	75	126	121	103.19	14.3	53	9.5
T11,T12-80	80	150	132	114.30	14.3	73	9.5
T11,T12-85	85	156	138	120.65	14.3	73	9.5
T11,T12-90	90	163	144	127.00	14.3	73	9.5
T11,T12-95	95	163	144	127.00	14.3	73	9.5
T11,T12-100	100	169	151	133.35	14.3	73	9.5

	d	D	D1	D2	L1	L2	L3
T11,T12-0.75"	19.0	54	48	36.51	8	31	4.8
T11,T12-0.875"	22.2	57	51	39.69	8	31	4.8
T11,T12-1"	25.4	61	54	42.86	8	33	4.8
T11,T12-1.125"	28.5	67	65	50.86	11	36	8.0
T11,T12-1.25"	31.7	70	68	53.98	11	37	8.0
T11,T12-1.375"	34.9	73	71	57.15	11	38	8.0
T11,T12-1.5"	38.1	76	78	63.50	11	38	8.0
T11,T12-1.625"	41.2	80	81	66.68	11	40	8.0
T11,T12-1.75"	44.4	83	84	69.85	11	40	8.0
T11,T12-1.875"	47.6	86	87	73.03	11	43	8.0
T11,T12-2"	50.8	89	97	79.38	14.3	43	9.5
T11,T12-2.125"	53.9	103	100	82.55	14.3	53	9.5
T11,T12-2.25"	57.1	107	103	85.73	14.3	53	9.5
T11,T12-2.375"	60.3	110	106	88.90	14.3	53	9.5
T11,T12-2.5"	63.5	113	110	92.08	14.3	53	9.5
T11,T12-2.625"	66.6	116	113	95.25	14.3	53	9.5
T11,T12-2.75"	69.8	118	116	98.43	14.3	53	9.5
T11,T12-2.875"	73.0	122	117	100.01	14.3	53	9.5
T11,T12-3"	76.2	126	121	103.19	14.3	53	9.5
T11,T12-3.25"	82.5	150	132	114.30	14.3	73	9.5
T11,T12-3.5"	88.9	156	138	120.65	14.3	73	9.5
T11,T12-3.75"	95.2	163	144	127.00	14.3	73	9.5
T11,T12-4"	101.6	169	151	133.35	14.3	73	9.5

T91

Performance Capabilities

- Temperature:
120℃ max.
- Pressure:
Up to 0.5 bar
- Speed:
Up to 10 m/s
- End play/axial float allowance:
±0.1mm

Sizes
25mm to 65mm
1″ to 2 3/8″

Materials Combination

- Face: PTFE glassfibre, Carbon, SiC, TC
- Seat: Ceramic, SiC, TC
- Bellow: PTFE
- Spring: SS316, hastelloy C
- Metal parts: SS304, Ss316

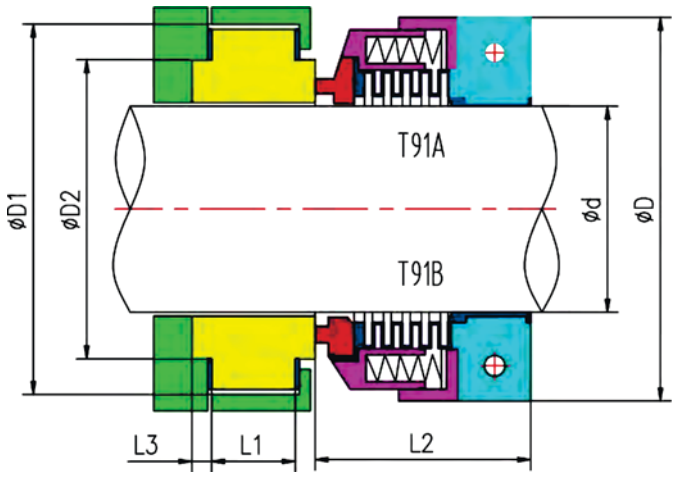

	d	D	D1	D2	L1	L2	L3
T91-1"	25.4	60	54	42.86	8	45	4.8
T91-1 1/8"	28.6	67	60	46.03	11	45	8.0
T91-1 1/4"	31.75	69	65	50.8	11	45	8.0
T91-1 3/8"	34.93	72	68	53.98	11	45	8.0
T91-1 1/2"	38.1	76	71	57.15	11	45	8.0
T91-1 5/8"	41.28	80	78	63.5	11	45	8.0
T91-1 3/4"	44.45	84	81	66.68	11	46	8.0
T91-1 7/8"	47.63	86	84	69.85	11	46	8.0
T91-2"	50.8	90	87	73.03	14.3	46	9.5
T91-2 1/8"	53.98	95	97	79.38	14.3	46	9.5
T91-2 1/4"	57.15	98	100	82.55	14.3	46	9.5
T91-2 3/8"	60.3	100	103	85.73	14.3	46	9.5

	d	D	D1	D2	L1	L2	L3
T91-25	25	60	60	47	11	45	8.0
T91-30	30	67	67	53	11	45	8.0
T91-32	32	69	64	50.7	11	45	8.0
T91-35	35	72	70	57	11	45	8.0
T91-40	40	78	76	62	11	45	8.0
T91-45	45	84	82	67	11	46	8.0
T91-50	50	88	86	72	11	46	8.0
T91-55	55	95	90	77	11	46	8.0
T91-60	60	100	95	82	11	46	8.0
T91-65	65	105	100	87	11	46	8.0

S11

Performance Capabilities

- Temperature：-30℃ to 250℃ dependent on the elastomer
- Pressure：Up to 75mm/3.0" 21 bar g/300 psig max.
  75mm/3.0" and over 13 bar g/200 psig max.
- Speed：Up to 25 m/s
- End play/axial float allowance：0.13mm/0.005"
- Run out/out of squareness：0.05mm/0.002"

Materials Combination

- Face: Carbon, SiC, TC
- Seat: SiC, TC
- O-rings: NBR, EPDM, VITON, Aflas, FEP, Kalrez, Chemraz etc.
- Spring: SS316, hastelloy C
- Metal parts: Ss316

Sizes
24mm to 140mm
1" to 5.5"

S 15

Performance Capabilities

- Temperature：Up to 120℃, dependent on the elastomer
- Pressure：Up to 15 bar g/215 psig max.
- Speed：Up to 20 m/s
- End play/axial float allowance：0.13mm/0.005"
- Run out/out of squareness：0.05mm/0.002"

Materials Combination

- Face: Carbon, SiC, TC
- Seat: SiC, TC
- O-rings: NBR, EPDM, VITON, Aflas, FEP, Kalrez, Chemraz etc.
- Spring: SS316, hastelloy C
- Metal parts: Ss316

Sizes
30mm, 40mm, 50mm, 60mm,
80mm, 90mm, 100mm

S21

Performance Capabilities

- Temperature:
-40℃ to 220℃, dependent on the elastomer
- Pressure:
Up to 25 bar
- Speed:
Up to 25 m/s
- End play/axial float allowance:
±1.0mm

Sizes
25mm to 100mm
1" to 4

Materials Combination

- Face: Carbon, SiC, TC
- Seat: SiC, TC
- O-rings: NBR, EPDM, VITON, Aflas, FEP, Kalrez, Chemraz etc.
- Spring: SS316, hastelloy C
- Metal parts: Ss316

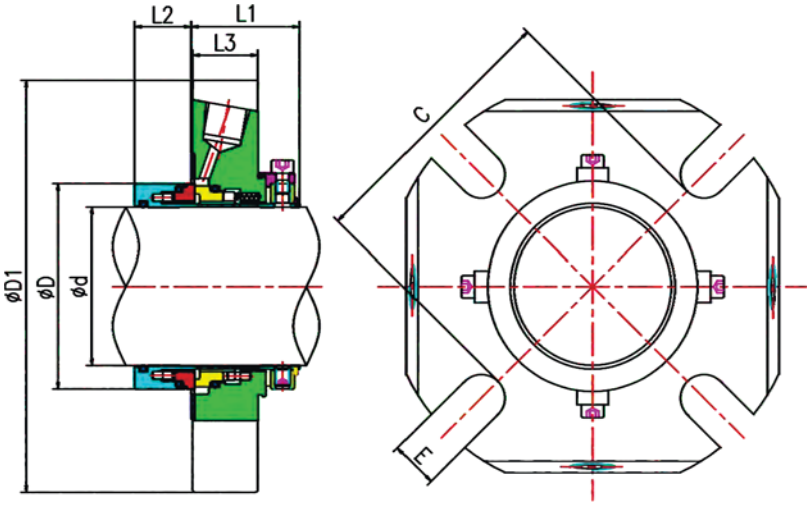

	d	D	D1	L1	L2	L3	C	E
S21-25	25	43	105	42.4	24.6	25.4	62	13.2
S21-28	28	46	105	42.4	24.6	25.4	62	13.2
S21-30	30	48	105	42.4	24.6	25.4	65	13.2
S21-32	32	49.8	108	42.4	24.6	25.4	67	13.2
S21-33	33	49.8	108	42.4	24.6	25.4	67	13.2
S21-35	35	53	113	42.4	24.6	25.4	70	13.2
S21-38	38	56	123	42.4	24.6	25.4	75	13.2
S21-40	40	58	123	42.4	24.6	25.4	75	14.2
S21-42	42	60.5	133	42.4	24.6	25.4	80	14.2
S21-43	43	60.5	133	42.4	24.6	25.4	80	14.2
S21-45	45	62.5	138	42.4	24.6	25.4	81	14.2
S21-48	48	65.6	138	42.4	24.6	25.4	84	14.2
S21-50	50	68	148	42.4	24.6	25.4	87	14.2
S21-53	53	72	148	42.4	24.6	25.4	90	18
S21-55	55	73	148	42.4	24.6	25.4	90	18
S21-60	60	78	157	42.4	24.6	25.4	102	18
S21-65	65	84.8	163	42.4	24.6	25.4	109	18
S21-70	70	93	178	42.4	24.6	25.4	118	18
S21-75	75	100	190	57.4	26.6	28	129	18
S21-80	80	106	195	57.4	26.6	28	135	18
S21-85	85	110	198	57.4	26.6	28	139	22
S21-90	90	116	205	57.4	26.6	28	145	22
S21-95	95	119	208	57.4	26.6	28	148	22
S21-100	100	125	218	57.4	26.6	28	154	22

	d	D	D1	L1	L2	L3	C	E
S21-1"	1	1.693	4.134	1.67	0.969	1	2.44	0.52
S21-1.125"	1.125	1.811	4.134	1.67	0.969	1	2.44	0.52
S21-1.25"	1.25	1.96	4.33	1.67	0.969	1	2.64	0.52
S21-1.375"	1.375	2.086	4.449	1.67	0.969	1	2.75	0.52
S21-1.5"	1.5	2.2	4.842	1.67	0.969	1	2.95	0.52
S21-1.625"	1.625	2.34	4.842	1.67	0.969	1	3.03	0.599
S21-1.75"	1.75	2.46	5.433	1.67	0.969	1	3.19	0.599
S21-1.875"	1.875	2.582	5.433	1.67	0.969	1	3.19	0.599
S21-2"	2	2.677	5.827	1.67	0.969	1	3.43	0.599
S21-2.125"	2.125	2.834	5.827	1.67	0.969	1	3.82	0.709
S21-2.25"	2.25	2.96	6.181	1.67	0.969	1	3.94	0.709
S21-2.375"	2.375	3.07	6.181	1.67	0.969	1	4.02	0.709
S21-2.5"	2.5	3.212	6.417	1.67	0.969	1	4.17	0.709
S21-2.625"	2.625	3.338	6.417	1.67	0.969	1	4.29	0.709
S21-2.75"	2.75	3.66	7.008	1.67	0.969	1	4.65	0.709
S21-2.875"	2.875	3.811	7.283	2.26	1.047	1	4.96	0.709
S21-3"	3	3.937	7.48	2.26	1.047	1.102	5.08	0.709
S21-3.125"	3.125	4.063	7.677	2.26	1.047	1.102	5.2	0.709
S21-3.25"	3.25	41.89	7.677	2.26	1.047	1.102	5.32	0.709
S21-3.375"	3.375	4.311	7.795	2.26	1.047	1.102	5.47	0.866
S21-3.5"	3.5	4.437	7.795	2.26	1.047	1.102	5.59	0.866
S21-3.625"	3.625	4.563	8.071	2.26	1.047	1.102	5.71	0.866
S21-3.75"	3.75	4.689	8.189	2.26	1.047	1.102	5.83	0.866
S21-4"	4	4.937	8.583	2.26	1.047	1.102	6.06	0.866

S22

Performance Capabilities

- Temperature:
-40℃ to 220℃, dependent on the elastomer
- Pressure:
Up to 25 bar
- Speed:
Up to 25 m/s
- End play/axial float allowance:
±1.0mm

Sizes
25mm to 75mm
1” to 2.625”

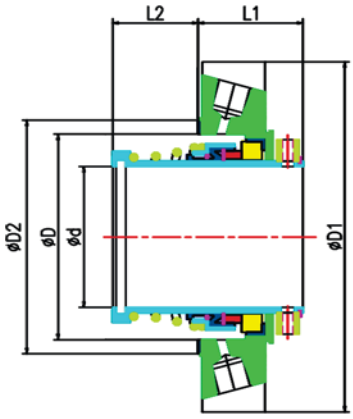

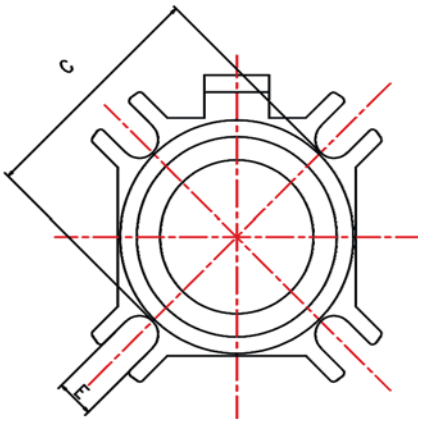

Materials Combination

- Face: Carbon, SiC, TC
- Seat: SiC, TC
- O-rings: NBR, EPDM, VITON, Aflas, FEP, Kalrez, Chemraz etc.
- Spring: SS316, hastelloy C
- Metal parts: Ss316

	d	D min	D max	D1	D2	C	E	L1	L2
S22-25	25	41.5	51	105	60	62	13.2	41	24.5
S22-28	28	44.5	52	105	60	62	13.2	41.5	26.5
S22-30	30	45.5	56	105	63	67	13.2	41.5	26.5
S22-33	33	48	57	110	65	67	13.2	42	27.5
S22-35	35	50.8	61.5	107	68	70	13.2	44	28.5
S22-38	38	54.5	66	123	73	75	14.7	44	28.5
S22-40	40	57.5	68	123	75	77	14.7	44.5	31
S22-43	43	59.5	70.5	133	78	80	14.7	44.5	32
S22-45	45	63	73	130	79	82	14.2	44.5	32
S22-48	48	65	75	130	82	84	14.2	45	33
S22-50	50	58	78	148	85	87	14.7	47	33.5
S22-53	53	70	87	148	95	97	17.5	47	34.5
S22-55	55	73	83	148	90	92	17.5	47	36.5
S22-60	60	79	91	157	100	102	17.5	47	38.5
S22-65	65	85.7	98.5	162	108	110	17.5	48.5	39.5
S22-70	70	94	108	178	116	118	17.5	48.5	43.5
S22-75	75	98.4	118	190	125	127	17.5	49	44.5
S22-1"	1	1.634	2	4.134	2.362	2.44	0.52	1.614	0.965
S22-1.125"	1.125	1.75	2.05	4.134	2.362	2.441	0.52	1.634	1.043
S22-1.25"	1.25	1.89	2.25	4.331	2.559	2.638	0.52	1.654	1.083
S22-1.375"	1.375	2	2.42	4.213	2.677	2.756	0.52	1.732	1.122
S22-1.5"	1.5	2.146	2.625	4.843	2.874	2.95	0.579	1.732	1.122
S22-1.75"	1.75	2.48	2.812	5.118	3.11	3.23	0.559	1.752	1.26
S22-1.875"	1.875	2.559	2.94	5.118	3.228	3.207	0.559	1.772	1.299
S22-2"	2	2.677	3.19	5.827	3.346	3.43	0.579	1.85	1.319
S22-2.125"	2.125	2.875	3.437	5.512	3.74	3.82	0.689	1.85	1.437
S22-2.25"	2.25	2.992	3.56	6.181	3.78	3.858	0.689	1.85	1.437
S22-2.375"	2.375	3.11	3.59	6.181	3.937	4.02	0.689	1.85	1.516
S22-2.5"	2.5	3.287	3.8	6.693	4.173	4.252	0.689	1.909	1.555
S22-2.625"	2.625	3.374	3.937	6.378	4.252	4.331	0.689	1.909	1.555

S51

Performance Capabilities

- Temperature:
-40℃ to 220℃, dependent on the elastomer
- Pressure:
Up to 28 bar
- Speed:
Up to 35 m/s
- End play/axial float allowance:
±1.0mm

Sizes
24mm to 100mm
1" to 4"

Materials Combination

- Face: Carbon, SiC, TC
- Seat: SiC, TC
- O-rings: NBR, EPDM, VITON, Aflas, FEP, Kalrez, Chemraz etc.
- Spring: SS316, hastelloy C
- Metal parts: Ss316

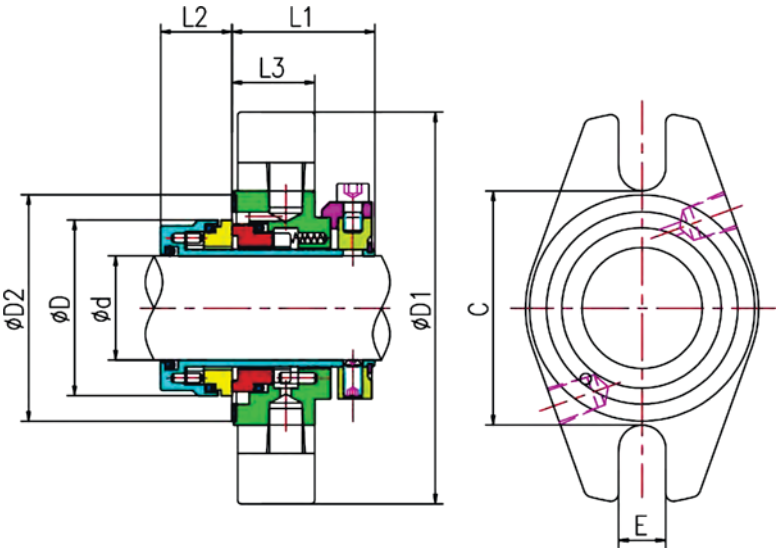

	d	C	D	D1	D2	E	L1	L2	L3
S51-24	24	62	43.5	104	60	12.5	38	19	22
S51-25	25	62	43.5	104	60	12.5	38	19	22
S51-28	28	62	46.5	104	60	12.5	38	19	22
S51-30	30	65	48.5	104	63	12.5	38	19	22
S51-32	32	67	50	104	65	12.5	38	19	22
S51-33	33	67	50	104	65	12.5	38	19	22
S51-35	35	70	53.5	115	68	12.5	38	19	22
S51-38	38	75	56.5	125	73	14.7	38	19	22
S51-40	40	75	58.5	125	73	14.7	38	19	22
S51-43	43	80	61.5	133	78	14.7	38	19	22
S51-45	45	81	63.5	140	79	14.7	38	19	22
S51-48	48	84	66.5	140	82	14.7	38	19	22
S51-50	50	87	68.5	140	85	14.7	38	19	22
S51-53	53	90	71.5	150	88	17.5	38	19	22
S51-55	55	92	73.5	150	90	17.5	38	19	22
S51-60	60	100	78.5	160	98	17.5	38	19	22
S51-65	65	105	83.5	165	103	17.5	38	19	22
S51-70	70	120	88.5	180	118	17.5	38	19	22
S51-75	75	125	100	190	123	17.5	36	26	23
S51-80	80	130	105	190	128	17.5	36	26	23
S51-85	85	135	110	220	133	20.5	36	26	23
S51-90	90	140	115	220	138	20.5	36	26	23
S51-95	95	145	120	220	143	20.5	36	26	23
S51-100	100	150	125	220	148	20.5	36	26	23

	d	C	D	D1	D2	E	L1	L2	L3
S51-1"	1	2.441	1.713	4.094	2.362	0.492	1.496	0.748	0.866
S51-1.125"	1.125	2.441	1.831	4.094	2.362	0.492	1.496	0.748	0.866
S51-1.25"	1.25	2.638	1.988	4.094	2.559	0.492	1.496	0.748	0.866
S51-1.375"	1.375	2.756	2.106	4.2528	2.677	0.492	1.496	0.748	0.866
S51-1.5"	1.5	2.953	2.224	4.921	2.874	0.579	1.496	0.748	0.866
S51-1.625"	1.625	3.15	2.382	5.236	3.071	0.579	1.496	0.748	0.866
S51-1.75"	1.75	3.189	2.5	5.512	3.11	0.579	1.496	0.748	0.866
S51-1.875"	1.875	3.307	2.618	5.512	3.228	0.579	1.496	0.748	0.866
S51-2"	2	3.425	2.697	5.512	3.346	0.579	1.496	0.748	0.866
S51-2.125"	2.125	3.543	2.815	5.906	3.465	0.689	1.496	0.748	0.866
S51-2.25"	2.25	3.74	3.012	6.102	3.661	0.689	1.496	0.748	0.866
S51-2.375"	2.375	3.937	3.091	6.299	3.858	0.689	1.496	0.748	0.866
S51-2.5"	2.5	4.055	3.209	6.469	3.975	0.689	1.496	0.748	0.866
S51-2.625"	2.625	4.331	3.406	6.693	4.252	0.689	1.496	0.748	0.866
S51-2.75"	2.75	4.724	3.484	7.087	4.648	0.689	1.496	0.748	0.866
S51-2.875"	2.875	4.843	3.858	7.48	4.764	0.689	1.417	1.024	0.906
S51-3"	3	4.921	3.937	7.48	4.843	0.689	1.417	1.024	0.906
S51-3.125"	3.125	5.118	4.135	7.48	5.039	0.689	1.417	1.024	0.906
S51-3.25"	3.25	5.236	4.252	8.661	5.157	0.846	1.417	1.024	0.906
S51-3.375"	3.375	5.315	4.331	8.661	5.236	0.846	1.417	1.024	0.906
S51-3.5"	3.5	5.512	4.528	8.661	5.433	0.846	1.417	1.024	0.906
S51-3.625"	3.625	5.591	4.606	8.661	5.512	0.846	1.417	1.024	0.906
S51-3.75"	3.75	5.709	4.724	8.661	5.63	0.846	1.417	1.024	0.906
S51-3.875"	3.875	5.906	4.921	8.661	5.827	0.846	1.417	1.024	0.906
S51-4"	4	5.906	4.921	8.661	5.827	0.846	1.417	1.024	0.906

D11

Performance Capabilities

- Temperature：-20℃ to 200℃, dependent on the elastomer
- Pressure：Up to 15 bar
- Speed：Up to 20 m/s
- End play/axial float allowance：±1.0mm

Materials Combination

- Face: Carbon, SiC, TC
- Seat: SiC, TC
- O-rings: NBR, EPDM, VITON, Aflas, FEP, Kalrez, Chemraz etc.
- Spring: SS316, hastelloy C
- Metal parts: Ss316

Sizes
30mm, 40mm, 50mm, 60mm,
80mm, 90mm, 100mm

D13

Performance Capabilities

- Temperature：-20℃ to 200℃, dependent on the elastomer
- Pressure：Up to 15 bar
- Speed：Up to 20 m/s
- End play/axial float allowance：±1.0mm

Materials Combination

- Face: Carbon, SiC, TC
- Seat: SiC, TC
- O-rings: NBR, EPDM, VITON, Aflas, FEP, Kalrez, Chemraz etc.
- Spring: SS316, hastelloy C
- Metal parts: Ss316

Sizes
45mm, 58mm, 77mm, 108mm

D14

Performance Capabilities

- Temperature：-20℃ to 200℃, dependent on the elastomer
- Pressure：Up to 15 bar
- Speed：Up to 15 m/s
- End play/axial float allowance ± 2.0mm

Materials Combination

- Face: Carbon, SiC, TC
- Seat: SiC, TC
- O-rings: NBR, EPDM, VITON, Aflas, FEP, Kalrez, Chemraz etc.
- Spring: SS316, hastelloy C
- Metal parts: Ss316

Sizes
30mm, 50mm, 55mm, 60mm, 65mm,70mm,
85mm, 95mm, 110mm, 130mm, 150mm

D21

Performance Capabilities

- Temperature:
-20℃ to 250℃, dependent on the elastomer
- Pressure:
Up to 25 bar
- Speed:
Up to 25 m/s
- End play/axial float allowance:
±1.0mm

Sizes
25mm to 100mm
1” to 4”

Materials Combination

- Face: Carbon, SiC, TC
- Seat: SiC, TC
- O-rings: NBR, EPDM, VITON, Aflas, FEP, Kalrez, Chemraz etc.
- Spring: SS316, hastelloy C
- Metal parts: Ss316

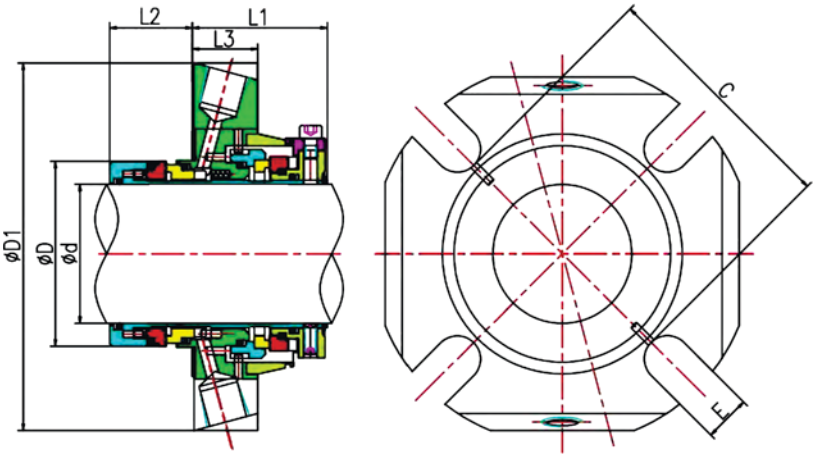

	d	D	D1	L1	L2	L3	C	E
D21-25	25	43	105	53.4	33.1	25.4	62	13.2
D21-28	28	46	105	53.4	33.1	25.4	62	13.2
D21-30	30	48	105	53.4	33.1	25.4	65	13.2
D21-32	32	49.8	108	53.4	33.1	25.4	67	13.2
D21-33	33	49.8	108	53.4	33.1	25.4	67	13.2
D21-35	35	53	113	53.4	33.1	25.4	70	13.2
D21-38	38	56	123	53.4	33.1	25.4	75	14.2
D21-40	40	58	123	53.4	33.1	25.4	75	14.2
D21-42	42	60.5	133	53.4	33.1	25.4	80	14.2
D21-43	43	60.5	133	53.4	33.1	25.4	80	14.2
D21-45	45	62.5	138	53.4	33.1	25.4	81	14.2
D21-48	48	65.6	138	53.4	33.1	25.4	84	14.2
D21-50	50	68	148	53.4	33.1	25.4	87	14.2
D21-53	53	72	148	53.4	33.1	25.4	97	18
D21-55	55	73	148	53.4	33.1	25.4	90	18
D21-60	60	78	157	53.4	33.1	25.4	102	18
D21-65	65	84.8	163	53.4	33.1	25.4	109	18
D21-70	70	93	178	53.4	33.1	25.4	118	18
D21-75	75	100	190	63.9	44.1	28	129	18
D21-80	80	106.4	195	63.9	44.1	28	135	18
D21-85	85	109.5	198	63.9	44.1	28	139	22
D21-90	90	115.9	205	63.9	44.1	28	145	22
D21-95	95	119.1	208	63.9	44.1	28	148	22
D21-100	100	125.4	218	63.9	44.1	28	154	22

	d	D	D1	L1	L2	L3	C	E
D21-1"	1	1.693	4.134	2.102	1.303	1	2.44	0.52
D21-1.125"	1.125	1.811	4.134	2.102	1.303	1	2.44	0.52
D21-1.25"	1.25	1.96	4.33	2.102	1.303	1	2.64	0.52
D21-1.375"	1.375	2.086	4.449	2.102	1.303	1	2.75	0.52
D21-1.5"	1.5	2.2	4.842	2.102	1.303	1	2.95	0.52
D21-1.625"	1.625	2.34	4.842	2.102	1.303	1	3.03	0.599
D21-1.75"	1.75	2.46	5.433	2.102	1.303	1	3.19	0.599
D21-1.875"	1.875	2.582	5.433	2.102	1.303	1	3.19	0.599
D21-2"	2	2.677	5.827	2.102	1.303	1	3.43	0.599
D21-2.125"	2.125	2.834	5.827	2.102	1.303	1	3.82	0.709
D21-2.25"	2.25	2.96	6.181	2.102	1.303	1	3.94	0.709
D21-2.375"	2.375	3.07	6.181	2.102	1.303	1	4.02	0.709
D21-2.5"	2.5	3.212	6.417	2.102	1.303	1	4.17	0.709
D21-2.625"	2.625	3.338	6.417	2.102	1.303	1	4.29	0.709
D21-2.75"	2.75	3.66	7.008	2.102	1.303	1	4.65	0.709
D21-2.875"	2.875	3.811	7.283	2.102	1.303	1	4.96	0.709
D21-3"	3	3.937	7.48	2.516	1.736	1.102	5.079	0.709
D21-3.125"	3.125	4.063	7.677	2.516	1.736	1.102	5.197	0.709
D21-3.25"	3.25	4.189	7.677	2.516	1.736	1.102	5.315	0.709
D21-3.375"	3.375	4.311	7.795	2.516	1.736	1.102	5.472	0.866
D21-3.5"	3.5	4.437	7.795	2.516	1.736	1.102	5.591	0.866
D21-3.625"	3.625	4.563	8.071	2.516	1.736	1.102	5.709	0.866
D21-3.75"	3.75	4.689	8.189	2.516	1.736	1.102	5.827	0.866
D21-4"	4	4.937	8.583	2.516	1.736	1.102	6.063	0.866

D51

Performance Capabilities

- Temperature:
-40℃ to 250℃, dependent on the elastomer
- Pressure:
Up to 28 bar
- Speed:
Up to 35 m/s
- End play/axial float allowance:
±1.0mm

Sizes
24mm to 100mm
1" to 4"

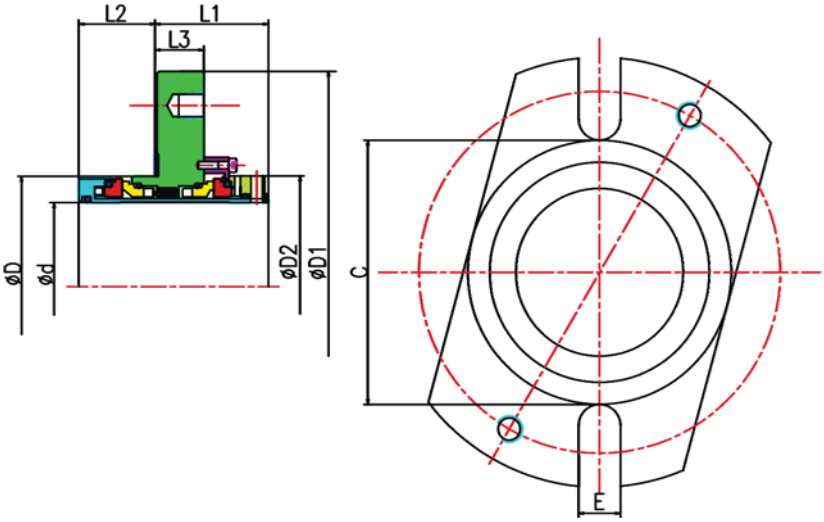

Materials Combination

- Face: Carbon, SiC, TC
- Seat: SiC, TC
- rings: NBR, EPDM, VITON, Aflas, FEP, Kalrez, Chemraz etc.
- Spring: SS316, hastelloy C
- Metal parts: Ss316

	d	C	D	D1	D2	E	L	L2	L3
D51-24	24	60	44.7	105	52	12.5	50	35	24
D51-25	25	60	44.7	105	52	12.5	50	35	24
D51-28	28	60	47.7	105	55	12.5	50	35	24
D51-30	30	60	49.7	105	57	12.5	50	35	24
D51-32	32	60	50.9	105	60	12.5	50	35	24
D51-33	33	60	50.9	105	60	12.5	50	35	24
D51-35	35	67	54.7	115	62	12.5	50	35	24
D51-38	38	75	57.7	130	65	14.7	50	35	24
D51-40	40	75	59.7	130	67	14.7	50	35	24
D51-43	43	82	62.7	140	70	14.7	50	35	24
D51-45	45	82	64.7	140	72	14.7	50	35	24
D51-48	48	82	67.7	140	75	14.7	50	35	24
D51-50	50	82	69.7	140	77	14.7	50	35	24
D51-53	53	92	72.7	150	80	17.5	50	35	24
D51-55	55	92	74.7	150	82	17.5	50	35	24
D51-60	60	100	79.7	160	87	17.5	50	35	24
D51-65	65	100	84.7	160	92	17.5	50	35	24
D51-70	70	112	89.7	180	97	17.5	50	35	24
D51-75	75	125	102.8	190	108	17.5	54	39	25
D51-80	80	130	107.8	190	113	17.5	54	39	25
D51-85	85	135	112.8	220	118	21.5	54	39	25
D51-90	90	140	117.8	220	123	21.5	54	39	25
D51-95	95	145	122.8	220	128	21.5	54	39	25
D51-100	100	150	127.8	220	133	21.5	54	39	25

	d	C	D	D1	D2	E	L1	L2	L3
D51-1"	1	2.382	1.76	4.134	1.85	0.492	2.126	1.387	0.945
D51-1.125"	1	2.362	1.878	4.134	1.969	0.492	2.126	1.387	0.945
D51-1.25"	1	2.362	2.004	4.134	2.126	0.492	2.126	1.387	0.945
D51-1.375"	1	2.638	2.154	4.528	2.244	0.492	2.126	1.387	0.945
D51-1.5"	2	2.953	2.272	5.118	2.362	0.579	2.126	1.387	0.945
D51-1.625"	2	3.228	2.429	5.512	2.52	0.579	2.126	1.387	0.945
D51-1.75"	2	3.228	2.547	5.512	2.638	0.579	2.126	1.387	0.945
D51-1.875"	2	3.228	2.665	5.512	2.756	0.579	2.126	1.387	0.945
D51-2"	2	3.228	2.744	5.512	2.835	0.579	2.126	1.387	0.945
D51-2.125"	2	3.622	2.862	5.906	2.953	0.689	2.126	1.387	0.945
D51-2.25"	2	3.622	3.02	5.906	3.11	0.689	2.126	1.387	0.945
D51-2.375"	2	3.937	3.138	6.299	3.228	0.689	2.126	1.387	0.945
D51-2.5"	2	3.937	3.256	6.299	3.346	0.689	2.126	1.387	0.945
D51-2.625"	3	4.409	3.413	7.087	3.504	0.689	2.126	1.387	0.945
D51-2.75"	3	4.409	3.531	7.087	3.622	0.689	2.126	1.387	0.945
D51-2.875"	3	4.843	3.969	7.48	3.976	0.689	2.126	1.387	0.945
D51-3"	3	4.921	4.047	7.48	4.055	0.689	2.283	1.535	0.984
D51-3.125"	3	5.118	4.244	7.48	4.252	0.689	2.283	1.535	0.984
D51-3.25"	3	5.236	4.362	7.48	4.37	0.689	2.283	1.535	0.984
D51-3.375"	3	5.315	4.441	8.661	4.449	0.846	2.283	1.535	0.984
D51-3.5"	4	5.512	4.638	8.661	4.646	0.846	2.283	1.535	0.984
D51-3.625"	4	5.591	4.717	8.661	4.724	0.846	2.283	1.535	0.984
D51-3.75"	4	5.709	4.835	8.661	4.843	0.846	2.283	1.535	0.984
D51-3.875"	4	5.906	5.031	8.661	5.039	0.846	2.283	1.535	0.984
D51-4"	4	5.906	5.031	8.661	5.039	0.846	2.283	1.535	0.984

D53

Performance Capabilities

- Temperature:
-40℃ to 250℃, dependent on the elastomer
- Pressure:
Up to 28 bar
- Speed:
Up to 25 m/s
- End play/axial float allowance:
±1.0mm

Sizes
50mm to 200mm
2" to 7.875"

Materials Combination

- Face: Carbon, SiC, TC
- Seat: SiC, TC
- rings: NBR, EPDM, VITON, Aflas, FEP, Kalrez, Chemraz etc.
- Spring: SS316, hastelloy C
- Metal parts: Ss316

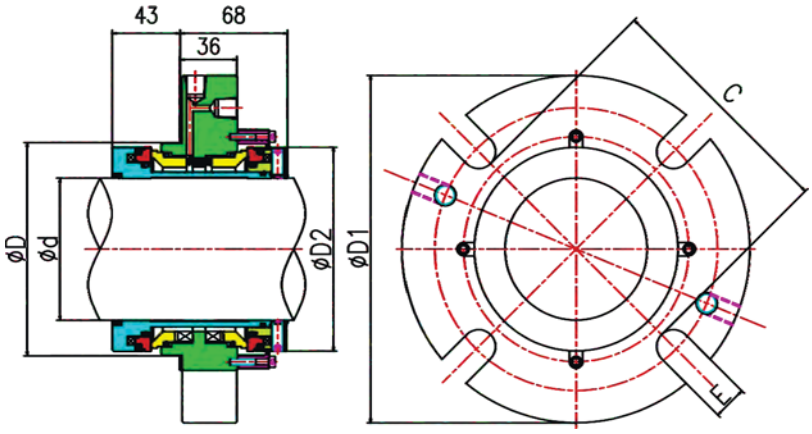

	d	C	D	D1	D2	E
D53-50	50	113	95	180	89	17.5
D53-55	55	118	100	185	94	17.5
D53-60	60	123	105	190	99	17.5
D53-65	65	128	110	195	104	17.5
D53-70	70	133	115	200	109	17.5
D53-75	75	138	120	205	114	17.5
D53-80	80	143	125	210	119	17.5
D53-85	85	148	130	215	124	21.5
D53-90	90	153	135	220	129	21.5
D53-95	95	158	140	225	134	21.5
D53-100	100	163	145	230	139	21.5
D53-105	105	168	150	235	144	21.5
D53-110	110	173	155	240	149	21.5
D53-115	115	178	160	245	154	21.5
D53-120	120	183	165	250	159	21.5
D53-125	125	188	170	255	164	21.5
D53-130	130	193	175	260	169	21.5
D53-135	135	198	180	265	174	21.5
D53-140	140	203	185	270	179	21.5
D53-145	145	208	190	275	184	21.5
D53-150	150	213	195	280	189	21.5
D53-155	155	218	200	285	194	21.5
D53-160	160	223	205	290	199	21.5
D53-165	165	228	210	295	204	21.5
D53-170	170	233	215	300	209	21.5
D53-175	175	238	220	305	214	21.5
D53-180	180	243	225	310	219	21.5
D53-185	185	248	230	315	224	21.5
D53-190	190	253	235	320	229	21.5
D53-195	195	258	240	325	234	21.5
D53-200	200	263	245	330	239	21.5

	d	C	D	D1	D2	E
D53-2"	2	4.646	3.937	7.283	3.701	0.689
D53-2.125"	2.125	4.646	3.937	7.283	3.701	0.689
D53-2.25"	2.25	4.843	4.134	7.48	3.898	0.689
D53-2.375"	2.375	4.843	4.134	7.48	3.898	0.689
D53-2.5"	2.5	5.039	4.331	7.677	4.094	0.689
D53-2.625"	2.625	5.236	4.528	7.874	4.291	0.689
D53-2.75"	2.75	5.236	4.528	7.874	4.291	0.689
D53-2.875"	2.875	5.433	4.724	8.071	4.488	0.689
D53-3"	3	5.63	4.921	8.268	4.685	0.689
D53-3.125"	3.125	5.63	4.921	8.268	4.685	0.689
D53-3.25"	3.25	5.827	5.118	8.465	4.882	0.846
D53-3.375"	3.375	6.024	5.315	8.661	5.079	0.846
D53-3.5"	3.5	6.024	5.315	8.661	5.079	0.846
D53-3.625"	3.625	6.22	5.512	8.858	5.276	0.846
D53-3.75"	3.75	6.22	5.512	8.858	5.276	0.846
D53-3.875"	3.875	6.417	5.709	9.055	5.472	0.846
D53-4"	4	6.614	5.906	9.252	5.669	0.846
D53-4.25"	4.25	6.811	6.102	9.449	5.866	0.846
D53-4.5"	4.5	7.008	6.299	9.646	6.063	0.846
D53-4.75"	4.75	7.402	6.693	10.009	6.457	0.846
D53-5"	5	7.598	6.89	10.236	6.654	0.846
D53-5.25"	5.25	7.795	7.087	10.433	6.85	0.846
D53-5.5"	5.5	7.992	7.283	10.63	7.047	0.846
D53-5.75"	5.75	8.386	7.677	11.024	7.441	0.846
D53-6"	6	8.583	7.874	11.22	7.638	0.846
D53-6.25"	6.25	8.78	8.071	11.417	7.835	0.846
D53-6.5"	6.5	8.976	8.268	11.614	8.031	0.846
D53-6.75"	6.75	9.37	8.661	12.008	8.245	0.846
D53-7"	7	9.567	8.858	12.205	8.622	0.846
D53-7.25"	7.25	9.764	9.055	12.402	8.819	0.846
D53-7.5"	7.5	10.157	9.449	12.795	9.213	0.846

TS 43

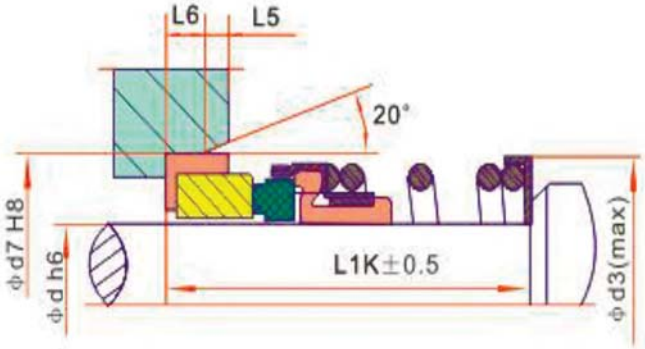

OPERATING	Pressure	Speed	Temperature
LIMITS	1.0MPa	10m/s	-30C°-200C°

- Stationary Ring (Ceramic/SIC/TC)
- Rotary Ring (Carbon/ SIC/TC)
- Secondary Seal (NBR/ EPDM/VITON)
- Spring & Other Parts (S.S/SUS304/SUS316)

Model	d	d3	d7	L1K	L5	L6
TS43-10	10	20	21	32.5	1.5	4
TS43-12	12	22	23	32.5	1.5	4
TS43-14	14	24	25	35.0	1.5	4
TS43-16	16	26	27	35.0	1.5	4
TS43-18	18	32	33	37.5	2	5
TS43-20	20	34	35	37.5	2	5
TS43-22	22	36	37	37.5	2	5
TS43-24	24	38	39	40.0	2	5
TS43-25	25	39	40	40.0	2	5
TS43-28	28	42	43	42.5	2	5
TS43-30	30	44	45	42.5	2	5
TS43-32	32	46	48	42.5	2	5
TS43-33	33	47	48	42.5	2	5
TS43-35	35	49	50	42.5	2	5
TS43-38	38	54	56	45.0	2	6
TS43-40	40	56	58	45.0	2	6
TS43-43	43	59	61	45.0	2	6
TS43-45	45	61	63	45.0	2	6
TS43-48	48	64	66	45.0	2	6
TS43-50	50	66	70	47.5	2.5	6
TS43-53	53	69	73	47.5	2.5	6
TS43-55	55	71	75	47.5	2.5	6
TS43-58	58	78	78	52.5	2.5	6
TS43-60	60	80	80	52.5	2.5	6
TS43-63	63	83	83	52.5	2.5	6
TS43-65	65	85	85	52.5	2.5	6
TS43-68	68	88	90	52.5	2.5	7
TS43-70	70	90	92	60.0	2.5	7
TS43-75	75	99	97	60.0	2.5	7
TS43-80	80	104	105	60.0	3	7
TS43-85	85	108	110	60.0	3	7
TS43-90	90	114	115	65.0	3	7
TS43-95	95	119	120	65.0	3	7
TS43-100	100	124	125	65.0	3	7

TS 104

OPERATING LIMITS	Pressure	Speed	Temperature
	0.8MPa	5m/s	-30C°-200C°

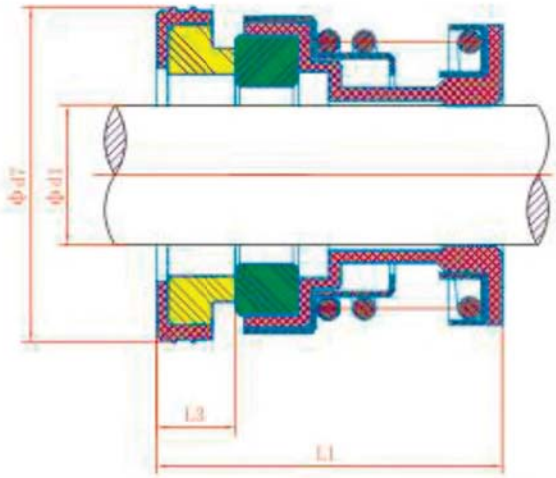

- Stationary Ring (Ceramic/Carbon)
- Rotary Ring (Ceramic)
- Secondary Ring (NBR/VITON)
- Spring and Retainer(S.S/Copper)

Model	d1	d7	L1	L3
TS104-9	9	22	20	5.5
TS104-10	10	22	20	5.5
TS104-11	11	24	20	5.5
TS104-12	12	24	20	5.5
TS104-14	14	26	25	7
TS104-15	15	28	25	7
TS104-16	16	28	25	7
TS104-17	17	34	25	7
TS104-18	18	34	25	7
TS104-19	19	36	25	7
TS104-20	20	36	25	7
TS104-22	22	38	25	7
TS104-25	25	41	37	9
TS104-30	30	46	37	9
TS104-35	35	51	37	9
TS104-40	40	60	40	10.5
TS104-45	45	65	40	10.5

TS108

OPERATING LIMITS

- Pressure -1MPa
- Speed -10m/s
- Temperature -30C°-200C°

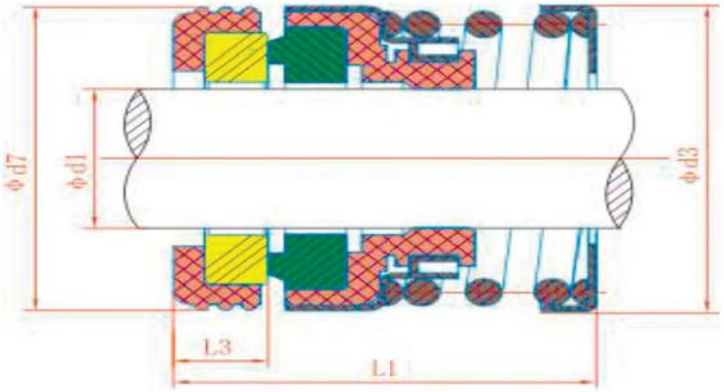

- Stationary Ring (Ceramic/SIC/TC)
- Rotary Ring (Carbon/ SIC/TC)
- Secondary Seal (NBR/ EPDM/VITON)
- Spring & Other Parts (SUS304/SUS316)

Model	d1	d3	d7	L1	L3
TS108-9	9	20	21	20	4.5
TS108-10	10	20	21	20	4.5
TS108-11	11	22	23	20	4.5
TS108-12	12	22	23	20	4.5
TS108-14	14	24.5	25	25	5.5
TS108-15	15	26.5	27	25	5.5
TS108-16	16	26.5	27	25	5.5
TS108-17	17	32	33	25	7.0
TS108-18	18	32	33	25	7.0
TS108-19	19	34	35	25	7.0
TS108-20	20	34	35	25	7.0
TS108-22	22	36	37	28	7.0
TS108-25	25	39	40	32	7.0
TS108-28	28	42	43	35	7.0
TS108-30	30	44	45	35	7.0
TS108-35	35	49	50	37	7.0
TS108-40	40	56	58	40	8.0
TS108-45	45	61	63	40	8.0
TS108-50	50	67	70	45	8.5
TS108-55	55	72	75	45	8.5

TS 155

OPERATING LIMITS	Pressure	Speed	Temperature
	1MPa	10m/s	-30C°-200C°

MODEL	d1	d3	d7	L1	L3
TS155-10	10	20	18.1	20.5	5.5
TS155-11	11	22	20.6	23.5	5.5
TS155-12	12	22	20.6	23.5	5.5
TS155-13	13	25	23.1	28	6
TS155-14	14	25	23.1	28	6
TS155-15	15	29	26.9	30	7
TS155-16	16	29	26.9	30	7
TS155-17	17	29	26.9	30	7
TS155-18	18	33	30.9	32	8
TS155-19	19	33	30.9	33	8
TS155-20	20	33	30.9	33	8
TS155-21	21	38	35.4	33	8
TS155-22	22	38	35.4	33	8
TS155-23	23	38	35.4	35	8
TS155-24	24	38	35.4	35	8
TS155-25	25	40	38.2	35.5	8.5
TS155-28	28	46	43.3	39	9
TS155-29	29	46	43.3	39	9
TS155-30	30	46	43.3	39	9
TS155-32	32	46	43.3	39	9
TS155-33	33	50	53.5	50.5	11.5
TS155-35	35	50	53.5	50.5	11.5
TS155-38	38	60.5	60.5	50.5	11.5
TS155-40	40	60.5	60.5	50.5	11.5

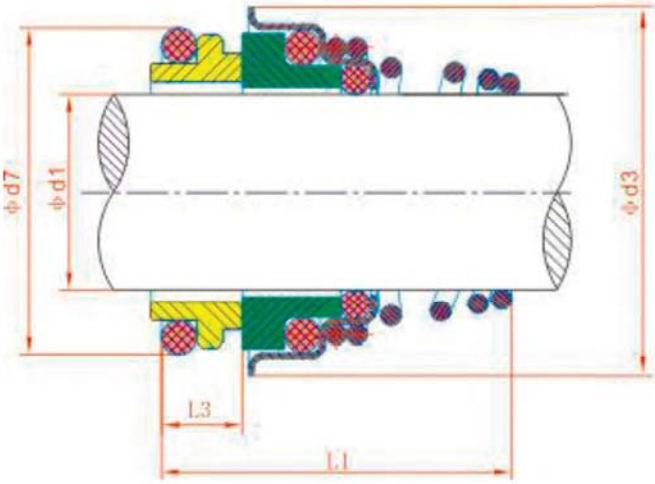

Equivalent to "PAC-SEAL" type17

- Stationary Ring (Carbon/SIC/TC)
- Rotary Ring (Ceramic/ SIC/TC)
- Secondary Seal (NBR/ EPDM/VITON)
- Spring & Other Parts (SUS304/SUS316)

TS 166T

OPERATING LIMITS	Pressure	Speed	Temperature
	1MPa	10m/s	-30C°-200C°

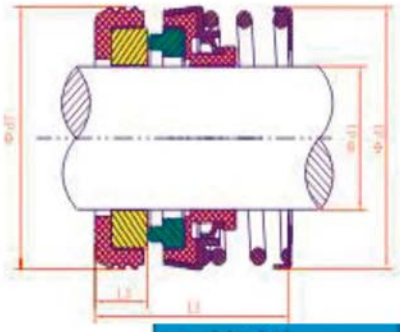

Spring	SUS304/SUS316
Drive ring	SUS304/SUS316
Retainer	SUS304/SUS316
Bellows	NBR/EPDM/VITON
Rotary ring	Carbon/SIC/TC
Stationary Ring	Ceramic/SIC/TC
Cup Gasket	NBR/EPDM/VITON

Model	d1	d3	d7	L1	L3
TS166T-3/8"	9.525	23.292	24.587	34.138	8.738
TS166T-1/2"	12.700	23.292	27.788	34.138	8.738
TS166T-5/8"	15.875	30.099	30.937	35.712	10.312
TS166T-3/4"	19.050	33.071	33.1/34.138	35.712	6.5/10.312
TS166T-7/8"	22.225	36.297	37.287	35.712	10.312
TS166T-1"	25.400	39.421	41.28/40.488	43.307	10.312
TS166T-11/8"	28.575	44.450	47.625	44.907	11.913
TS166T-11/4"	31.750	47.625	50.800	44.907	11.913
TS166T-13/8"	34.925	50.800	53.975	44.907	11.913
TS166T-11/2"	38.100	53.975	57.150	44.907	11.913
TS166T-15/8"	41.275	60.325	60.325	44.907	11.913
TS166T-13/4"	44.450	60.325	63.500	52.934	11.913
TS166T-17/8"	47.625	63.881	66.675	52.934	11.913
TS166T-2"	50.800	66.675	69.850	54.508	13.487
TS166T-12	12	23.3	27.8	34.1	8.7
TS166T-16	16	30.1	30.95	35.7	10.3
TS166T-20	20	36.3	35.7	35.7	10.3
TS166T-22	22	36.3	37.3	35.7	10.3
TS166T-24	24	39.4	40.5	35.7	10.3
TS166T-25	25	39.4	40.5	35.7	10.3
TS166T-28	28	44.4	47.65	45.2	11.9
TS166T-30	30	47.6	50.8	45.2	11.9
TS166T-32	32	47.6	50.8	45.2	11.9
TS166T-35	35	50.8	54	45.2	11.9
TS166T-38	38	54	57.15	45.2	11.9
TS166T-40	40	60.3	60.35	45.2	11.9
TS166T-45	45	66.7	63.5	52.4	11.9
TS166T-48	48	66.7	66.7	52.4	11.9
TS166T-50	50	66.7	69.85	54	13.5

TS 156

OPERATING LIMITS	Pressure	Speed	Temperature
	0.5MPa	10m/s	-30C°-200C°

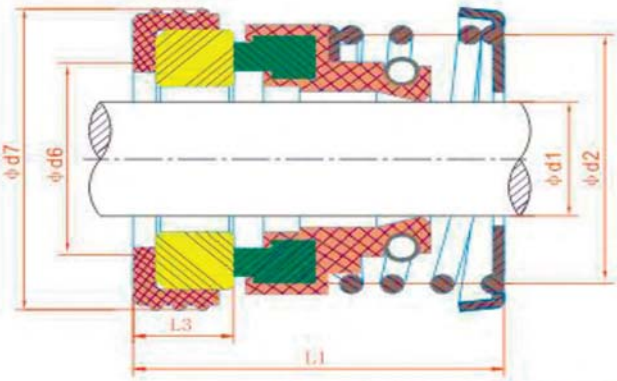

- Stationary Ring (Ceramic/SIC/TC)
- Rotary Ring (Carbon/ SIC/TC)
- Secondary Seal (NBR/ EPDM/VITON)
- Spring & Other Parts (SUS304/SUS316)

MODEL	d1	d2	d6	d7	L1	L3
TS156-8	8	16.0	13	18/21	18	7
TS156-9	9	20.0	16	21	23	7
TS156-10	10	20.0	16	20/22/24	23	7
TS156-11	11	20.0	16	24	23	7
TS156-12	12	22.5	17	26	24	7
TS156-13	13	22.5	17	26	24	7
TS156-14	14	24.5	21	28/30	25	7
TS156-15	15	24.5	21	28/30	25	7
TS156-16	16	28.5	22	32	27	8
TS156-17	17	28.5	22	32	27	8
TS156-18	18	31.5	25	35	29	8
TS156-19	19	31.5	25	35	29	8
TS156-20	20	33.5	27	38	31	8
TS156-22	22	34.5	29	40	32	8
TS156-25	25	37.5	32	44	33	9
TS156-28	28	40.5	34	46	34	9
TS156-30	30	44.5	38	50	35	9
TS156-32	32	47.5	40	54	37	9
TS156-35	35	50.5	44	58	40	10
TS156-38	38	53.5	46	60	42	10
TS156-40	40	56.5	48	64	43	10
TS156-45	45	61.5	52	66	45	10
TS156-50	50	66.5	58	72	47	10

TS 208

OPERATING LIMITS	Pressure	Speed	Temperature
	1.2MPa	10m/s	-30C°-200C°

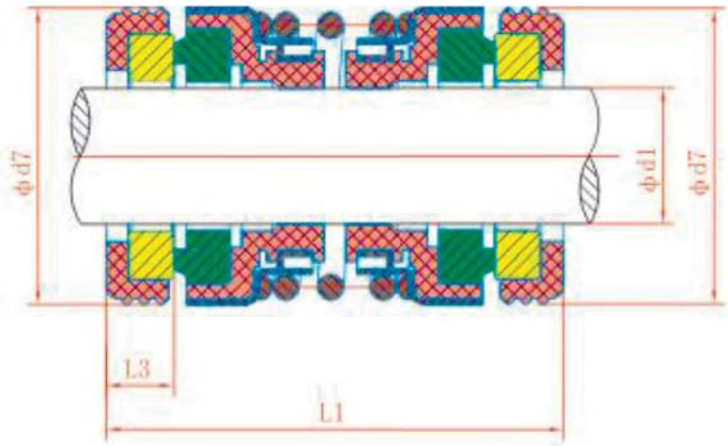

- Stationary Ring (Ceramic/SIC/TC)
- Rotary Ring (Carbon/Ceramic/SIC/TC)
- Secondary Ring (NBR/EPDM/VITON)
- Spring and Retainer(SUS304/SUS316)

Model	d1	d7	L1	L3
TS208-10	10	21	30	5.5
TS208-12	12	23	30	5.5
TS208-14	14	26/28	38	6.5
TS208-16	16	28/30	38	6.5
TS208-18	18	33/35	38	8.0
TS208-20	20	35/36	40	8.0
TS208-25	25	40/41	48	8.0
TS208-30	30	45	51	8.0
TS208-35	35	50	51	8.0
TS208-40	40	58	58	9.0
TS208-45	45	63	58	9.0

TS 301

OPERATING LIMITS	Pressure	Speed	Temperature
	0.6MPa	10m/s	-30C°-200C°

Model	d1	d3	d6	d7	L1	L3
TS301-6	6	18	8	18	14	4
TS301-8S	8	18	10	22	15	4
TS301-8M	8	20	10	22/26	15	4/5.5
TS301-8L	8	24	10	26	15	5.5
TS301-10	10	24	12	26	21	8
TS301-11	11	24	13	26	21	8
TS301-12	12	24	14	25/26	21	8
TS301-13	13	24	15	26	19.5	5.5/8
TS301-13L	13	28	16	28	21	8
TS301-13H	13	32	16	29.5	30.5	8
TS301-14	14	28	16	28/28.5	21	8
TS301-14L	14	32	16	29.5	21	8
TS301-15S	15	28	16	28.5/30	21	8
TS301-15M	15	32	16	30/29.5	21	8
TS301-15L	15	39	18	38	21	8
TS301-16S	16	28	16	29.5/30	21	8
TS301-16M	16	32	18	29.5	21	8
TS301-16L	16	39	18	38	21	8
TS301-16H	16	32	16	30	31	10
TS301-17	17	39	19	42	21	8
TS301-18	18	39	20	42	21	8
TS301-19	19	39	21	42	21	8
TS301-20	20	39	22	42	21	8
TS301-20L	20	42	24	45	23	10
TS301-22S	22	36	24	45	26.5	10
TS301-22L	22	42	24	45	23	10
TS301-23	23	47	25	50	23.5	10
TS301-24	24	47	26	50	23.5	10
TS301-25	25	42	27	50	23.5	10
TS301-25L	25	47	27	50	23.5	10
TS301-26	26	47	29	50	23.5	10
TS301-27	27	47	30	50	23.5	10
TS301-28	28	54	31	57	25	10
TS301-30	30	54	33	57	25	10
TS301-32	32	54	35	57	25	10
TS301-35	35	60	38	63	26	10
TS301-38	38	65	41	68	30	12
TS301-40	40	65	43	68	30	12
TS301-45	45	70	48	73	32	12
TS301-50	50	85	52	88	38	15
TS301-55	55	85	58	88	38	15
TS301-60	60	105	63	110	45	15

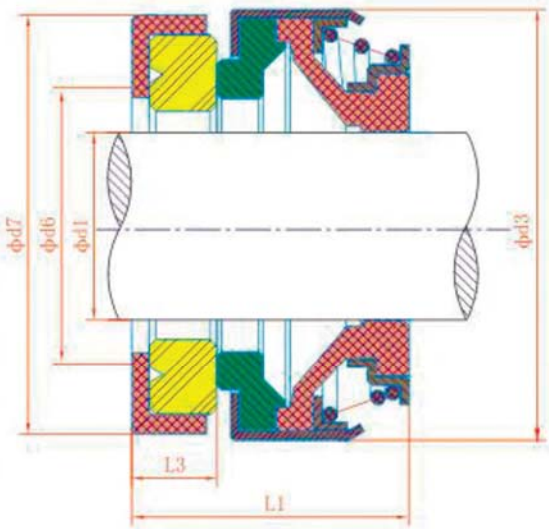

- Stationary Ring (Ceramic/SIC/TC)
- Rotary Ring (Carbon/ SIC/TC)
- Secondary Seal (NBR/ EPDM/VITON)
- Spring & Other Parts (SUS304/SUS316)

TS551B(TS551C)

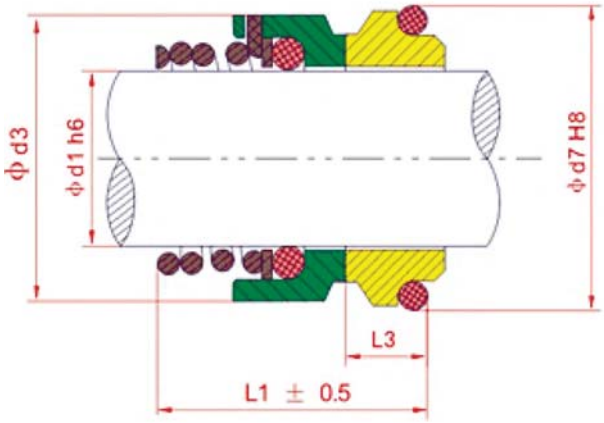

OPERATING LIMITS

- Pressure -1MPa
- Speed -10m/s
- Temperature -30C°-200C°

d (h7)	D1	D min	d7 (H8)	d6 (H11)	D3	d12 (H8)	L (±0.5)	L1 (±0.5)	L3
14	24	26	25	21	18	24.6	26.5	34	8.5
16	26	28	27	23	20	28	28	35.5	8.5
18	32	34	33	27	23	30	31	38.5	9
20	34	36	35	29	25	35	33.5	41	9
22	36	38	37	31	27	35	33	40.5	9
24	38	40	39	33	29	38	35	42.5	9
25	39	41	40	34	30	38	38	45.5	9
28	42	44	43	37	33	42	38	45.5	9
30	44	46	45	39	35	45	38	45.5	9
32	46	48	48	42	38	48	40	47.5	9
33	47	49	48	42	38	48	40	47.5	9
35	49	51	50	44	40	52	40	47.5	9
38	54	58	56	49	44	55	47.5	55.5	9
40	56	60	58	51	46	58	50	58	9
43	59	63	61	54	49	62	52.5	60.5	9
45	61	65	63	56	51	64	53.5	61.5	9
48	64	68	66	59	54	68.4	60	68	9
50	66	70	70	62	57	69.3	60	68	9
53	69	73	73	65	60	69.3	62	70	9
55	71	75	75	67	62	75.4	64	72	9
58	78	83	78	70	65	78.4	70	78	9
60	80	85	80	72	67	80.4	70	78	9
63	83	88	83	75	70	80.4	70	78	9
65	85	90	85	77	72	85.4	70	78	9
68	88	93	90	81	75	91.5	73	81	9
70	90	95	92	83	77	92	75	83	9
75	98	104	97	88	82	99	80	88	9
80	103	109	105	95	89	104	80	88	9

TS 560A

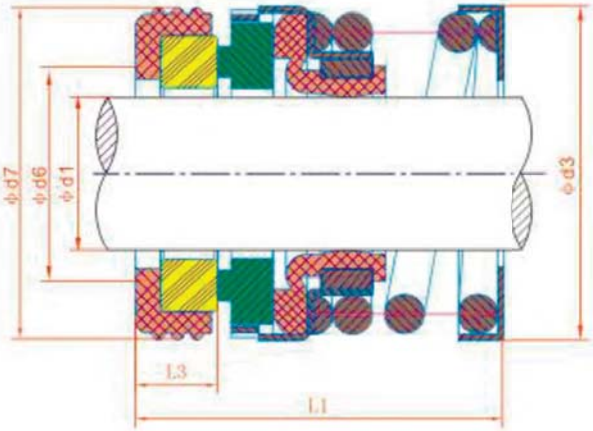

OPERATING LIMITS	Pressure	Speed	Temperature
	1MPa	12m/s	-30C°-200C°

Model	d1	d3	d6	d7	L1	L3
TS560A-10	10	23.5	16	24	25	7
TS560A-11	11	23.5	16	24	25	7
TS560A-12	12	26.0	17	26	25	7
TS560A-14	14	28.0	21	28	25.5	7
TS560A-15	15	30.0	21	28	29.5	7
TS560A-16	16	32.0	22	32	33.5	10
TS560A-18	18	32.5	25	35	36.5	10
TS560A-19	19	32.5	25	35	36.5	10
TS560A-20	20	35.5	27	38	38	10
TS560A-22	22	37.5	29	40	40.3	10
TS560A-25	25	42.0	32	44	39.3	10
TS560A-28	28	45.5	34	46	40	10
TS560A-30S	30	46	35	45	38.2	7.5
TS560A-30L	30	48.0	38	50	40	10
TS560A-32	32	50.0	40	54	40	10
TS560A-35	35	54.5	44	58	42	10
TS560A-38	38	58.5	46	60	42.6	10
TS560A-40	40	62.5	48	64	42.6	10
TS560A-45	45	66.5	52	66	45	10
TS560A-50	50	72.5	58	72	54.6	10
TS560A-55S	55	72	60	75	59.4	12
TS560A-55L	55	76	60	78	59.8	12
TS560A-60	60	80	65	80	63	12
TS560A-65	65	85	70	85	64	13
TS560A-70	70	92	75	92	60	11.0

- Stationary Ring (Ceramic/SIC/TC)
- Rotary Ring (Carbon/ SIC/TC)
- Secondary Seal (NBR/ EPDM/VITON)
- Spring & Other Parts (SUS304/SUS316)

Model	d1	d3	d6	d7	L1	L3
TS560A-3/8"	9.525	23.5	14.3	22.225	28.6	6.4
TS560A-1/2"	12.700	26.0	17.5	25.400	28.6	6.4
TS560A-5/8"	15.875	30.0	20.6	31.750	32.5	8.7
TS560A-3/4"	19.050	32.5	23.8	34.925	32.5	8.7
TS560A-7/8"	22.225	37.5	27.0	38.100	34.1	8.7
TS560A-1"	25.400	44.0	30.2	41.275	36.5	9.5
TS560A-11/8"	28.575	48.0	33.3	44.450	38.1	9.5
TS560A-11/4"	31.750	50.0	36.5	47.625	38.1	9.5
TS560A-13/8"	34.925	54.5	39.7	50.800	39.7	9.5
TS560A-11/2"	38.100	58.5	42.9	53.975	39.7	9.5
TS560A-15/8"	41.275	64.0	46.0	60.325	47.6	11.1
TS560A-13/4"	44.450	67.0	49.2	63.500	47.6	11.1
TS560A-17/8"	47.625	71.0	52.4	66.675	50.8	11.1
TS560A-2"	50.800	73.5	55.6	69.850	50.8	11.1
TS560A-21/4"	57.150	78.40	65.0	79.38	57.16	13.5
TS560A-21/2"	63.500	84.90	70.0	85.73	60.3	13.5

TS 560D

OPERATING LIMITS	Pressure	Speed	Temperature
	0.3MPa	10m/s	-30C°-200C°

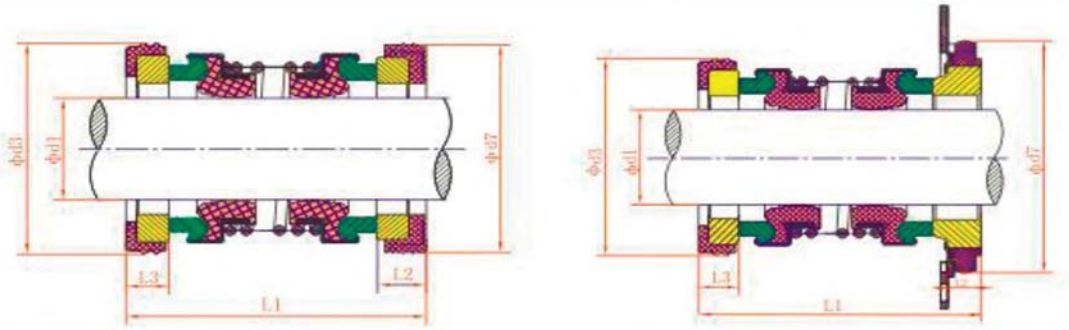

- Stationary Ring (Ceramic/SIC/TC)
- Rotary Ring (Carbon/SIC/TC)
- Secondary Ring (NBR/EPDM/VITON)
- Spring and Other Parts (SUS304/SUS316)

Model	d1	d3	d7	L1	L2	L3
TS560D-13	13	25	25	36	5	5
TS560D-14	14	30	30	37	5	5
TS560D-15	15	30	30	37	5	5
TS560D-16	16	30	30	37	5	5
TS560D-18	18	35	38	49	7	10
TS560D-19	19	35	38	49	7	10
TS560D-20	20	38	44	49	7	7
TS560D-25	25	44	50	51	7	7
TS560D-30	30	50	57	59	9.	8
TS560D-35	35	58	64	61	9	9
TS560D-40	40	64	70	64	11	9
TS560D-45	45	66	70	65	10	9
TS560D-50	50	72	80	69	10	9

TS 580

OPERATING LIMITS	Pressure	Speed	Temperature
	2.8MPa	13m/s	-30C°-200C°

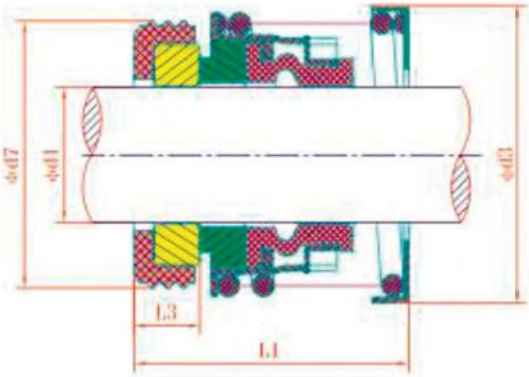

- Stationary Ring (Ceramic/SIC/TC)
- Rotary Ring (Carbon/ SIC/TC)
- Secondary Seal (NBR/ EPDM/VITON)
- Spring & Other Parts (SUS304/SUS316)

Equivalent to John crane type 2 with " N " seat or " WM " seat also can be provided

Model	d1	d3	d7	L1	L3
TS580-3/8"	9.525	28.0	24.600	33.7	8.7
TS580-1/2"	12.700	32.0	27.800	33.7	8.7
TS580-5/8"	15.875	35.0	30.950	35.3	10.3
TS580-3/4"	19.050	40.0	34.150	35.3	10.3
TS580-7/8"	22.225	43.0	37.300	35.3	10.3
TS580-1"	25.400	47.0	40.500	36.9	11.9
TS580-1 1/8"	28.575	56.0	47.650	44.9	11.9
TS580-1 1/4"	31.750	59.0	50.800	44.9	11.9
TS580-1 3/8"	34.925	63.0	54.000	44.9	11.9
TS580-1 1/2"	38.100	67.0	57.150	44.9	11.9
TS580-1 5/8"	41.275	71.0	60.350	44.9	11.9
TS580-1 3/4"	44.450	74.0	63.500	52.9	11.9
TS580-1 7/8"	47.625	77.0	66.700	52.9	11.9
TS580-2"	50.800	81.0	69.850	54.5	13.5
TS580-2 1/8"	53.970	84.0	73.050	54.5	13.5
TS580-2 1/4"	57.150	88.0	76.200	54.5	13.5
TS580-2 3/8"	60.320	91.0	79.400	54.5	13.5
TS580-2 1/2"	63.500	94.0	82.550	54.5	13.5

TS 580B

OPERATING LIMITS	Pressure	Speed	Temperature
	2.8MPa	13m/s	-30C°-200C°

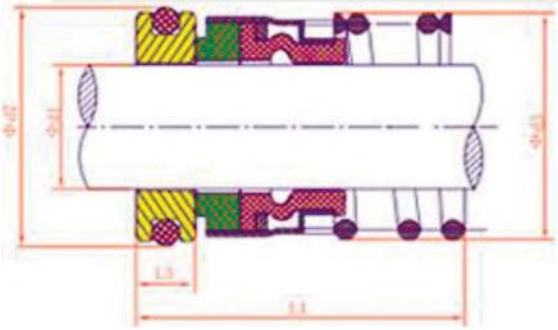

- Stationary Ring (Ceramic/SIC/TC/SUS304)
- Rotary Ring (Carbon/ SIC/TC)
- Secondary Seal (NBR/ EPDM/VITON)
- Spring & Other Parts (SUS304/SUS316)

Equivalent to John crane type 1A with " W " seat or " WM " seat also can be provided

Model	d1	d3	d7	L1	L3
TS580B-14	14.0	29.0	25.0	52.0	8.0
TS580B-16	16.0	29.0	27.0	52.0	8.0
TS580B-18	18.0	32.0	33.0	52.0	8.0
TS580B-19	19.0	32.0	35.0	52.0	8.0
TS580B-20	20.0	33.0	37.0	52.0	8.0
TS580B-24	24.0	38.0	39.0	52.0	8.0
TS580B-25	25.0	38.0	40.0	52.0	8.0
TS580B-28	28.0	46.0	43.0	69.0	9.0
TS580B-30	30.0	49.0	45.0	69.0	9.0
TS580B-32	32.0	49.0	48.0	69.0	9.0
TS580B-35	35.0	52.0	50.0	70.0	10.0
TS580B-38	38.0	56.0	56.0	70.0	10.0
TS580B-40	40.0	59.0	58.0	70.0	10.0
TS580B-45	45.0	62.0	63.0	81.0	10.0
TS580B-48	48.0	65.0	66.0	81.0	10.0
TS580B-50	50.0	68.0	70.0	81.0	10.0
TS580B-55	55.0	75.0	75.0	83.0	12.0
TS580B-60	60.0	78.0	80.0	83.0	12.0
TS580B-65	65.0	86.0	85.0	83.0	12.0

TS 960

OPERATING LIMITS	Pressure	Speed	Temperature
	1.2MPa	15m/s	-30C°-200C°

Model	d1	d3	d7	L1	L3
TS960-14	14	24.5	25	35	8
TS960-16	16	26.8	27	35	8
TS960-18	18	31.8	33	37.5	10
TS960-20	20	32.5	35	37.5	10
TS960-22	22	36.5	37	37.5	10
TS960-24	24	38.8	39	40	10
TS960-25	25	38.8	40	40	10
TS960-28	28	46.5	43	42.5	10
TS960-30	30	46.5	45	42.5	10
TS960-32	32	46.5	48	42.5	10
TS960-33	33	49.5	48	42.5	10
TS960-35	35	49.5	50	42.5	11
TS960-38	38	54	56	45	11
TS960-40	40	57	58	45	11
TS960-43	43	61.5	61	45	11
TS960-45	45	61.5	63	45	11
TS960-48	48	70.6	66	45	11
TS960-50	50	70.6	70	47.5	11
TS960-53	53	70.6	73	47.5	12
TS960-55	55	76	75	47.5	12
TS960-58	58	79.6	78	52.5	12
TS960-60	60	79.6	80	52.5	12
TS960-63	63	84.6	83	52.5	12
TS960-65	65	84.6	85	52.5	13

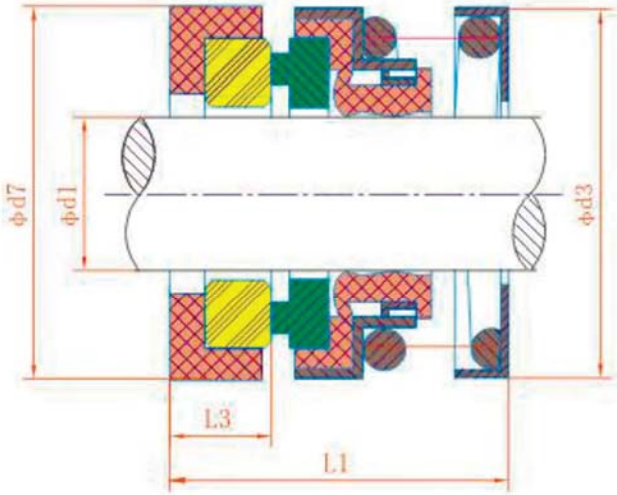

- Stationary Ring (Ceramic/SIC/TC)
- Rotary Ring (Carbon/ SIC/TC)
- Secondary Seal (NBR/ EPDM/VITON)
- Spring & Other Parts (SUS304/SUS316)

TS 1500

	Pressure	Speed	Temperature
OPERATING LIMITS	TS1527 TS1528 0-1MPa TS1523 TS1524 <3MPa	<15m/s	-20C°-180C°

TS 1500

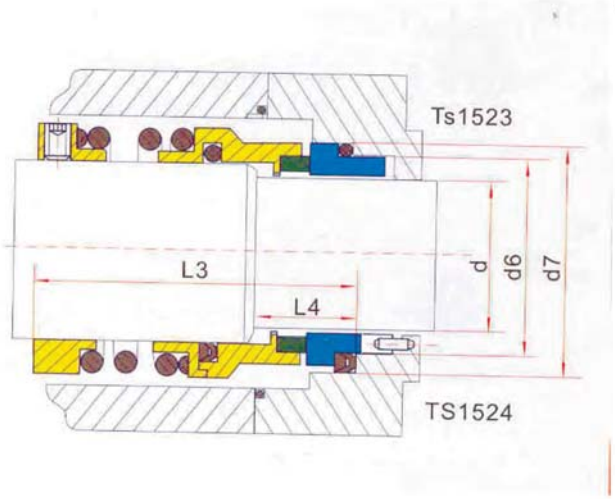

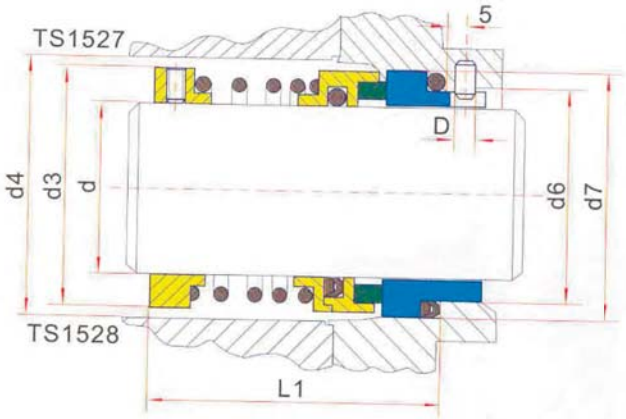

d (h7)	d3	d4 min	d7 (h8)	d6 (h11)	D (h8)	L3 (±0,5)	L1 (±0,5)	L4
20	34	36	35	29	3	53,5	45	20
25	39	41	40	34	3	53,5	50	20
30	44	46	45	39	3	57,5	50	20
35	49	51	50	44	3	57,5	55	20

TS BIA

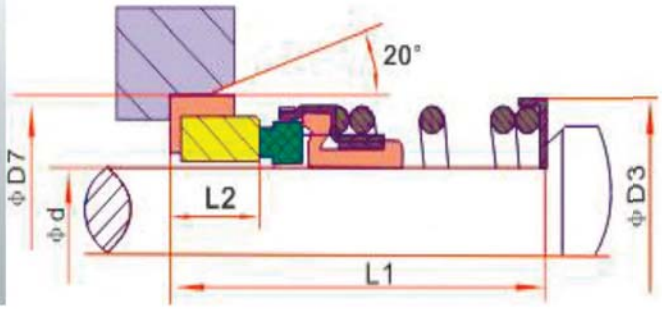

OPERATING LIMITS	Pressure	Speed	Temperature
	1.0MPa	10m/s	-30C°-200C°

- Stationary Ring (Ceramic/SIC/TC)
- Rotary Ring (Carbon/ SIC/TC)
- Secondary Seal (NBR/ EPDM/VITON)
- Spring & Other Parts (S.S/SUS304/SUS316)

Model	d	D3	D7	L1	L2
TSBIA-14	14	27	30	23.7	5
TSBIA-16	16	28.5	32	26	5
TSBIA-18	18	30.5	35	30	7.5
TSBIA-20	20	31.5	35	29	8
TSBIA-25	25	39	40	33.5	8
TSBIA-28	28	42	43	33.5	8
TSBIA-30	30	44	45	34.5	9
TSBIA-32	32	46	48	42.5	9
TSBIA-33	33	47	48	42.5	9
TSBIA-35	35	49	50	42.5	9
TSBIA-38	38	54	56	42.5	9
TSBIA-40	40	56	58	42.5	9
TSBIA-43	43	59	61	46	9.5
TSBIA-45	45	61	63	47.5	9.5
TSBIA-48	48	64	66	47.5	9.5
TSBIA-50	50	66	70	47.5	9.5
TSBIA-53	53	69	73	50.5	9.5
TSBIA-55	55	71	75	50.5	9.5
TSBIA-58	58	78	78	51.5	9.5
TSBIA-60	60	80	80	51.5	9.5
TSBIA-70	70	90	92	56	11

TS CG

OPERATING LIMITS	Pressure	Speed	Temperature
	1.0MPa	10m/s	-30C°-200C°

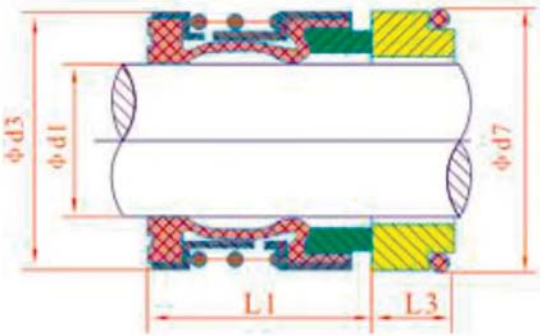

- Stationary Ring (Ceramic/SIC/TC)
- Rotary Ring (Carbon/ SIC/TC)
- Secondary Seal (NBR/ EPDM/VITON)
- Spring & Other Parts (SUS304/SUS316)

Equivalent to John crane type 2100 with " BO ' seat or " G60 " seat also can be provided

Model	d1	d3	d7	L1	L3
TSCG-16	16	26	27	15	12
TSCG-18	18	32	33	20	13.5
TSCG-20	20	34	35	20	13.5
TSCG-22	22	36	37	20	13.5
TSCG-24	24	38	39	20	13.3
TSCG-25	25	39	40	20	13
TSCG-28	28	42	43	26	12.5
TSCG-30	30	44	45	26	12
TSCG-32	32	46	48	26	12
TSCG-33	33	47	48	26	12
TSCG-35	35	49	50	26	12
TSCG-38	38	54	56	30	13
TSCG-40	40	56	58	30	13
TSCG-43	43	59	61	30	13
TSCG-45	45	61	63	30	13
TSCG-48	48	64	66	30	13
TSCG-50	50	66	70	30	13.5
TSCG-53	53	69	73	30	13.5
TSCG-55	55	71	75	30	13.5
TSCG-60	60	80	80	33	13.5
TSCG-65	65	85	85	33	13.5
TSCG-70	70	90	92	33	14.5
TSCG-75	75	99	97	40	14.5

TS F

OPERATING LIMITS	Pressure	Speed	Temperature
	0.6MPa	15m/s	-30C°-200C°

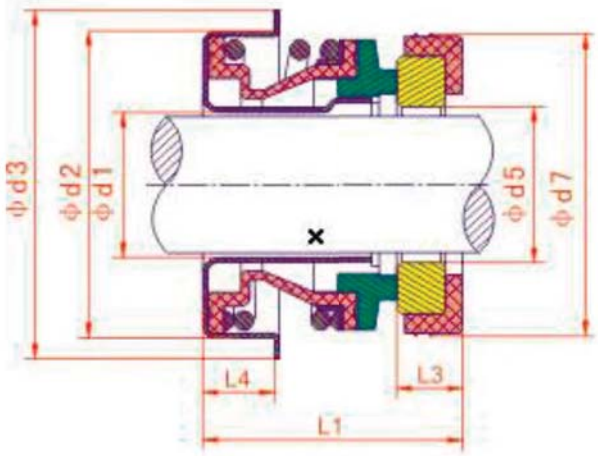

- Rotary Ring (Ceramic/SIC/TC)
- Stationary Ring (Carbon/ SIC/TC)
- Secondary Seal (NBR/ EPDM/VITON)
- Spring & Other Parts (SUS304/SUS316)

Model	Shaft	d1	d2	d3	d5	d7	L1	L3	L4
TSF-10	10	11.0	24	29	12	23	17	4	7
TSF-12S	12	14.2	28.55	32	14	25	18.2	5	8
TSF-12M	12	14.2	30	35	15	24/23	18	5	8
TSF-12L	12	14.2	33.4	38	14	25	18	5	6.7
TSF-16	16	18.2	36.45	41.5	18	31	19.8	5	8
TSF-16L	16	18.2	38.1	43.5	18	31	19.8	5	8
TSF-16LD	16	18.2	38.1	43.5	18	31	19.8	5	8
TSF-20S	20	21.2	38	43.8	21	35	20.5	5	9.5
TSF-20	20	21.2	40	43.8	21	35	20.5	5	9.5
TSF-25S	25	26.4	46	51	26	44	25	7	10
TSF-25	25	26.4	47	51	26	44	25	7	12
TSF-25L	25	26.4	52	57	27	48	25	7	12
TSF-30	30	31.0	52	57	32	48	27	8	11
TSF-1/2 "	12.7	14.2	30	35	13.5	25.4	19.2	6.2	8
TSF-5/8 "	15.875	18.2	36.45	41.5	17.5	31.75	25	10.3	8
TSF-3/4 "	19.05	21.2	40	43.8	20	34.925	25.8	10.3	9.5
TSF-1 "	25.4	26.4	47	51	27	41.275	29	11.1	12

TS FB

OPERATING LIMITS	Pressure	Speed	Temperature
	0.6MPa	15m/s	-30C°-200C°

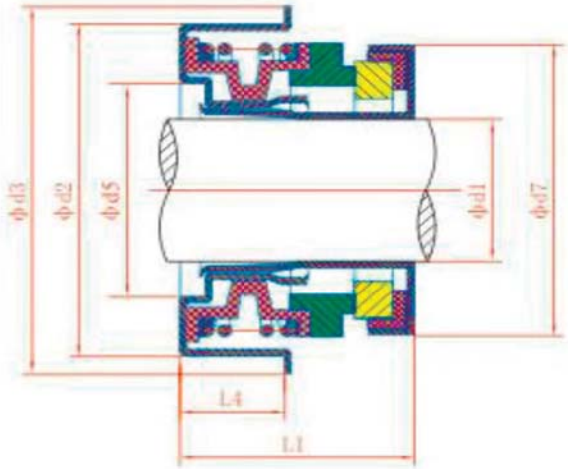

- Rotary Ring (Ceramic/SIC/TC)
- Stationary Ring (Carbon/ SIC/TC)
- Secondary Seal (NBR/ EPDM/VITON)
- Spring & Other Parts (SUS304/SUS316)

Model	d1	d2	d3	d5	d7	L1	L4
TSFB-12S	12	28.55	32.0	18.5	25/26	17.5	8
TSFB-12M	12	30.00	35.0	18.5	25/26	17.5	8
TSFB-12L	12	33.4	38	18.5	25/26	17.5	6.7
TSFB-13	13	30	35	18.5	25/26	18	8
TSFB-15	15	36.45	41.5	22.5	30.5	20.5	8
TSFB-16	16	36.45	41.5	22.5	30.5	20.5	8
TSFB-16B	16	36.45	41.5	22.5	28	20	8.5
TSFB-16T	16	36.45	41.5	19.3	31.5	20.5	9
TSFB-16L	16	38.10	43.5	22.5	30.5	20.5	8
TSFB-16LD	16	38.1	43.5	22.5	28.5	20.5	8
TSFB-20	20	38/40	43.8	26.5	37	22	9.5
TSFB-20T	20	40	43.8	28	37	22	9.5

TS FBW

OPERATING LIMITS	Pressure	Speed	Temperature
	0.6MPa	15m/s	-30C°-200C°

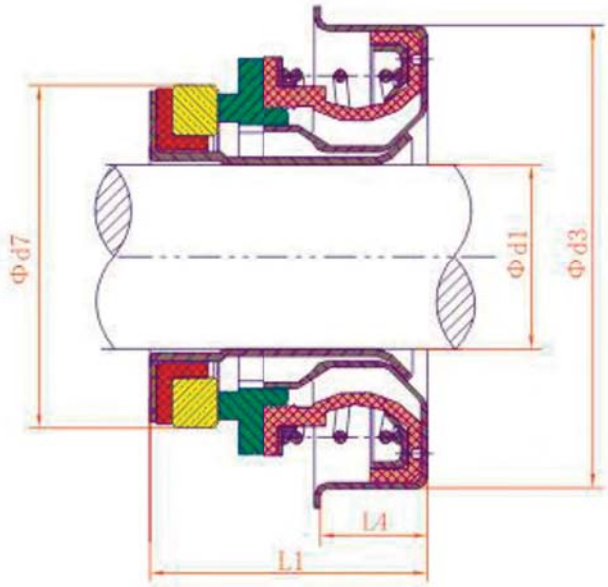

- Rotary ring (Ceramic/SIC/TC)
- Stationary ring (Carbon/SIC/TC)
- Secondary seal (NBR/EPDM/VITON)
- Spring & other parts (SUS304/SUS316)

Model	d1	d3	d7	L1	L4
TSFBW-12M	12.0	30.0	24.0	20.0	7.5
TSFBW-15	15.0	36.5	29.0	19.9	8.7
TSFBW-16	16.0	36.5	29.0	19.9	8.7
TSFBW-16L	16.0	38.1	29.0	19.8	8.5
TSFBW-20	20.0	40.0	34.0	20.0	9.5
TSFBW-1/2 " A	12.7	30	28.5	14.7	7
TSFBW-16A	16	36.5	32.5	19.4	8

TS FN

OPERATING LIMITS	Pressure	Speed	Temperature
	0.4MPa	5m/s	-30C°-200C°

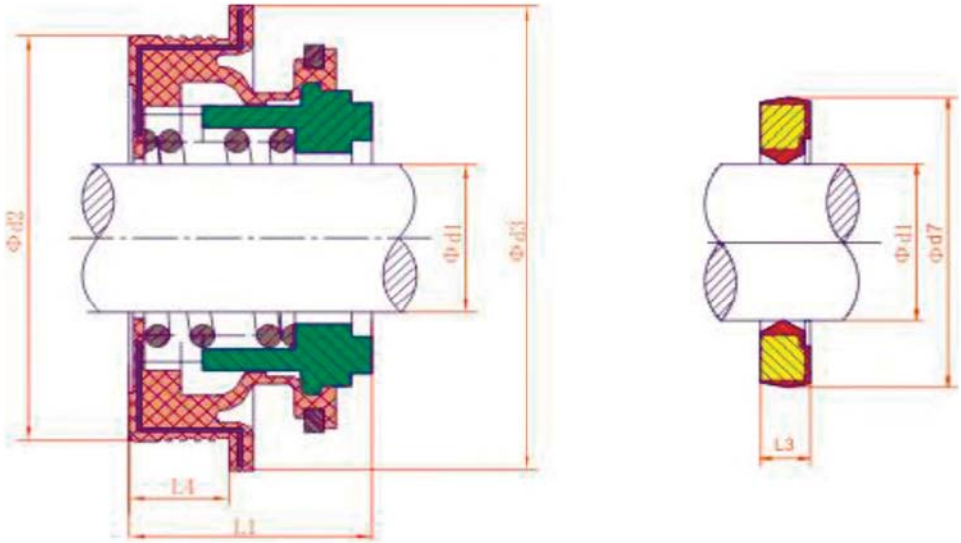

●	Bellows	NBR/EPDM/VITON
●	Spring	65Mn/SUS304/SUS316
●	Drive ring	A3
●	Stationary ring	Carbon/SIC/TC
●	Rotary ring	Ceramic /SIC/TC
●	Rotary ring holder	NBR/EPDM/VITON

Model	d1	d2	d3	d7	L1	L3	L4
TSFN-12M	12	30	34.6		15.5		7.0
TSFN-12L	12	33.4	36.6		15.5		7.0
TSFN-16	16	36.5	42.6	28	16.5	4.5	7.5
TSFN-16L	16	38.1	42.6	28	16.5	4.5	7.5
TSFN-16B	16	36.5	39.7	28.6	16.5	3.5	7
TSFN-20	20	40	42		18.5		11

TS G

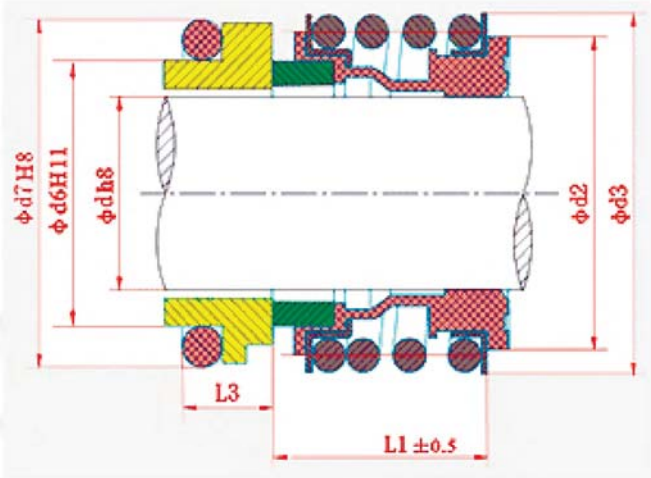

OPERATING LIMITS	Pressure	Speed	Temperature
	1.2MPa	12m/s	-20C°+180C°

d	d2	d3	d7	L1	L3
8	17.5	19	18.2	14.5	5.6
10	20.5	22.5	19.2	14.5	6.6
12	22.5	25	21.6	15	5.6
14	26.5	28.5	24.6	17	5.6
15	26.5	28.5	24.6	17	6.6
16	26.5	28.5	28	17	7.5
18	29	32	30	19.5	8
19	33	37	35	21.5	7.5
20	33	37	35	21.5	7.5
22	33	37	35	21.5	7.5
24	38	42.5	38	22.5	7.5
25	38	42.5	38	23	7.5
28	44	49	42	26.5	9
30	44	49	45	26.5	10.5
32	46	53.5	48	27.5	10.5
33	46	53.5	50	27.5	11
35	50	57	52	28.5	11
38	53	59	55	30	10.3
40	55	62	58	30	10.8
42	58	65.5	62	30	12
43	58	65.5	62	30	12
45	60	68	64	30	11.6
48	63	70.5	68.4	30.5	11.6
50	65	74	69.3	30.5	11.6
53	70	78.5	72.3	33	12.3
55	72	81	75.4	35	13.3
58	75	85.5	78.4	37	13.3
60	79	85.5	80.4	38	13.3
65	84	93.5	85.4	40	13
68	88	96.5	91.5	40	13
70	90	99.5	92	40	13.7
75	95	107	99	40	14
80	100	112	104	40	15
85	107	120	109	41	14.8
90	114	127	114	45	14.8
95	119	132	120	46	15.8
100	124	137	123	47	15.8

TS G2

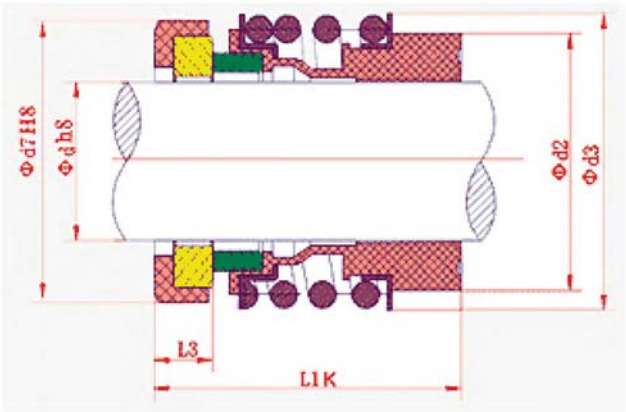

OPERATING LIMITS	Pressure	Speed	Temperature
	1.2MPa	12m/s	-20C°-180C°

d	d2	d3	d7	L1K	L3
10.0	20.5	22.5	21.0	32.5	6.6
12.0	22.5	25.0	23.0	32.5	6.6
14.0	26.5	28.5	25.0	35.0	6.6
16.0	26.5	28.5	27.0	35.0	6.6
18.0	29.0	32.0	33.0	37.5	7.5
20.0	33.0	37.0	35.0	37.5	7.5
22.0	33.0	37.0	37.0	37.5	7.5
24.0	38.0	42.5	39.0	40.0	7.5
25.0	38.0	42.5	40.0	40.0	7.5
28.0	44.0	49.0	43.0	42.5	7.5
30.0	44.0	49.0	45.0	42.5	7.5
32.0	46.0	53.5	48.0	42.5	7.5
33.0	46.0	53.5	48.0	42.5	7.5
35.0	50.0	57.0	50.0	42.5	7.5
38.0	53.0	59.0	56.0	45.0	9.0
40.0	55.0	62.0	58.0	45.0	9.0
43.0	58.0	65.5	61.0	45.0	9.0
45.0	60.0	68.0	63.0	45.0	9.0
48.0	63.0	70.5	66.0	45.0	9.0
50.0	65.0	74.0	70.0	47.5	9.5
53.0	70.0	78.5	73.0	47.5	11.0
55.0	72.0	81.0	75.0	47.5	11.0
58.0	75.0	85.5	78.0	52.5	11.0
60.0	79.0	88.5	80.0	52.5	11.0
65.0	84.0	93.5	85.0	52.5	11.0
68.0	88.0	96.5	90.0	52.5	11.3
70.0	90.0	99.5	92.0	60.0	11.3
75.0	95.0	107.0	97.0	60.0	11.3
80.0	100.0	112.0	105.0	60.0	12.0
85.0	107.0	120.0	110.0	60.0	14.0
90.0	114.0	127.0	115.0	65.0	14.0
95.0	119.0	132.0	120.0	65.0	14.0
100.0	124.0	137.0	125.0	65.0	14.0

TS H

OPERATING LIMITS	Temperature	Pressure	Speed
	-20C°-180C°	<2.5MPa	<20m/s

Medium:Liquid rich in solid impurity or high viscosity,such as refine sugar,sewage and paper industry.

Design Reatures:

a.Single face, balanced.

b.Conform to the DIN24960 and GB6556 standards.

c.Equivalent to Durgmann HJ92N

d	d3	d6	d7	D8	L1k
20	34	29	35	3	37,5
25	39	34	40	3	40
30	44	39	45	3	42,5
35	49	44	50	3	42,5
40	56	51	58	4	45
45	61	56	63	4	45

TS H

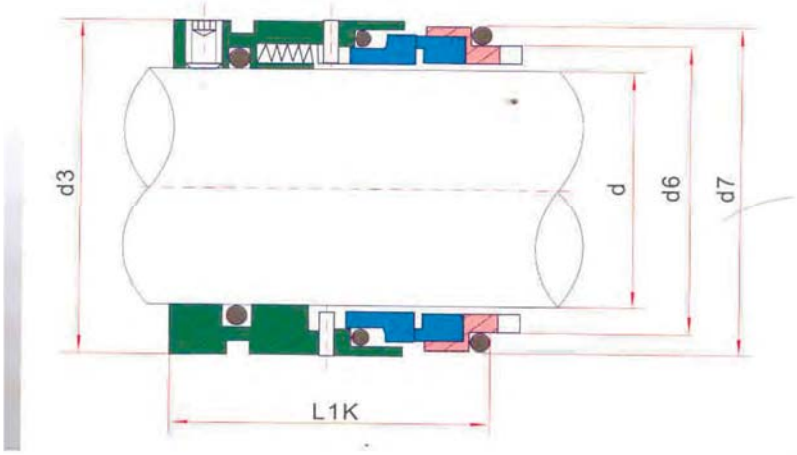

TS M74 TS H75

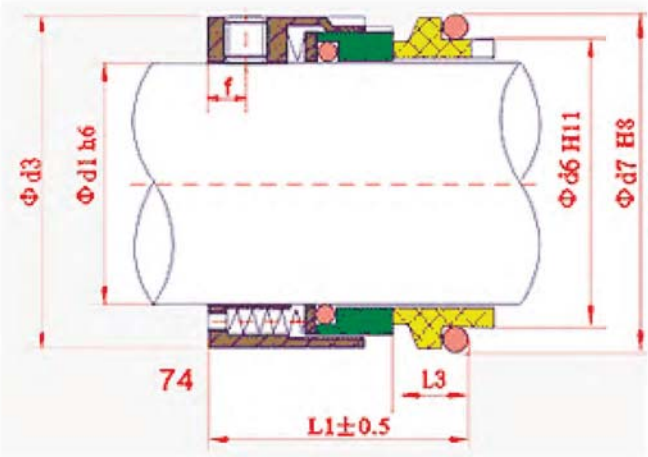

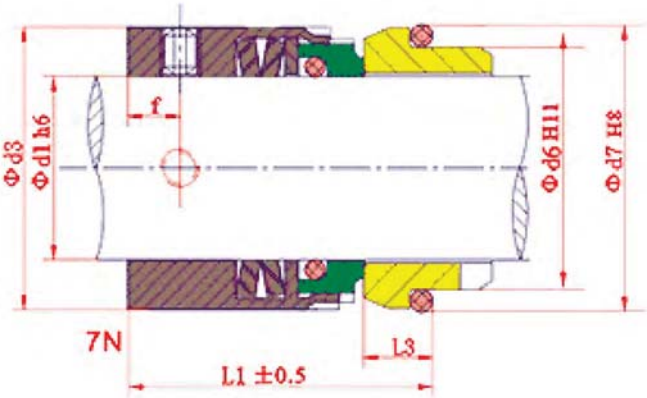

OPERATING LIMITS	Pressure	Speed	Temperature
	1.6MPa	20m/s	-30C°-200C°

d1****	d3	d6	d7	L1	L3	f
мм	мм	мм	мм	мм	мм	мм
25	40	34	40	40	11,5	8
28	43	37	43	42,5	11,5	8
30	45	39	45	42,5	11,5	8
32	47	42	48	42,5	11,5	8
33	48	42	48	42,5	11,5	8
35	50	44	50	42,5	11,5	8
38	55	49	56	45	14	8
40	57	51	58	45	14	8
43	60	54	61	45	14	8
45	62	56	63	45	14	8
48	65	59	66	45	14	8
50	67	62	70	47,5	15	8
53	70	65	73	47,5	15	8
55	72	67	75	47,5	15	8
58	79	70	78	52,5	15	9
60	81	72	80	52,5	15	9
63	84	75	83	52,5	15	9
65	86	77	85	52,5	15	9
68	89	81	90	52,5	18	9
70	91	83	92	60		

TS T

OPERATING LIMITS	Pressure	Speed	Temperature
	0.6MPa	10m/s	-30C°-200C°

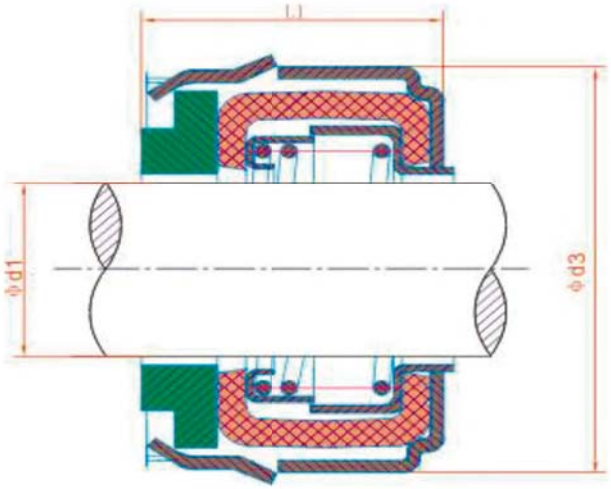

- Stationary Ring (Carbon/SIC/TC)
- Secondary Seal (NBR/ EPDM/VITON)
- Spring (65Mn/SUS304)
- Other Parts (Copper/SUS304/A3)

Model	d1	d3	L1
TST-08	16	36.5	16.5
TST-08S	16	33.4	14.5
TST-04	20	43	18
TST-02S	25	51	25.5
TST-02M	25	52	23
TST-02L	25	52.5/52	29

TB GF04

dimension: 12mm/16mm

Rotary Ring Carbon (TC)

Stationary Ring (TC)

Secondary Seal(NBR/EPDM/VITON)

Spring &Other Parts(SUS304/SUS316)

TB GF03 Long

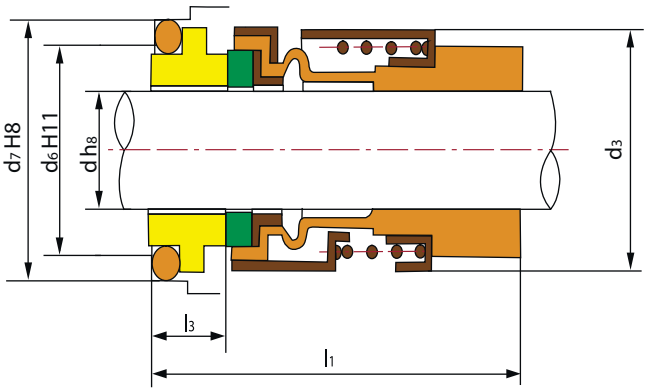

- Rotary Ring(SiC/TC)
- Stationary Ring(Carbon/SiC/TC)
- Secondary Seal(NBR/EPDM/VITON)
- Retainer(SUS304/SUS316)
- Spring(SUS304/SUS316)

Seal size d(mm)	d_3	d_6	d_7	l_1	l_3
12	22	19	23	39.0	7.6
12A	22	19	23	34.0	7.6
15	26	23	27	39.0	8.7
16	26	23	27	39.0	8.7

Sealcon	Johncrane-1	Burgmann-2	AES-3	Roten-4	Depac-5	Flowserve-6	Chesterton-7	Other-9
R22		MG12						
R23		MG13						
R24		560						
R25		MG9						
R26		BT-AR						
R91								BIA
R92								20
R93								24
T11	10T							
T12	10R							
S11	5610							
S12	5615							
S13	5860							
S14	SB1							
S15	SE1							
S16	JCS1							
S17	SBW							
S21		Cartex SN						
S21Q		Cartex QN						
S22		Unitex						
S31			CON II					
S32			SCUSI					
S33			CURC					
S51					270			
D11	SE2							
D12	SE2C							
D13	SL							
D14	SAF							
D15	SB2							
D16	JCS2							
D17	SAB							
D21		Cartex D						
D31			CDSA					
D51					321			
D52					322			

Sealcon	Johncrane-1	Burgmann-2	AES-3	Roten-4	Depac-5	Flowserve-6	Chesterton-7	Other-9
D53					365			
J11	BO							
J12	BP							
J13	N							
J14	W							
J15	WM							
J16	M							
J17	BD							
J18	CE							
J19	YG							
J110	NG							
J111	AG							
J112	BS							
J113	PG							
J114	BC							
J115	WG							
J116	V							
J117	U							
J21		G115						
J22		G13						
J23		G16						
J24		G4						
J25		G50						
J26		G55						
J27		G60						
J28		G6						
J29		G606						
J210		G9						
J211		G9A						
J212		G24						
J31		C15(443)						
J41				C05				
J42				C19				
J91								1527 seat

Sealcon	Johncrane-1	Burgmann-2	AES-3	Roten-4	Depac-5	Flowserve-6	Chesterton-7	Other-9
M10	215							
M11	604							
M12	606							
M13	609							
M14	670							
M15	676							
M16	680							
M17	515E							
M21		MFL85N						
M22		MFLWT80						
N11	109							
N12	109B							
N13	58U							
N14	58B							
N15	59U							
N16	59B							
N17	8							
N18	8T							
N19	8B							
N110	8BT							
N111	9							
N112	9T							
N113	9B							
N114	9BT							
N21		H10						
N22		H12N						
N23		M2N						
N24		M3N						
N25		M7N						
N26		M74						
N27		M74F						
N28		M74D						
N29		H7N						
N210		H75						

Sealcon	Johncrane-1	Burgmann-2	AES-3	Roten-4	Depac-5	Flowserve-6	Chesterton-7	Other-9
N212		H74D						
N213		HJ92N						
N31			SAI					
N41				Roten 2				
N42				Uniten 2				
N43				Roten 3				
N44				Uniten 3				
N45				Roten 45				
N46				Uniten 45				
N47				Roten 5				
N48				Roten 7				
N48U				Uniten 7				
N49				Roten 7K				
N49U				Uniten 7K				
N410				Roten 82				
N411				Roten 84				
N71							C891	
N81								
N91								1527
N92								Pillar US1
N93								Pillar US2
N94								Pillar US3
R11	JC1							
R12	JC6							
R13	JC16							
R14	JC2							
R15	2100S							
R16	2100K							
R17	2100N							
R18	21							
R19	502							
R110	521							
R20		MG1S20						
R21		MG1						